AD-A210 452

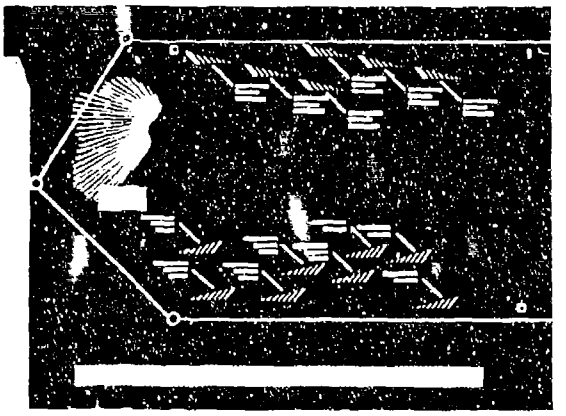

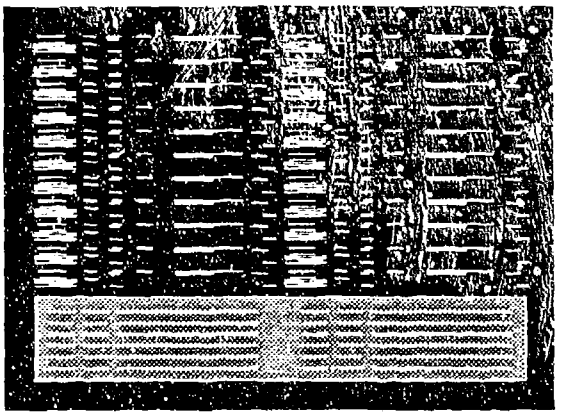

FAA AIR TRAFFIC CONTROL OPERATIONS CONCEPTS

Volume IV: TAAS Terminal Controllers

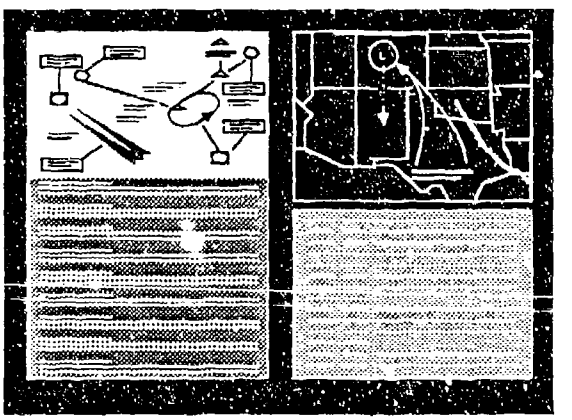

JUL 21 1989
B

6 July 1987

Change 1, 29 July 1988

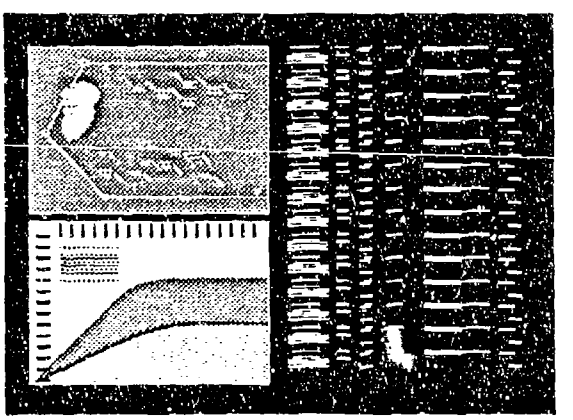

DOT/FAA/AP-87-01

U.S. Department of Transportation
Federal Aviation Administration

DISTRIBUTION STATEMENT A
Approved for public release;
Distribution Unlimited

89

FAA AIR TRAFFIC CONTROL OPERATIONS CONCEPTS

VOLUME IV: TAAS TERMINAL CONTROLLERS

CDRL B112, VOL. IV

CONTRACT DTF-A01-85-Y-01034

Prepared For:

FAA/AAP 100
Federal Aviation Administration
DOT, 800 Independence Avenue, S.W.
Washington, DC 20591

6 July 1987

CHANGE 1, 29 July 1988

Prepared By:

COMPUTER TECHNOLOGY ASSOCIATES, INC.
7150 Campus Drive, Suite 100
Colorado Springs, CO 80920
(719) 590-5100

Technical Report Documentation Page

1. Report No.	2. Government Accession No.	3. Recipient's Catalog No.
DOT/FAA/AP-87-01		

4. Title and Subtitle	5. Report Date
FAA Air Traffic Control Operations Concepts Volume IV: TAAS Terminal Controllers (CHG 1)	29 July 1988
	6. Performing Organization Code
7. Author(s) J.R. Alexander, V.L. Alley, H.L. Ammerman, W.S. Fairhurst, C.M. Hostetler, and G.W. Jones	8. Performing Organization Report No. CDRL B112, Volume IV (CHG 1)
9. Performing Organization Name and Address Computer Technology Associates, Inc. 7150 Campus Drive, Suite 100 Colorado Springs, CO 80920	10. Work Unit No. (TRAIS)
	11. Contract or Grant No. DTF-A01-85-Y-010304
	13. Type of Report and Period Covered Final of Change 1
12. Sponsoring Agency Name and Address FAA/AAP 100 Federal Aviation Administration DOT, 800 Independence Avenue, S.W. Washington, DC 20591	14. Sponsoring Agency Code AAP-100

15. Supplementary Notes

Change pages to original edition dated 6 July 1987

16. Abstract

This submission updates Volume IV to the latest Acquisition Phase specification for TAAS, and includes corrections and improvements as necessary.

This volume is one of a series of operations concepts for the FAA's Advanced Automation System (AAS). It describes how terminal controllers in TRACON facilities may perform their operational jobs in the Terminal Advanced Automation System (TAAS) environment. TAAS functionality is assumed to be as described in the AAS System Level Specification, 28 August 1987.

Included here are: Composition Graphs, showing the logical flow of operational tasks performed in response to or anticipation of external Air Traffic Events; a series of analyses of these tasks, including Task Information Requirements, Cognitive/Sensory Attributes, and Performance Criteria; a User Interface Language aggregating system input and output messages in a hierarchical organization; decomposition of tasks to their constituent procedural elements; traceability between tasks and supporting TAAS functionality; and sample operational scenarios for terminal positions.

Data presented here are generated and maintained using the Computer-Human Operational Requirements Analysis System (CHORAS). CHORAS includes an automated task data base, specialized graphing capabilities, and display and hard copy output features tailored to the needs of operations concept analysis.

17. Key Words	18. Distribution of Statement
Operations Concept, Air Traffic Control, Advanced Automation System, Task Analysis, ATC Operations, Operational Scenarios, Composition Graphs, Man-Machine Interface, Terminal Advanced Automation System	

19. Security Classif. (of this report)	20. Security Classif. (of this page)	21. No. of Pages	22. Price
Unclassified	Unclassified		

Form DOT F 1700.7 Reproduction of completed page authorized

FAA AIR TRAFFIC CONTROL OPERATIONS CONCEPTS

VOLUME IV: TAAS TERMINAL CONTROLLERS

CDRL B112, VOL. IV

CONTRACT DTF-A01-85-Y-01034

6 July 1987

Change 1, 29 July 1988

DTIC COPY INSPECTED

Original Prepared By:

H. L. Ammerman
C. A. Claussen
E. E. Inman
G. W. Jones
B. E. Melville
W. K. Tobey

Accession For
NTIS GRA&I ☑
DTIC TAB ☐
Unannounced ☐
Justification
By per Form 50
Distribution/
Availability Codes
Dist | Avail and/or Special
A-1

Change 1 Prepared By:

J. R. Alexander
V. L. Alley
H. L. Ammerman
W. S. Fairhurst
C.M. Hostetler
G. W. Jones

LIST OF EFFECTIVE PAGES

This page details the current status of Volume IV by page. Original pages are designated by "O" and change pages by the sequential change (CHG) number.

Page No.	Change No.	Page No.	Change No.	Page No.	Change No.
i thru x	1	A-95 thru A-96	1	C-1 thru C-37	1
1-i thru 1-3 (new)	1	A-97 thru A-99	O	D-1 thru D-3	1
2-1 thru 2-2	1	A-100 thru A-101	1	D-4	O
A-1 thru A-2	1	A-102 thru A-106	O	D-5	1
A-3 thru A-10	O	A-107 thru A-109	1	D-6	O
A-11 thru A-12	1	A-110 thru A-113	O	D-7 thru D-23	1
A-13 thru A-20	O	A-114	1	D-24 thru D-25	O
A-21	1	A-115	O	D-26 thru D-32	1
A-22 thru A-23	O	A-116	1	D-33	O
A-24	1	A-117 thru A-118	O	D-34 thru D-37	1
A-25 thru A-26	O	A-119	1	D-38 thru D-39	O
A-27	1	A-120 thru A-121	O	D-40	1
A-28 thru A-29	O	A-122 thru A-123	1	D-41	O
A-30	1	A-124	O	D-42	1
A-31 thru A-35	O	A-125	1	E-1 thru E-89	1
A-36 thru A-38	1	A-126 thru A-131	O	E-90 thru E-144	Deleted
A-39 thru A-46	O	A-132	1	F-1 thru F-126	1
A-47	1	A-133 thru A-134	O	G-1	O
A-48 thru A-49	O	B-1	1	H-1 thru H-12	1
A-50 thru A-51	1	B-2	O		
A-52 thru A-56	O	B-3 thru B-11	1		
A-57	1	B-12	O		
A-58	O	B-13	1		
A-59 thru A-60	1	B-14	O		
A-61 thru A-68	O	B-15	1		
A-69 thru A-70	1	B-16	O		
A-71 thru A-77	O	B-17 thru B-18	1		
A-78	1	B-19	O		
A-79 thru A-85	O	B-20 thru B-21	1		
A-86	1	B-22	O		
A-87 thru A-92	O	B-23 thru B-25	1		
A-93	1	B-26 thru B-31	Deleted		
A-94	O	B-32 thru B-35	O		

Upon receipt of changes to this volume, remove superceded pages and replace with the appropriate change page. Below is a list of the formal changes detailed above and the effective date of each.

Change No.	Date
1	29 Jul 1988

FOREWORD

This document constitutes Volume III of a series of volumes which collectively define Air Traffic Control (ATC) Operations Concepts for the Federal Aviation Administration (FAA). This series was developed specifically to support the Advanced Automation System (AAS) and considers operations in today's facilities and the automated capabilities planned for the AAS in order to reach an understanding of how controller and other operational jobs will be performed as AAS evolves.

The AAS will provide enhanced capabilities to support operational ATC personnel in the en route, terminal, and tower environments; include automated capabilities to process and display surveillance data (targets, tracks, and weather), flight data, and environmental and status data, to assist the controller in maintaining a safe, orderly, and expeditious flow of traffic; provide supervisory and maintenance data and controls; and include message entry, information processing, and display outputs adaptable to the requirements and individual preferences of each controller. Ultimately, the AAS advanced automation features are expected to improve productivity by providing controllers with various strategic planning capabilities, while relieving controllers of certain routine control actions.

Evolution from the current system to the full AAS environment will progress through several major stages. This multi-volume series provides ATC personnel the Operations Concepts for selected operational positions in these different stages of AAS evolution. Volumes currently consist of the following:

- Volume I, ATC Background and Analysis Methodology - includes material common to all Operations Concept analyses in subsequent volumes, and defines analysis concepts used in those volumes.

- Volume II, ACF/ACCC Terminal & En Route Controllers - addresses the domestic en route and terminal controller in the full AAS with Automated En Route Air Traffic Control (AERA) I capabilities.

- Volume III, ISSS En Route Controllers - addresses the domestic en route controller in the Initial Sector Suite System (ISSS) environment.

- Volume IV, TAAS Terminal Controllers - addresses the terminal controller in the Terminal Advanced Automation System (TAAS) environment.

- Volume V, ATCT/TCCC Tower Controllers - addresses the tower controller in the Tower Control Computer Complex (TCCC) environment.

- Volume VI, ARTCC/Host En Route Controllers - addresses today's domestic en route controller in the Air Route Traffic Control Center (ARTCC)/Host environment.

Future volumes addressing other AAS phases and/ or operational positions will be published as required. The volumes currently identified are represented in the illustration (page vi).

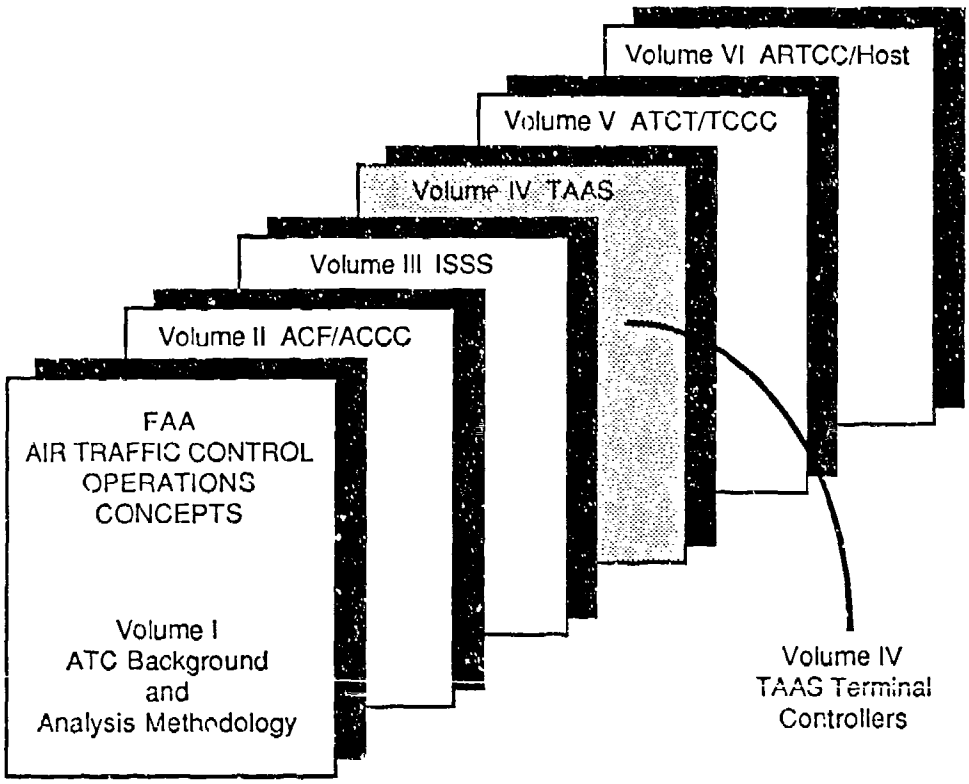

FAA Air Traffic Control Operations Concepts Volumes

Volume I provides a brief overview of the current ATC environment and planned enhancements, as well as descriptions of the analysis methodology used to produce the operations concepts of subsequent data volumes. Volume IV focuses on terminal controller operations in the Terminal Radar Approach Control (TRACON) of the Terminal Advanced Automation System (TAAS). It considers operations in today's facilities and the TAAS automated capabilities planned for AAS, in order to reach an understanding of how controller jobs will be performed within the TAAS.

Each of the other data volumes focuses on one or more operational positions in a particular type of ATC facility at a specified stage of AAS development. Each of these data volumes is an operations concept describing how controllers will perform their operational duties, given the support of the automated capabilities provided at the specified stage of AAS development.

Configuration control procedures have been developed to ensure that operational requirements data are maintained for currency, completeness, and consistency with the AAS System Level Specification (SLS). This will be accomplished via change pages whenever possible rather than republishing a new or updated volume. Substantive changes to the original volume are indicated

by a black line as shown in the margin of this paragraph. The "List of Effective Pages" (page iv) provides the current status of each page in this volume and will be updated with each subsequent change. Changes will reflect new design information and derived requirements resulting from design maturity, changes in specification requirements, and the impact of other AAS programs such as the Voice Switching and Control System (VSCS).

The value of these results rests heavily upon contributions of those active in and familiar with the present system and knowledgeable in the planned ACCC system of the future. The authors wish to express their thanks to the following members of the Sector Suite Requirements Validation Team (SSRVT) who, in addition to providing much valuable time and insight into operational matters, also provided detailed review and validation of the original contents of this volume:

NAME	FACILITY
Richard Banks	Denver TRACON
Don Dunn	Sacramento TRACON
Marty Lilly	New York TRACON
Terry Schomburg	Waterloo ATCT
Jim Sheely	Charlotte ATCT
Kathy Vargo	Flint ATCT
John Williams	Portland ATCT

Providing valued support to the continued efforts of the SSRVT are: Wilbert Larson (ATR-150), L. Lane Speck (ATR-100), and Frank Yohe (AAP-100).

TABLE OF CONTENTS

VOLUME IV

Page

List of Effective Pages iv

Foreword v

SECTION 1 INTRODUCTION

1.1 PURPOSE 1-1
1.2 ANALYSIS METHODOLOGY 1-1
1.3 APPENDICES 1-1
1.4 ASSUMPTIONS 1-2
1.5 DOCUMENT INTERFACE 1-2

SECTION 2 METHODOLOGY

2.1 GENERAL PROCESS 2-1
2.2 SPECIAL METHODOLOGICAL FEATURES 2-2

APPENDICES:

A. COMPOSITION GRAPHS A-1

B. TASK STATEMENTS AND EVENT TO SUB-ACTIVITY TRACE B-1

C. USER INTERFACE LANGUAGE C-1

D. TASK CHARACTERIZATION ANALYSES D-1

Task Information Requirements D-2
Cognitive/Sensory Attributes D-25
Performance Requirements D-33
Deleted .....

E. TASK ELEMENT STATEMENTS E-1

F. TRACEABILITY TABLES F-1

G. SITE VISIT INFORMATION G-1

H. EXPANDED OPERATIONAL SCENARIOS H-1

LIST OF FIGURES AND TABLES

FIGURES

Figure A-1 Composition Graph Symbology A-2

TABLES

Table C-1 Logical Display Contents C-3
Table C-2 Input Messages C-18

SECTION 1

INTRODUCTION

1.1 PURPOSE

This volume portrays the operational actions of terminal controllers in the TAAS environment from the controller's viewpoint. Volume IV includes an introduction (Section 1), brief supplementary information to Volume I pertaining to the analysis methodology used for TAAS terminal controllers (Section 2), and a series of appendices presenting the data developed through the present analysis.

1.2 ANALYSIS METHODOLOGY

Section 2 of this volume discusses special features of the analysis methodology that are applicable to the Operations Concept for TAAS terminal controllers. A detailed discussion of the analysis methodology is found in Volume I, Section 3.

The focus of the methodology is on the interaction between the controller and the automated system; however, controller tasks involving no interaction with the system are included where appropriate. The analysis excludes non-operational tasks such as administrative tasks and tasks related to training. Non-FAA controllers are not addressed.

Each ATC facility exhibits unique features. The amount and composition of the workload varies significantly from one facility to the next, and varies within a particular facility over time. Tasks that are performed frequently in one facility may be rare in another. Therefore, this analysis addresses a "generic" terminal facility, where the analysis is broad enough to capture all significant controller tasks performed in the Terminal Advanced Automated System. Tasks performed very infrequently by a typical controller are omitted, unless they are of overriding criticality when they occur.

Approach and Departure controllers are analyzed together, as though they were one position, because they work as a terminal unit. Similarly, the satellite controller and coordinator positions are integrated into the position for this analysis.

1.3 APPENDICES

Data developed through the present analysis are contained in the following series of appendices to this volume and parallel the methodology discussion of Volume I, Section 3:

- Appendix A: Composition Graphs
- Appendix B: Task Statementsand Event to Sub-Activity Trace
- Appendix C: User Interface Language

- Appendix D: Task Characterization Analyses
  - Task Information Requirements
  - Cognitive/Sensory Attributes
  - Performance Requirements
  - *Deleted*
- Appendix E: Task Element Statements
- Appendix F: Traceability Tables
- Appendix G: Site Visit Information
- Appendix H: Expanded Operational Scenarios

1.4 ASSUMPTIONS

The assumptions for this analysis are as described in Volume I, Section 1.5. No new assumptions are identified.

1.5 DOCUMENT INTERFACE

The Operations Concept Analysis contained in this volume was developed from the methodology defined in Volume I. Thus, Volume I is necessary for full understanding of the analysis methods used to develop the data in this volume, and the following Volume I appendices should be referred to for topical material relevant to the present analysis:

- Appendix A: Air Traffic Events
- Appendix B: Baseline Operational Scenarios
- Appendix C: Verb Glossary (Task, Element)
- Appendix D: Glossary of Terms
- Appendix F: ATC Task Element Modules
- Appendix G: References
- Appendix H: Acronyms

Reference citations in this volume are to references reported in Volume I, Appendix G. Reference numbers are given between brackets [ ].

This Page Intentionally Left Blank

SECTION 2

METHODOLOGY

2.1 GENERAL PROCESS

The analysis of the TAAS terminal position essentially followed the order in which the methodology is described in Volume I, Section 3. It is based upon and derived from the ACF/ACCC en route and terminal controller Operations Concept reported in Volume II of this series. The present analysis is to the AAS System Level Specification (Draft), Acquisition Phase [21] dated 28 August 1987.

New and revised tasks appropriate to the TAAS were identified in the System Level Specification and added to the ACF/ACCC Composition Graphs of Volume II. These are inserted in appropriate locations on the position's sub-activity Composition Graphs of Appendix A. ACCC tasks not included in TAAS and AERA 1 tasks are deleted, as are tasks or portions of tasks focusing upon purely en route control operations. All graphs were subjected to thorough review for completeness and logic, with some new tasks identified as being warranted. The resultant tasks and a trace of each sub-activity to specific ATC events are presented in Appendix B.

Controller input messages and display output messages are updated to the System Level Specification [21]. These results are incorporated in the TAAS User Interface Language (UIL) of Appendix C.

Characterizations of each TAAS task are accomplished in terms of task type, information requirements, frequency and criticality ratings, cognitive/sensory attributes, performance criteria, and interaction techniques. These are reported in the three task characterizations of Appendix D. Information requirements are updated to the current User Interface Language of Appendix C.

Each task is decomposed to its constituent procedural steps and actions. These actions, called "elements," represent the lowest level description of controller-machine interaction with respect to system-level requirements. The TAAS Task Element tables are contained in Appendix E.

Traceability is maintained between operational TAAS tasks and specific system requirements documented in the AAS System Level Specification [21]. The results of this trace, along with a report of "orphan" tasks not traced to the system requirements, is located in Appendix F.

The baseline terminal operational scenarios reported in Volume I, Appendix B, are expanded to reflect the operational tasks involved in each. Thus, they present operational solutions to the problems posed in the baseline terminal scenarios. These are recorded in Appendix H.

The TAAS sub-activity Composition Graphs, task data, characterizations, elements, and operational scenarios originally were subjected to review and validation by system users, as represented by terminal control personnel on the Sector Suite Requirements Validation Team.

2.2 SPECIAL METHODOLOGICAL FEATURES

For this generation of the Operations Concept there were no new site visits. Previous site visits and controller interviews had been accomplished in producing the original Operations Concepts for terminal and en route controllers [2, 6]. The procedural emphasis for the present volume was upon information reported in the System Level Specification [21] and reviews of task and data revisions by system users. Appendix G, therefore, reports no new site information.

All task information, characterizations, elements, and requirements traces are contained in a new automated data base for more efficient updating in the future. This data base is managed by a tool called the Computer-Human Operational Requirements Analysis System (CHORAS) [16]. This system enhances the consistency and completeness of the Operations Concept data when changes and updates are necessary.

Additionally, CHORAS permits the rapid generation of Operational Concepts for the various AAS segments as reported in Volume III (for the Initial Sector Suite System terminal controllers), Volume IV (for the Terminal Advanced Automation System En Route controllers), Volume V (for the Terminal Advanced Automation System terminal controllers), and Volume VI (for today's Air Route Traffic Control Center/Host en route controller). Volume II (for the ACF/ACCC en route and terminal controllers) serves as the baseline for the production of these other four Operations Concepts.

The scope of a task may change from one transition state to another because changes in system functionality change how the controller performs the task, or alter what data are required to perform the task. Where this occurs, separate task numbers (from those baseline task numbers reported for ACF/ACCC tasks in Volume II) are employed even though the task statement itself may remain applicable to TAAS. For TAAS these separate numbers for altered tasks, as well as for any new tasks not included in the ACF/ACCC Operations Concept of Volume II, begin with the number 75. Otherwise, the task numbers are identical to those recorded in Volume II, to provide task traceability from one transition state to another. Task changes too small to be significantly evident at the Task Element level (Appendix E) are not renumbered.

In the TAAS environment there are some non-AAS controller input and display output messages carried over from current operations. These are not listed in the User Interface Language of Appendix C. Nor are they cited as objects in the Task Element tables of Appendix E. These non-AAS objects are noted in the Element statements using initial capital letters, but are not emphasized by underlines between words.

APPENDIX A

COMPOSITION GRAPHS

This appendix contains the Composition Graphs for each of the 47 sub-activities of the TAAS terminal controllers. These are grouped by six higher-level activities for the position:

A1.1	Perform Situation Monitoring
A1.2	Resolve Aircraft Conflicts
A1.3	Manage Air Traffic Sequences
A1.4	Route or Plan Flights
A1.5	Assess Weather Impact
A1.6	Manage Sector/Position Resources

Each level of decomposition is represented graphically, starting with the top-level graph of the position, showing all six activities. Activity Composition Graphs precede the set of sub-activity graphs making up that activity. There are 369 distinct tasks incorporated within the 47 sub-activity Composition Graphs.

Sub-activities are linked (in most instances) to one or more ATC events which influence the accomplishment of the sub-activity. This linkage is identified in Appendix B.

The use of symbology in the Composition Graphs is portrayed in Figure A-1. In addition to logical flow and path conditionals, the sub-activity Composition Graphs show the coordination which forms a large part of the controller's job. For each task involving coordination and communication with others, the top row of the task statement boxes is annotated with the coordination points that may apply. These may be other positions or other agencies or facilities. The task box also depicts, at the bottom row, the media by which that coordination may be accomplished. Figure A-1 also identifies the abbreviations employed for each coordination point and for each communication medium. The use of the Voice Communications (V) medium implies any voice means, either by Voice Switching and Control System (VSCS) or use of direct person-to-person talking when the recipient is within hearing distance. Because a task may appear as part of more than one sub-activity, the coordination data encompass all cases; not all coordination points or media may apply in a particular sub-activity occurrence of a task, nor in all situations in which that sub-activity is performed on the job.

In some cases, a particular set of tasks may be relevant to many sub-activities. To simplify the graphs, these sets are designated as "macros" and a special oval symbol is defined and used to depict that entire set of tasks. This shorthand feature is used for one such macro in this analysis. This is the macro of:

A1.0.0.0, Generate Clearance Macro (comprised of selected tasks from Sub-Activity A1.4.1, Planning Clearances, and Sub-Activity A1.4.10, Issuing Clearances).

The graphing layout of this macro appears following the top-level graph of position A1 activities, and preceding the full set of activity and sub-activity Composition Graphs.

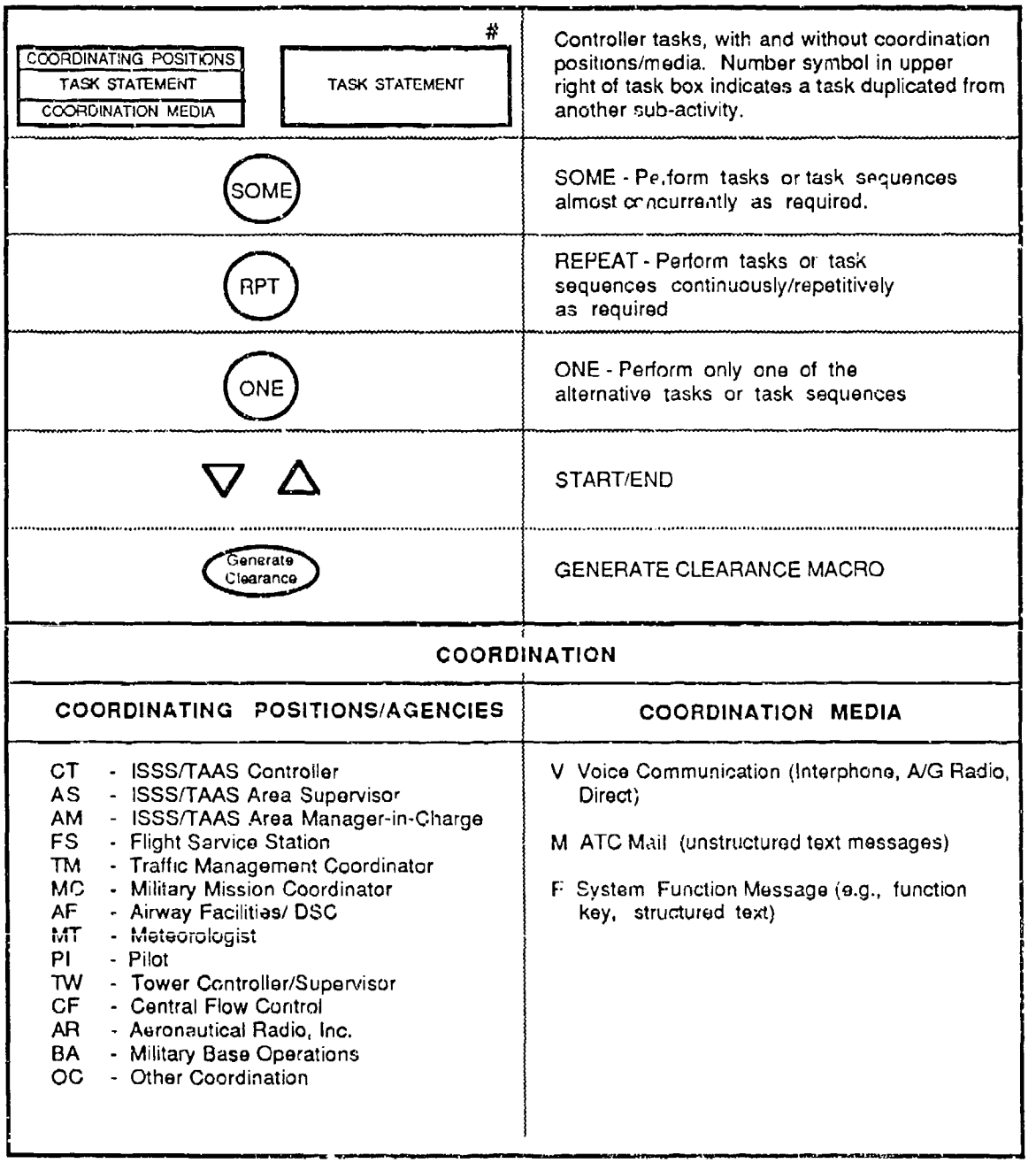

Figure A-1. Composition Graph Symbology

A1.1 PERFORM SITUATION MONITORING

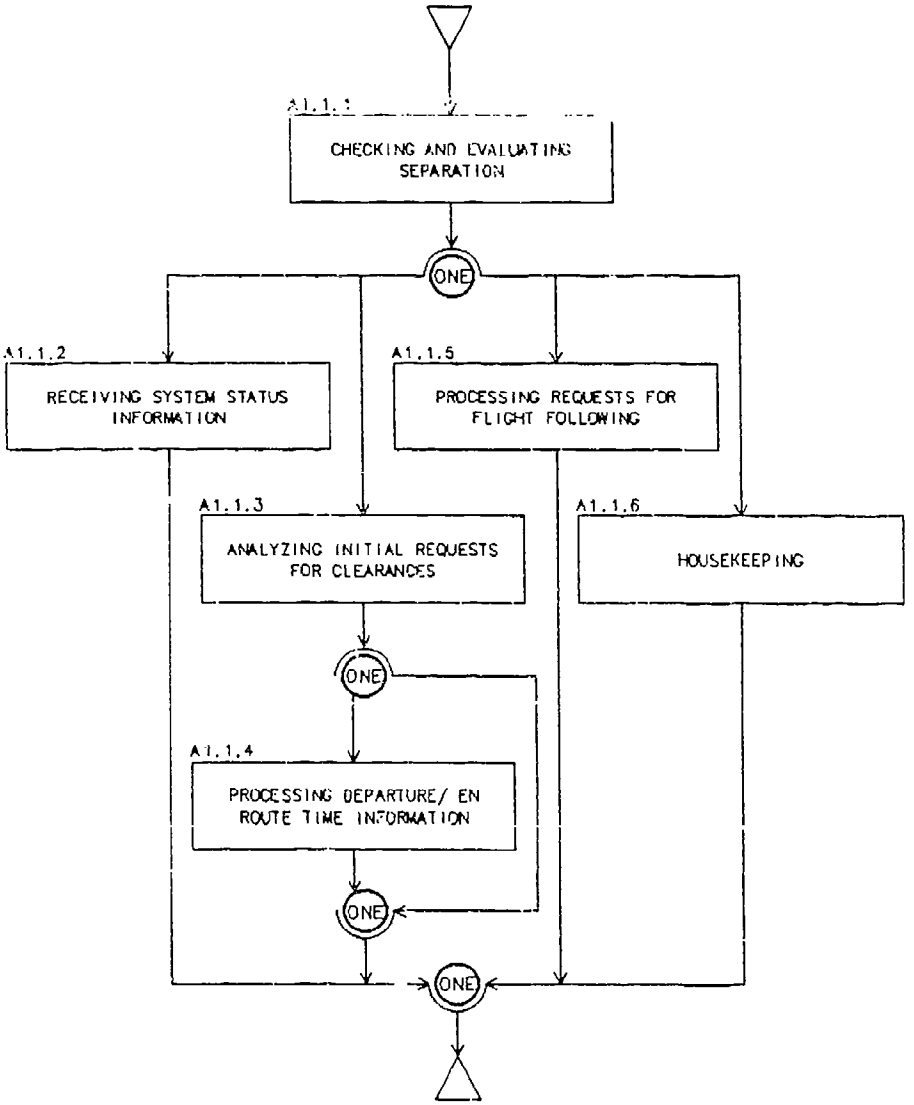

A1.0.0.0 GENERATE CLEARANCE

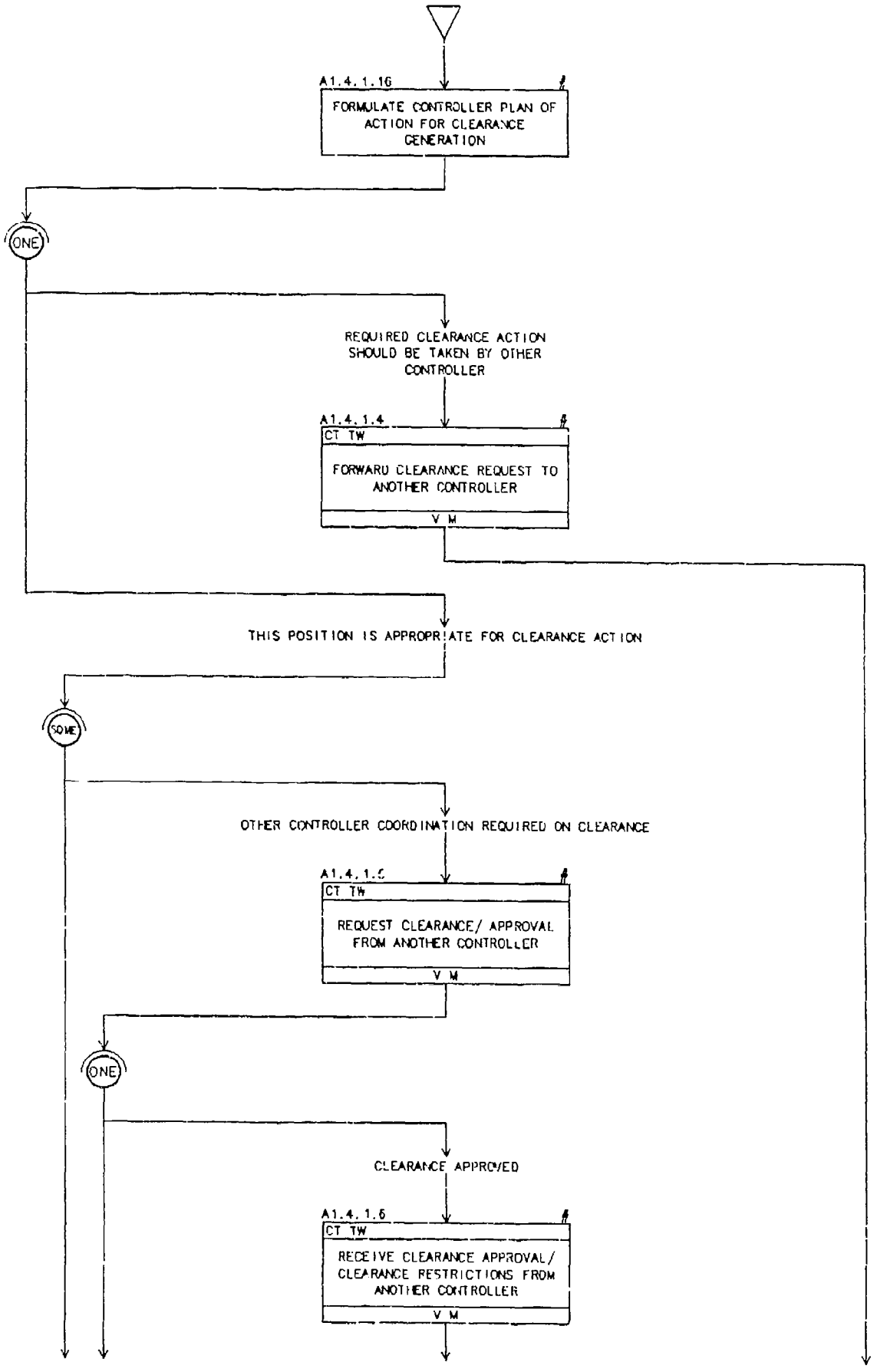

A1.0.0.0 GENERATE CLEARANCE (cont.)

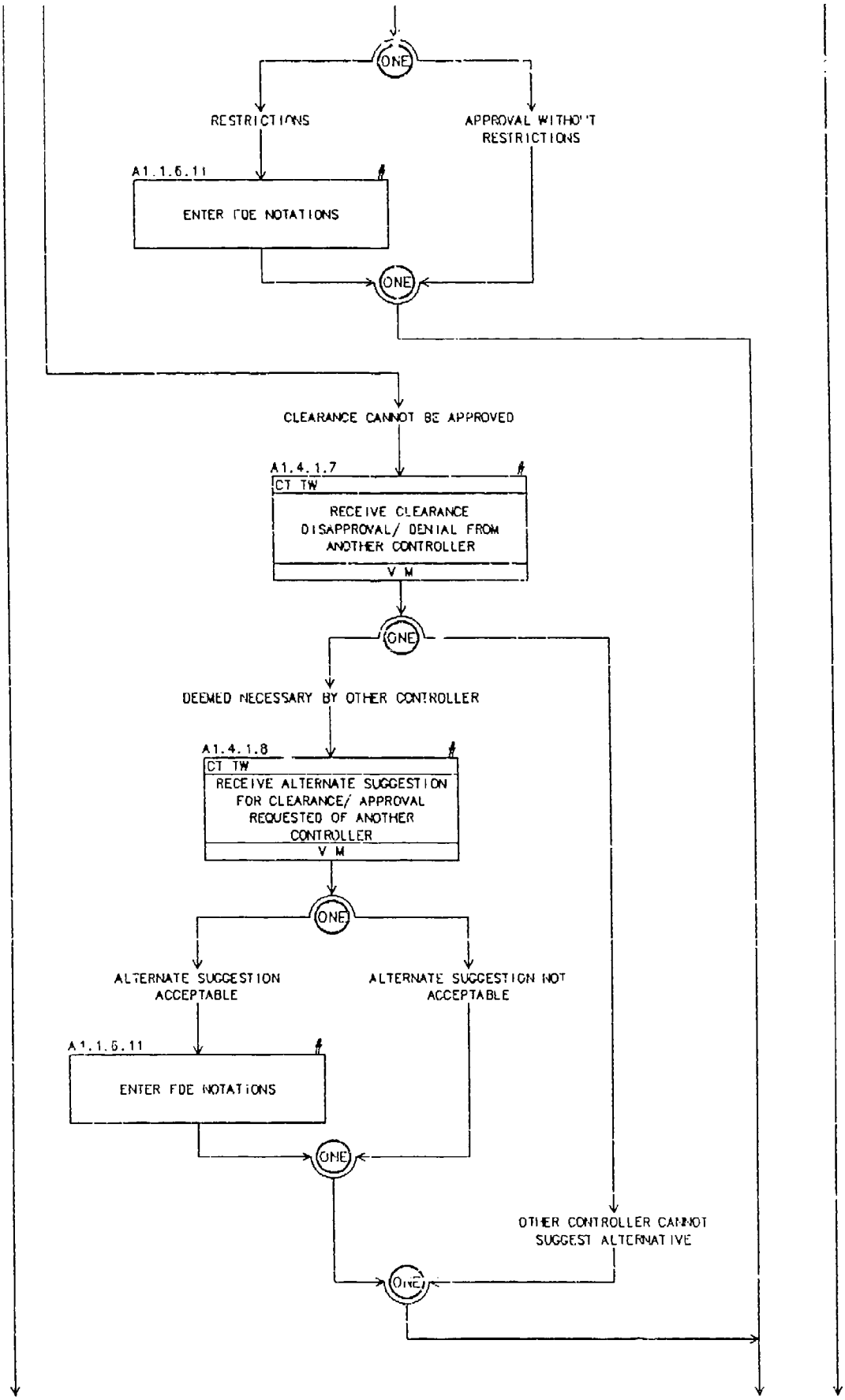

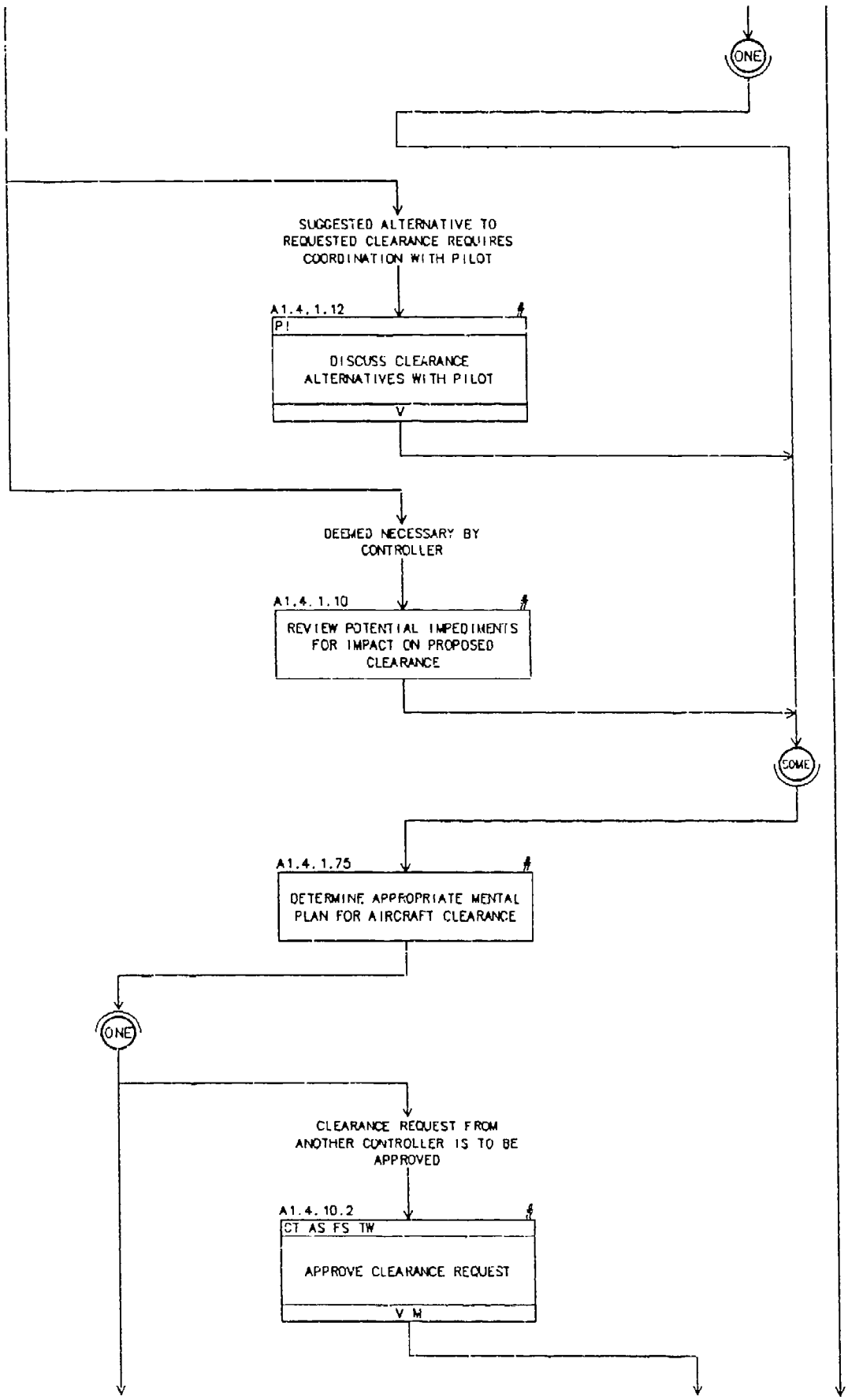
ONE
SUGGESTED ALTERNATIVE TO REQUESTED CLEARANCE REQUIRES COORDINATION WITH PILOT
A1.4.1.12
P!
DISCUSS CLEARANCE ALTERNATIVES WITH PILOT
V
DEEMED NECESSARY BY CONTROLLER
A1.4.1.10
REVIEW POTENTIAL IMPEDIMENTS FOR IMPACT ON PROPOSED CLEARANCE
SOME
A1.4.1.75
DETERMINE APPROPRIATE MENTAL PLAN FOR AIRCRAFT CLEARANCE
ONE
CLEARANCE REQUEST FROM ANOTHER CONTROLLER IS TO BE APPROVED
A1.4.10.2
CT AS FS TW
APPROVE CLEARANCE REQUEST
V M

A1.0.0.0 GENERATE CLEARANCE (cont.)

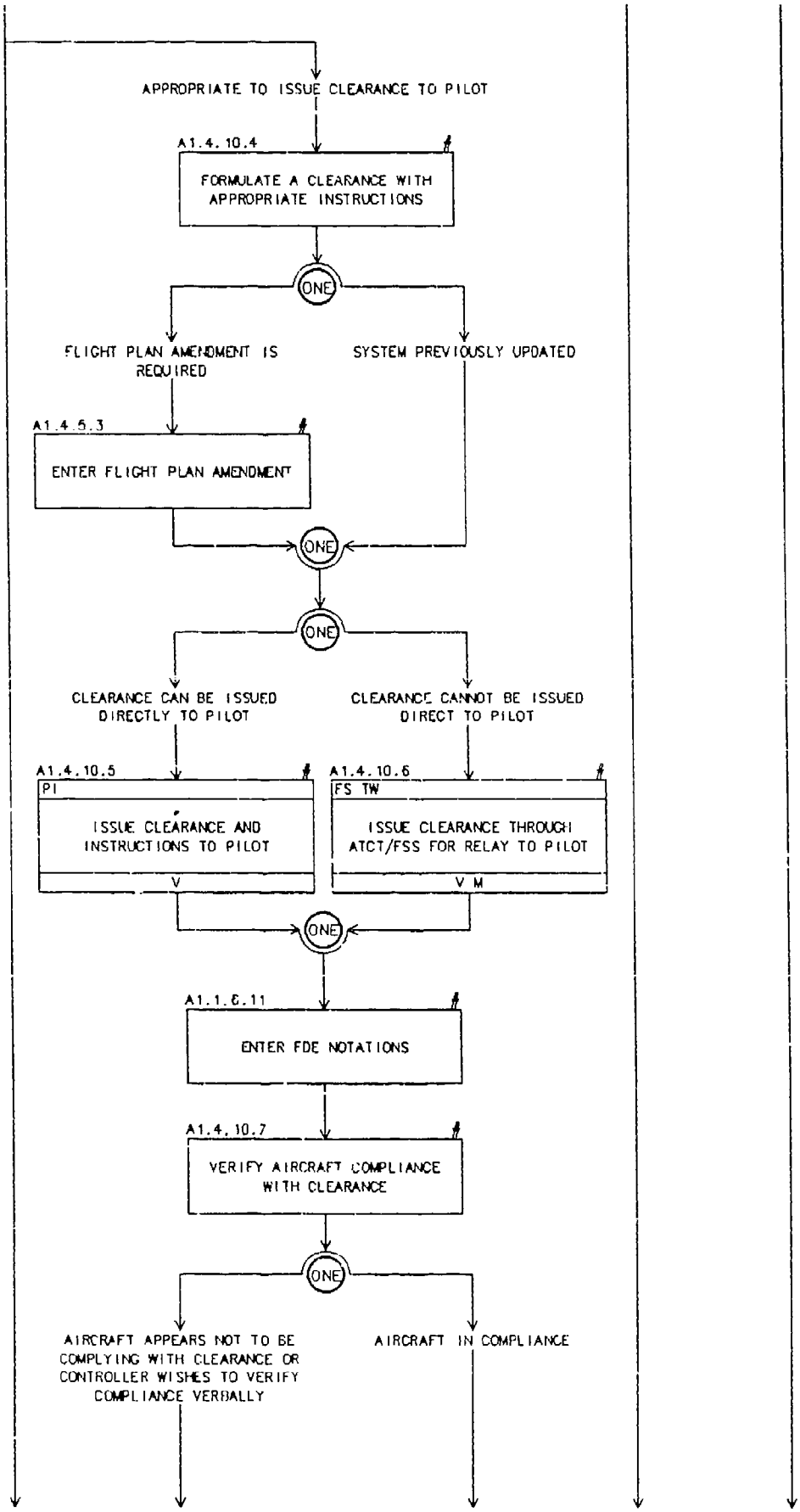

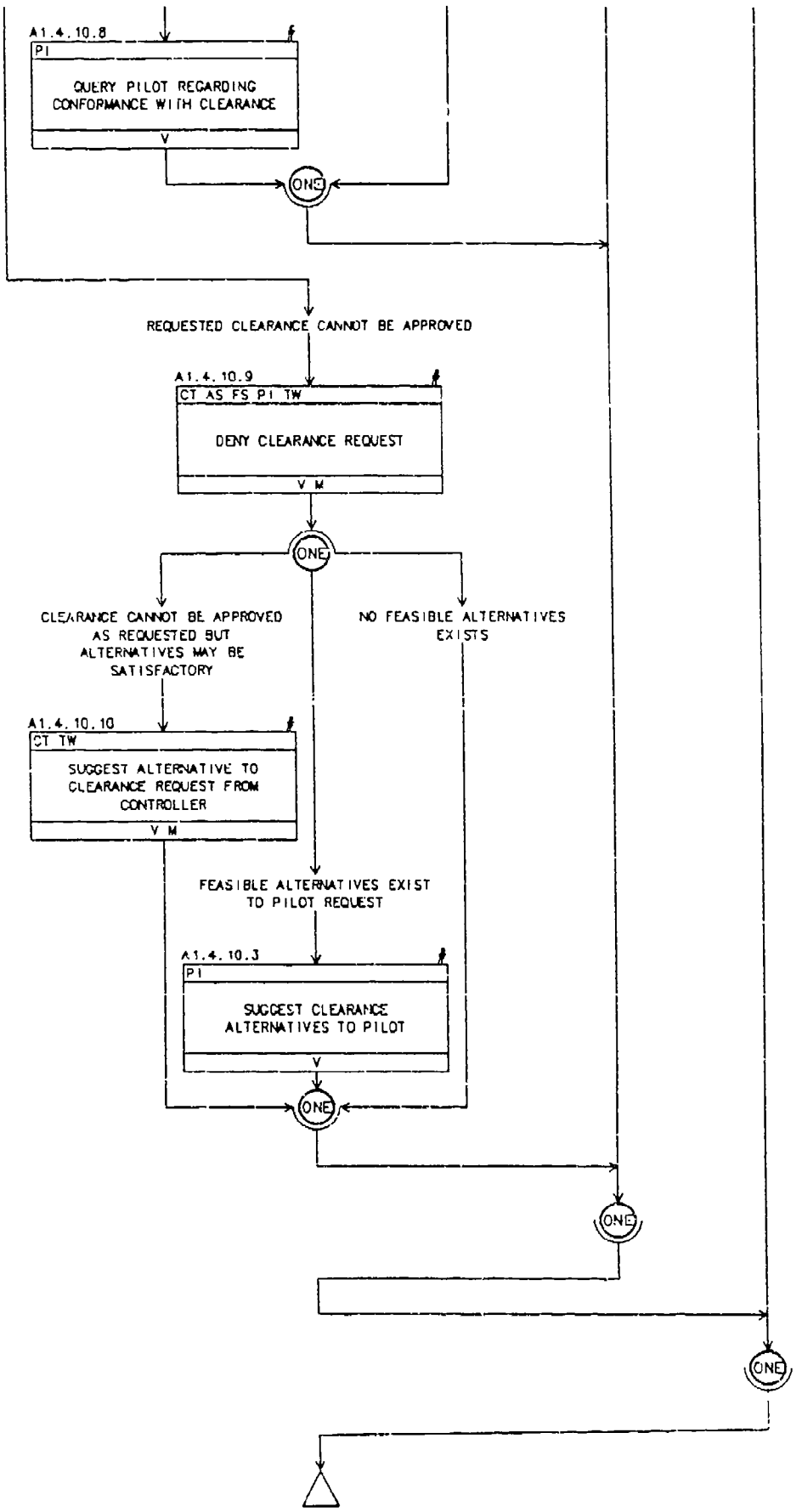
A1.4.10.8
PI
QUERY PILOT REGARDING CONFORMANCE WITH CLEARANCE
V
ONE
REQUESTED CLEARANCE CANNOT BE APPROVED
A1.4.10.9
CT AS FS PI TW
DENY CLEARANCE REQUEST
V M
ONE
CLEARANCE CANNOT BE APPROVED AS REQUESTED BUT ALTERNATIVES MAY BE SATISFACTORY
NO FEASIBLE ALTERNATIVES EXISTS
A1.4.10.10
CT TW
SUGGEST ALTERNATIVE TO CLEARANCE REQUEST FROM CONTROLLER
V M
FEASIBLE ALTERNATIVES EXIST TO PILOT REQUEST
A1.4.10.3
PI
SUGGEST CLEARANCE ALTERNATIVES TO PILOT
V
ONE
ONE
ONE

A1.1.1 CHECKING AND EVALUATING SEPARATION

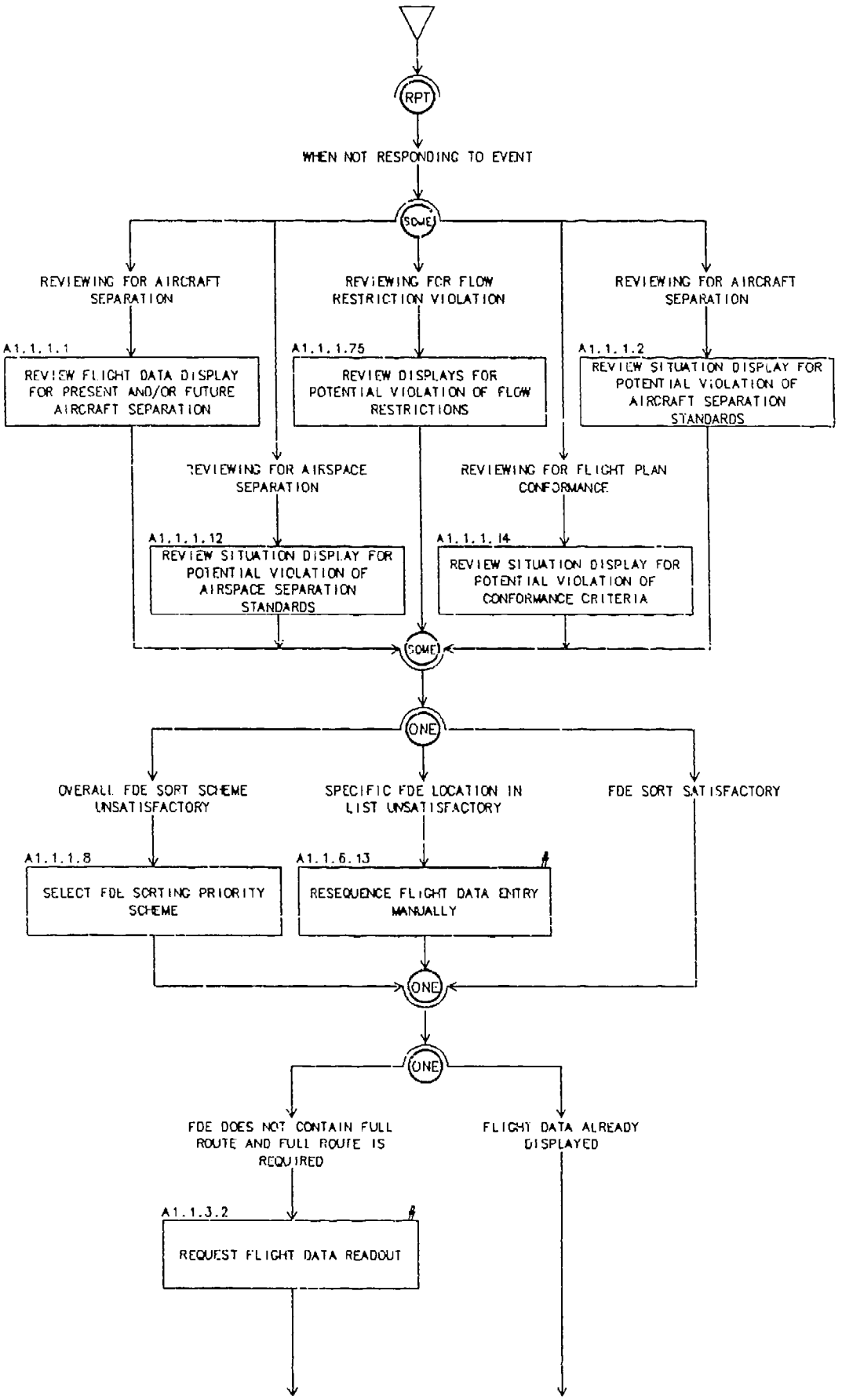

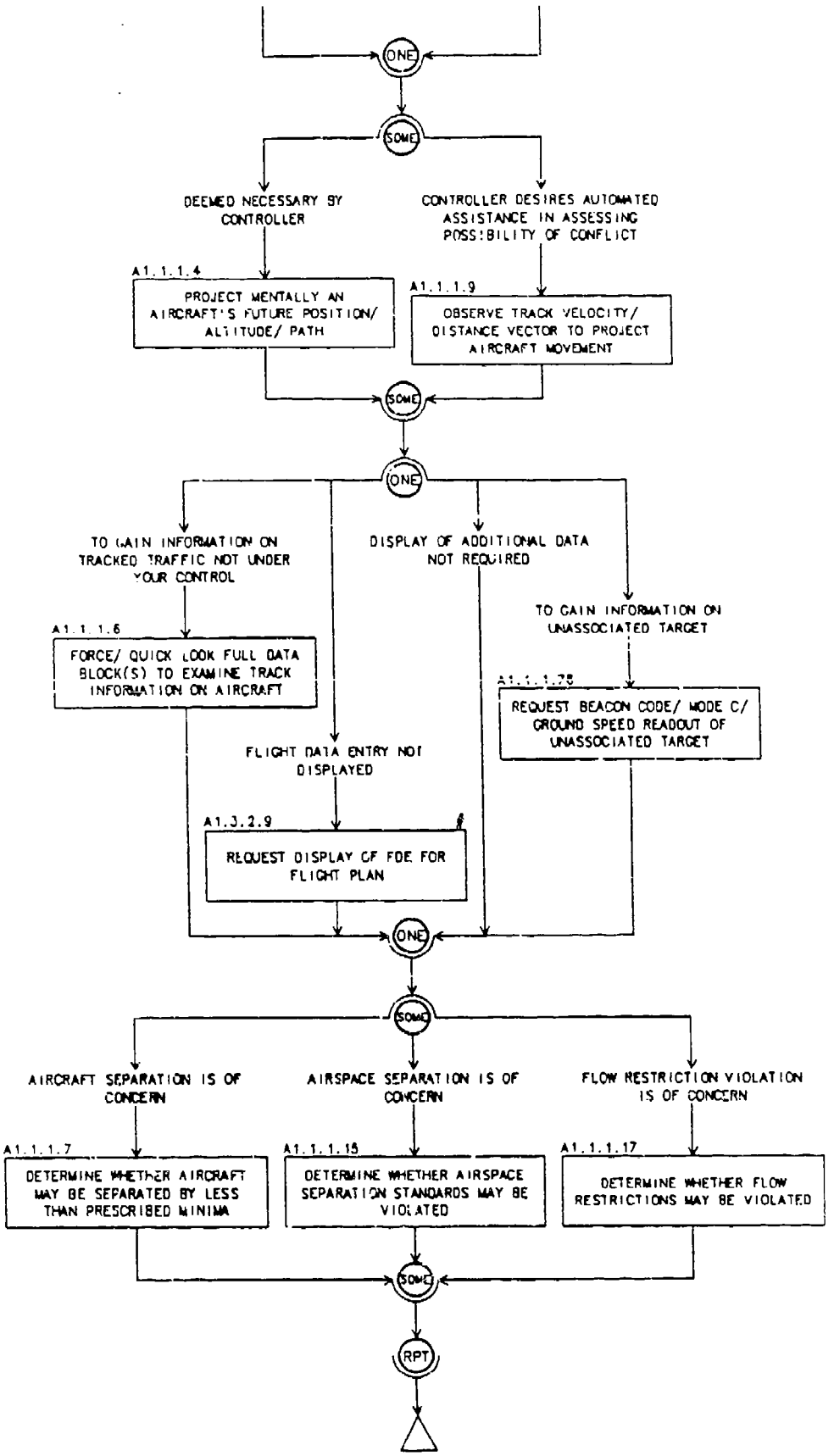
ONE
SOME
DEEMED NECESSARY BY CONTROLLER
CONTROLLER DESIRES AUTOMATED ASSISTANCE IN ASSESSING POSSIBILITY OF CONFLICT
A1.1.1.4
PROJECT MENTALLY AN AIRCRAFT'S FUTURE POSITION/ ALTITUDE/ PATH
A1.1.1.9
OBSERVE TRACK VELOCITY/ DISTANCE VECTOR TO PROJECT AIRCRAFT MOVEMENT
SOME
ONE
TO GAIN INFORMATION ON TRACKED TRAFFIC NOT UNDER YOUR CONTROL
DISPLAY OF ADDITIONAL DATA NOT REQUIRED
TO GAIN INFORMATION ON UNASSOCIATED TARGET
A1.1.1.6
FORCE/ QUICK LOOK FULL DATA BLOCK(S) TO EXAMINE TRACK INFORMATION ON AIRCRAFT
A1.1.1.7B
REQUEST BEACON CODE/ MODE C/ GROUND SPEED READOUT OF UNASSOCIATED TARGET
FLIGHT DATA ENTRY NOT DISPLAYED
A1.3.2.9
REQUEST DISPLAY OF FDE FOR FLIGHT PLAN
ONE
SOME
AIRCRAFT SEPARATION IS OF CONCERN
AIRSPACE SEPARATION IS OF CONCERN
FLOW RESTRICTION VIOLATION IS OF CONCERN
A1.1.1.7
DETERMINE WHETHER AIRCRAFT MAY BE SEPARATED BY LESS THAN PRESCRIBED MINIMA
A1.1.1.15
DETERMINE WHETHER AIRSPACE SEPARATION STANDARDS MAY BE VIOLATED
A1.1.1.17
DETERMINE WHETHER FLOW RESTRICTIONS MAY BE VIOLATED
SOME
RPT

A1.1.2 RECEIVING SYSTEM STATUS INFORMATION

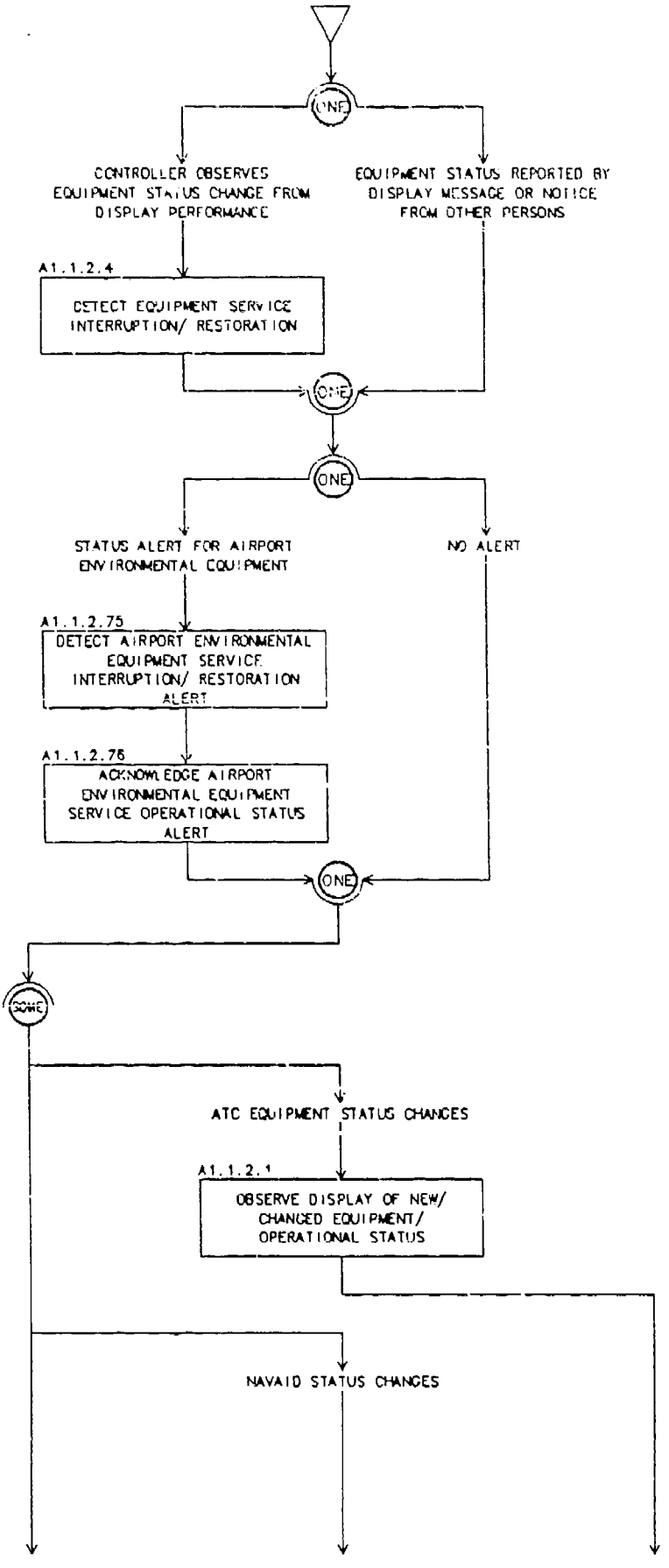

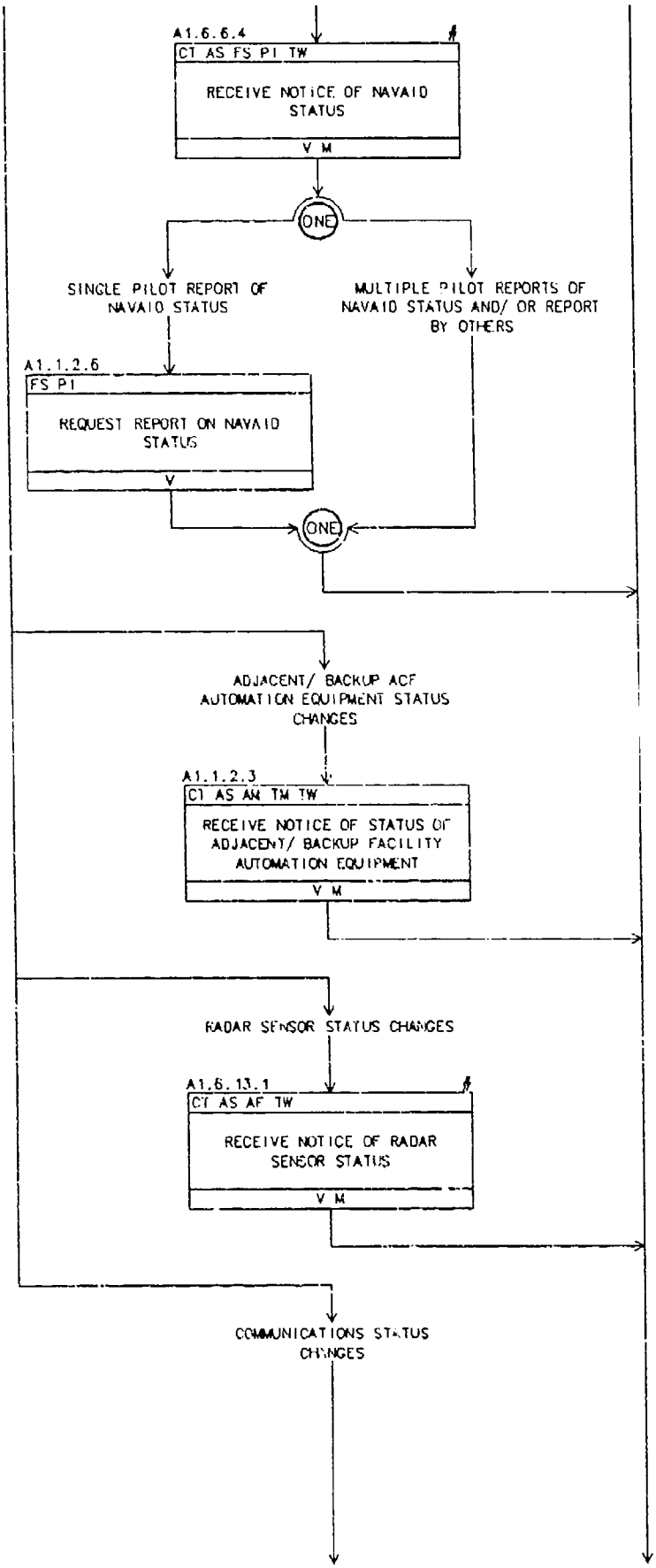
A1.6.6.4
CT AS FS P1 TW
RECEIVE NOTICE OF NAVAID STATUS
V M
ONE
SINGLE PILOT REPORT OF NAVAID STATUS
MULTIPLE PILOT REPORTS OF NAVAID STATUS AND/ OR REPORT BY OTHERS
A1.1.2.6
FS P1
REQUEST REPORT ON NAVAID STATUS
V
ONE
ADJACENT/ BACKUP ACF AUTOMATION EQUIPMENT STATUS CHANGES
A1.1.2.3
CT AS AM TM TW
RECEIVE NOTICE OF STATUS OF ADJACENT/ BACKUP FACILITY AUTOMATION EQUIPMENT
V M
RADAR SENSOR STATUS CHANGES
A1.6.13.1
CT AS AF TW
RECEIVE NOTICE OF RADAR SENSOR STATUS
V M
COMMUNICATIONS STATUS CHANGES

A1.1.2 RECEIVING SYSTEM STATUS INFORMATION (cont.)

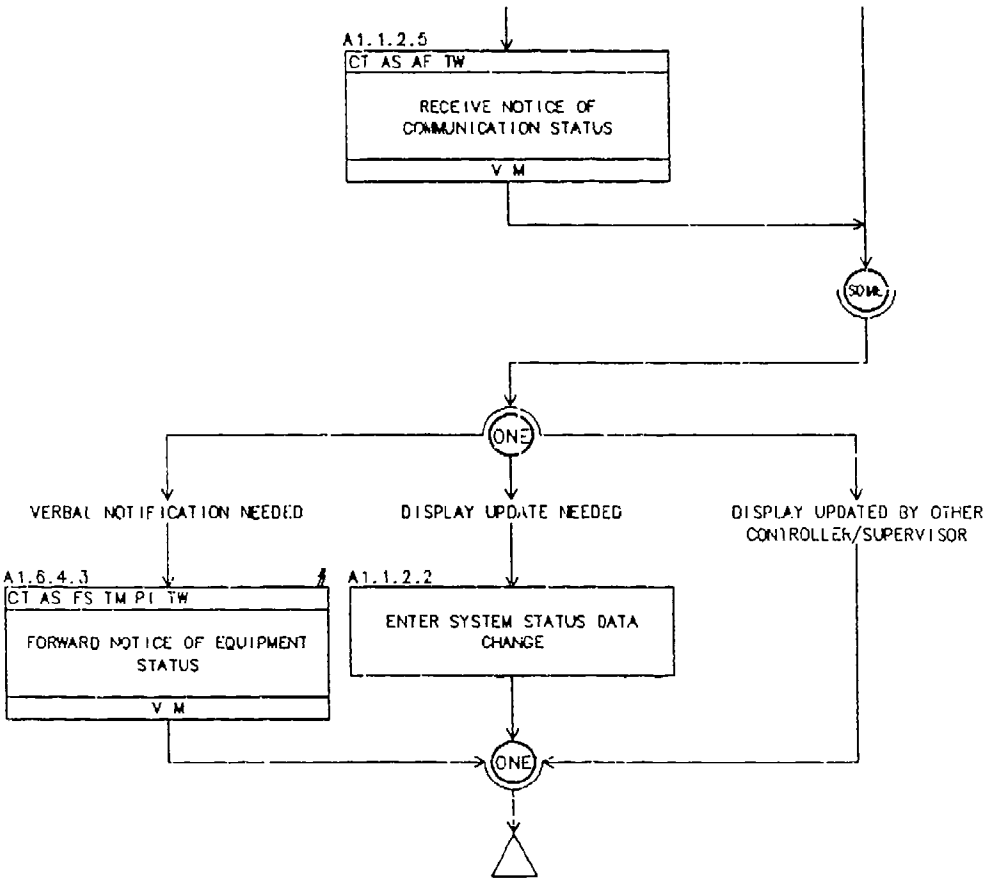

A1.1.3 ANALYZING INITIAL REQUESTS FOR CLEARANCES

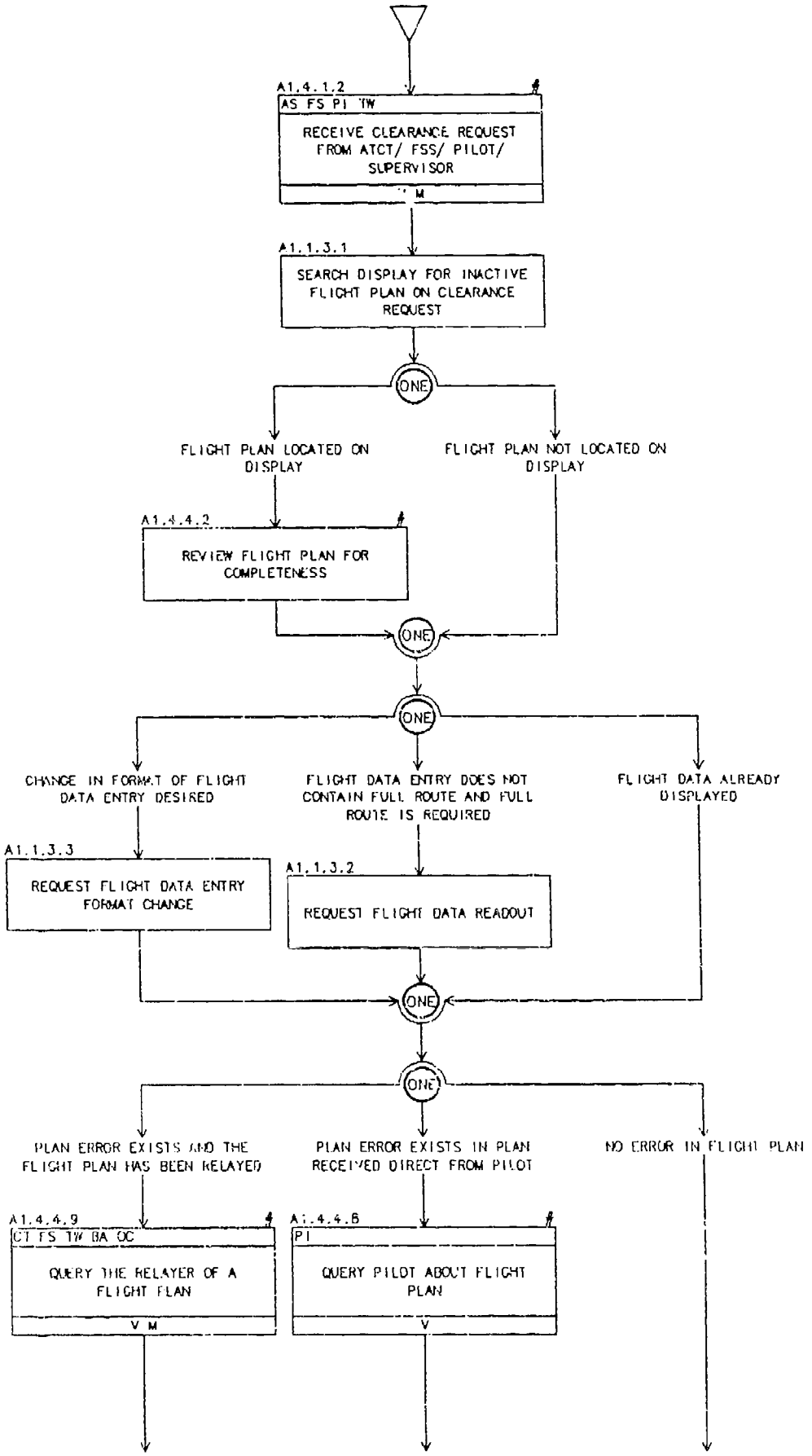

A1.1.3 ANALYZING INITIAL REQUESTS FOR CLEARANCES (cont.)

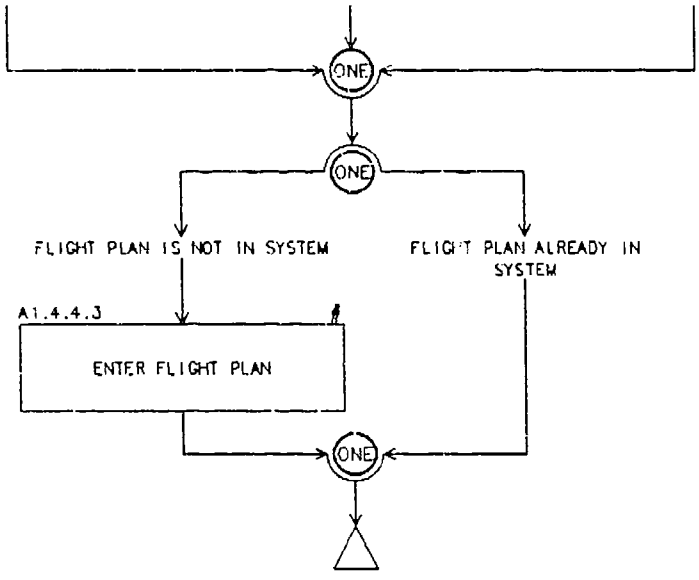

A1.1.4 PROCESSING DEPARTURE/ EN ROUTE TIME INFORMATION

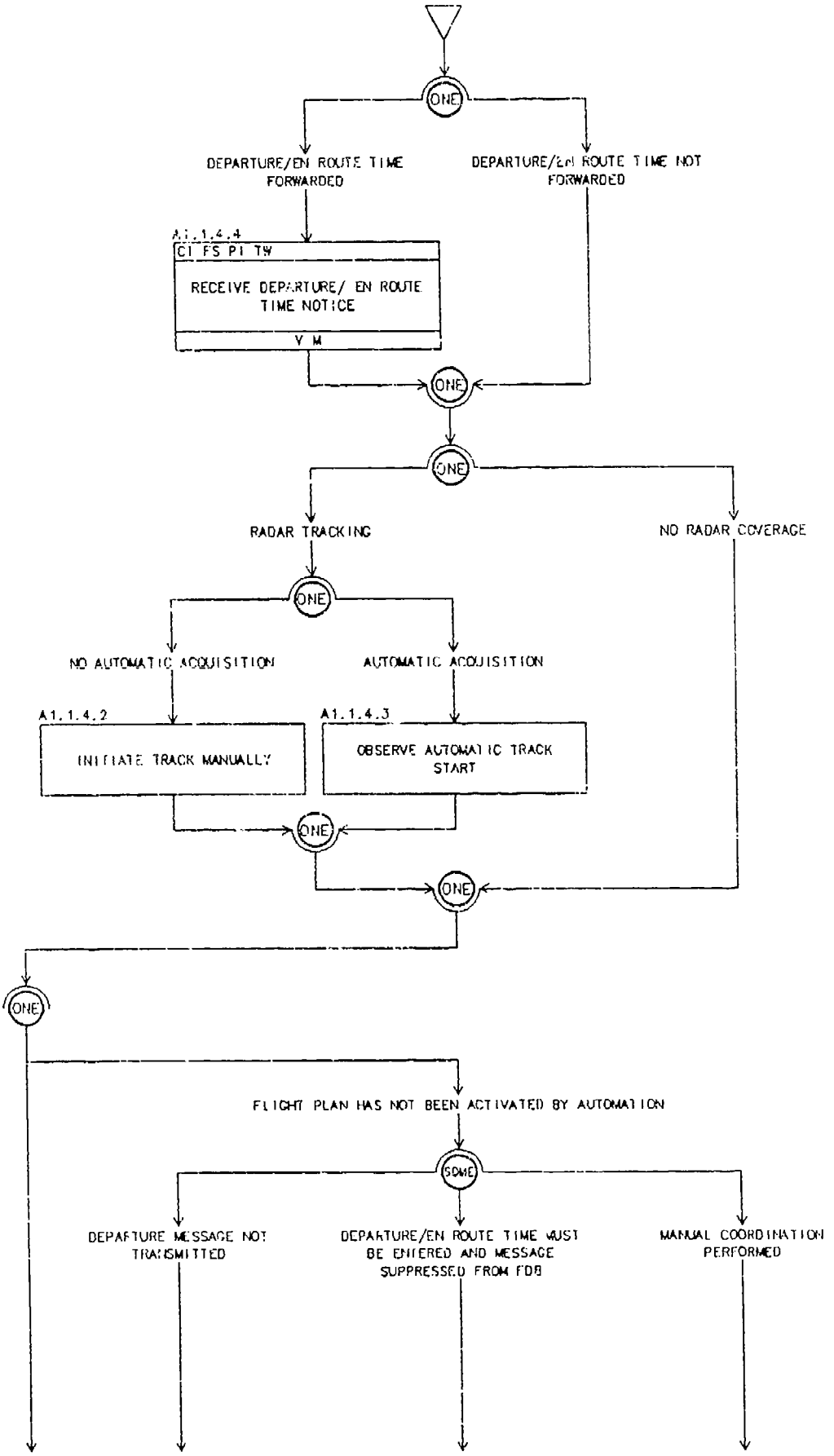

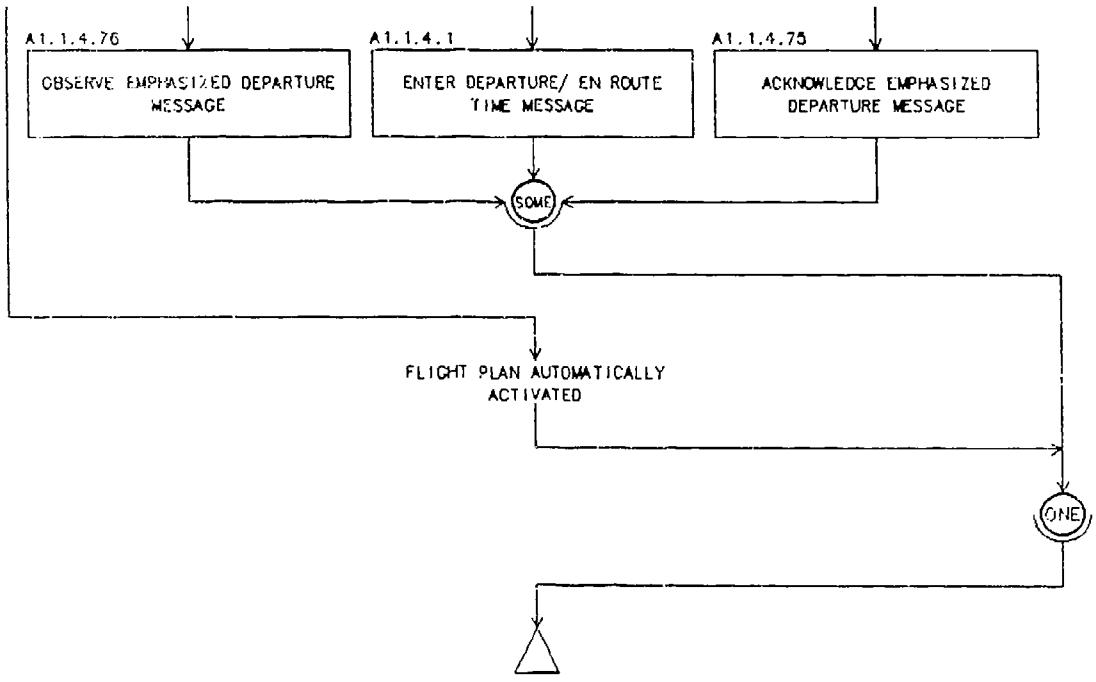
A1.1.4.76
OBSERVE EMPHASIZED DEPARTURE MESSAGE
A1.1.4.1
ENTER DEPARTURE/ EN ROUTE TIME MESSAGE
A1.1.4.75
ACKNOWLEDGE EMPHASIZED DEPARTURE MESSAGE
SOME
FLIGHT PLAN AUTOMATICALLY ACTIVATED
ONE

A1.1.5 PROCESSING REQUESTS FOR FLIGHT FOLLOWING

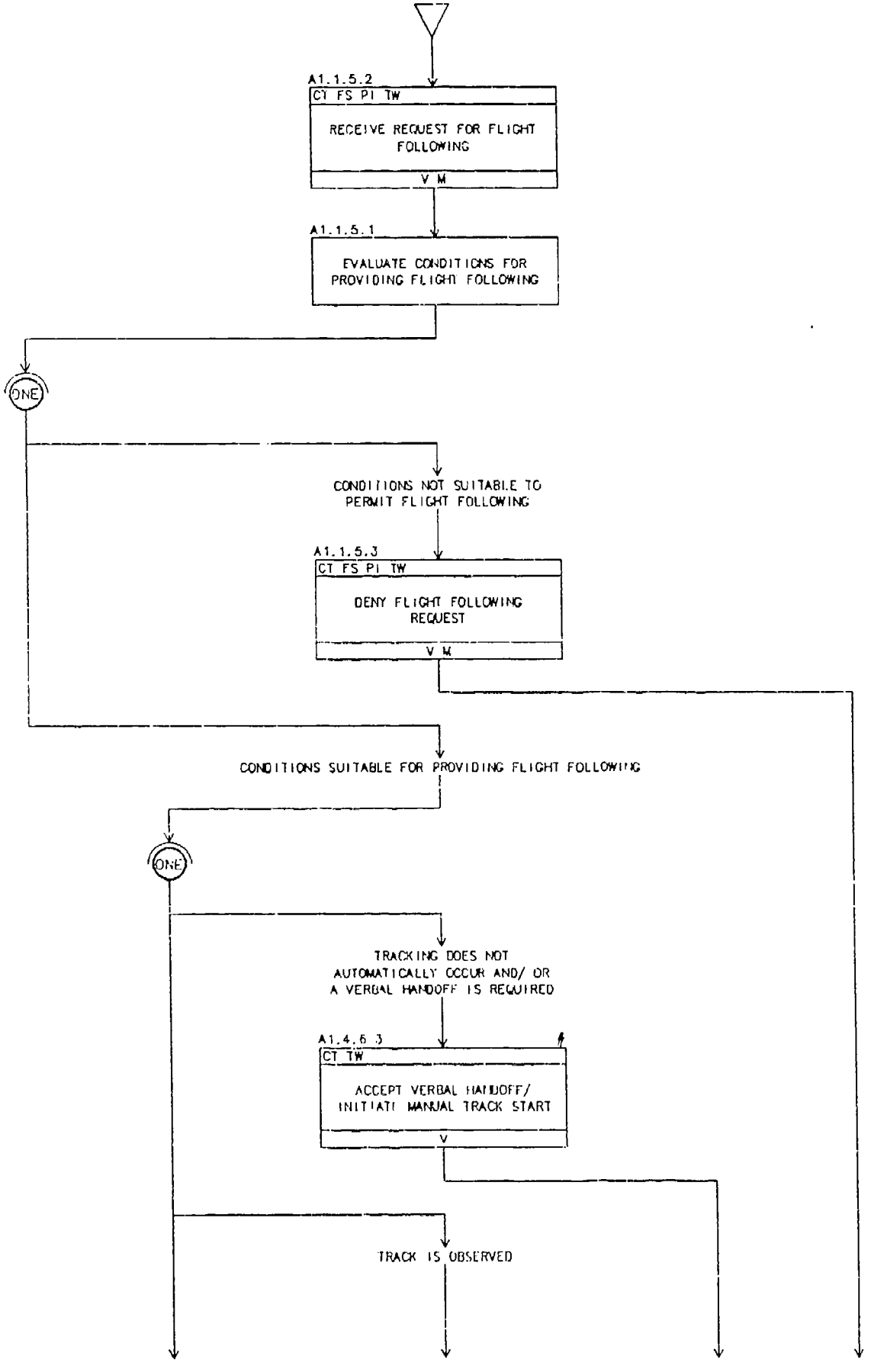

A1.1.5 PROCESSING REQUESTS FOR FLIGHT FOLLOWING (cont.)

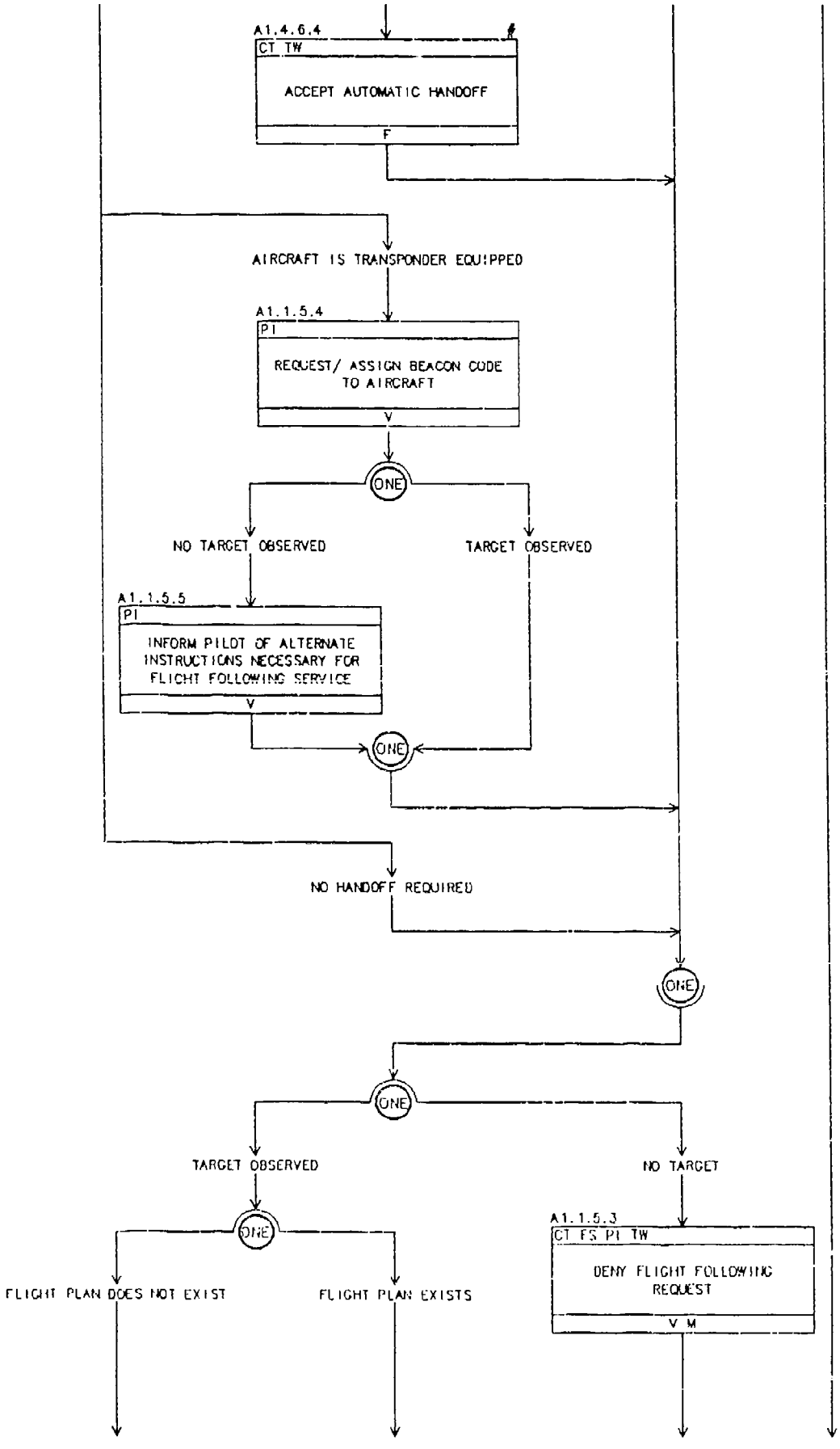

A1.1.5 PROCESSING REQUESTS FOR FLIGHT FOLLOWING (cont.)

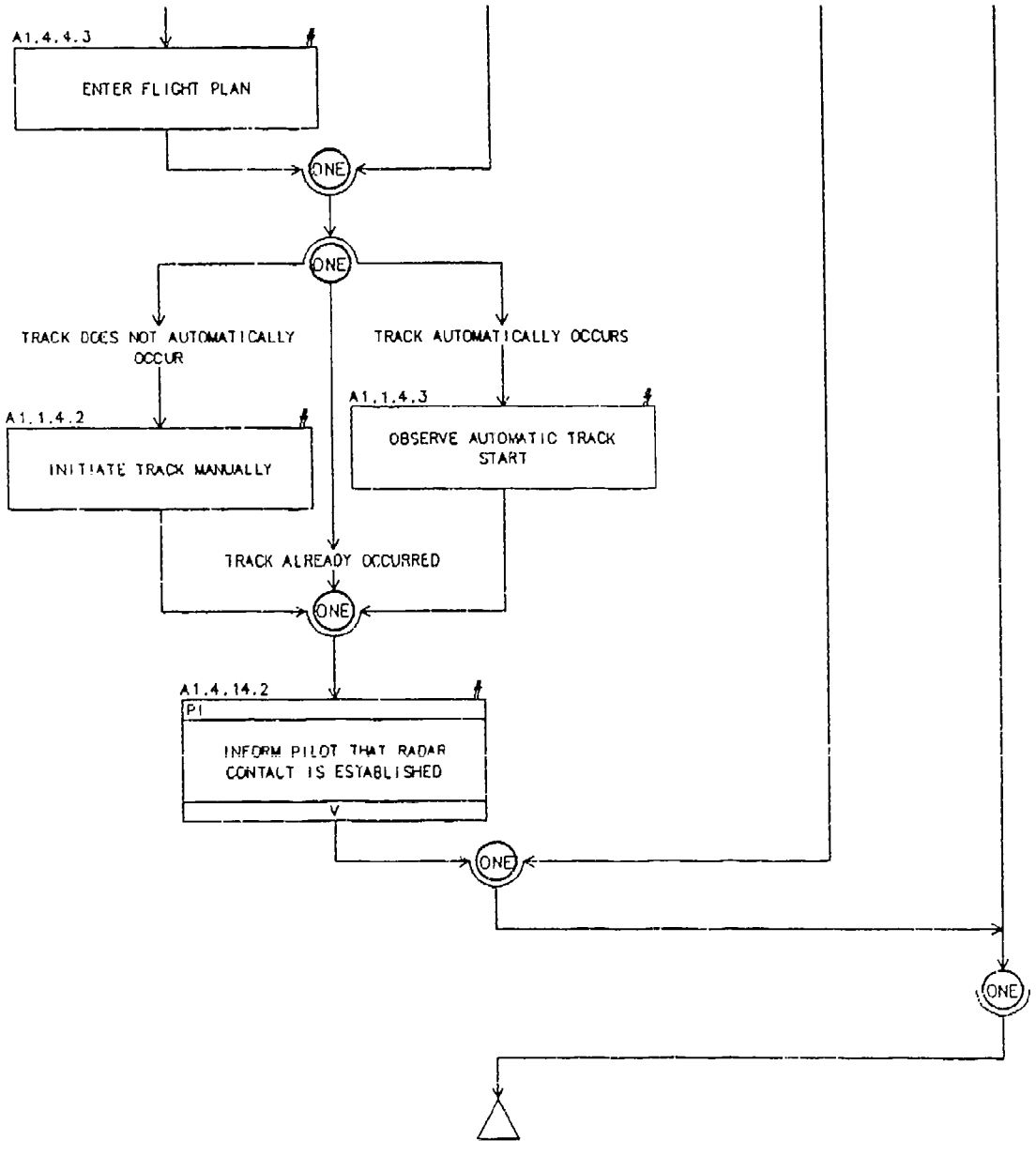

A1.1.6 HOUSEKEEPING

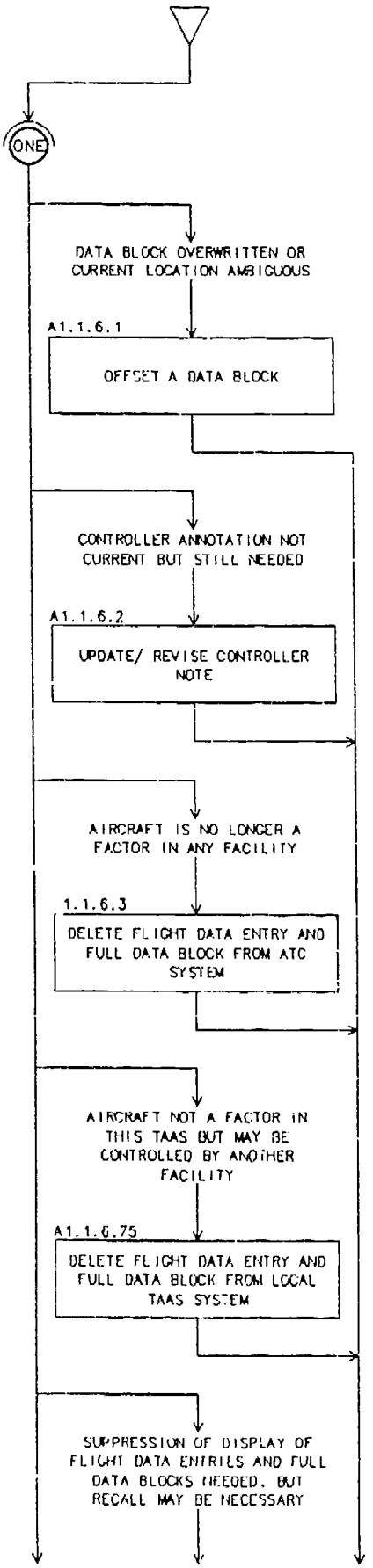

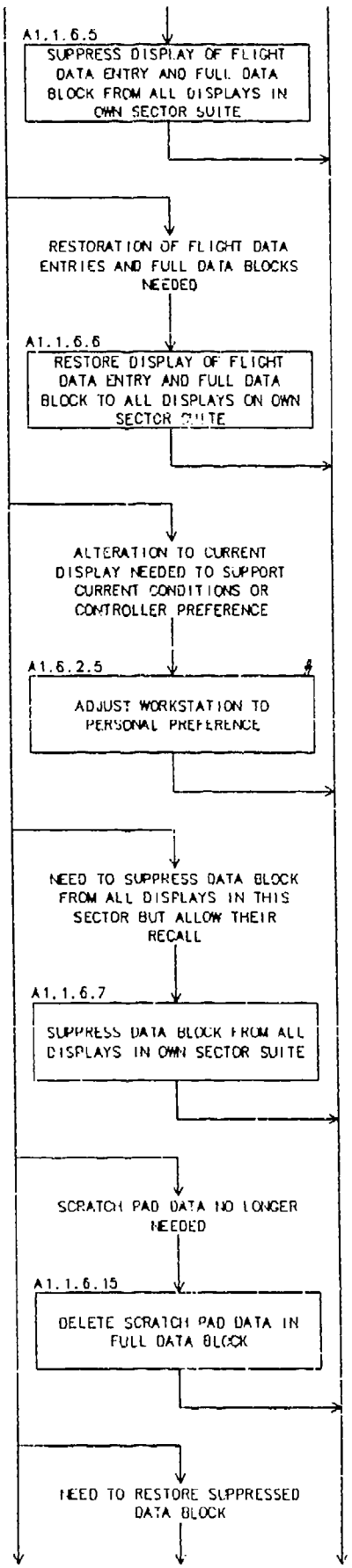
A1.1.6.5
SUPPRESS DISPLAY OF FLIGHT DATA ENTRY AND FULL DATA BLOCK FROM ALL DISPLAYS IN OWN SECTOR SUITE
RESTORATION OF FLIGHT DATA ENTRIES AND FULL DATA BLOCKS NEEDED
A1.1.6.6
RESTORE DISPLAY OF FLIGHT DATA ENTRY AND FULL DATA BLOCK TO ALL DISPLAYS ON OWN SECTOR SUITE
ALTERATION TO CURRENT DISPLAY NEEDED TO SUPPORT CURRENT CONDITIONS OR CONTROLLER PREFERENCE
A1.6.2.5
ADJUST WORKSTATION TO PERSONAL PREFERENCE
NEED TO SUPPRESS DATA BLOCK FROM ALL DISPLAYS IN THIS SECTOR BUT ALLOW THEIR RECALL
A1.1.6.7
SUPPRESS DATA BLOCK FROM ALL DISPLAYS IN OWN SECTOR SUITE
SCRATCH PAD DATA NO LONGER NEEDED
A1.1.6.15
DELETE SCRATCH PAD DATA IN FULL DATA BLOCK
NEED TO RESTORE SUPPRESSED DATA BLOCK

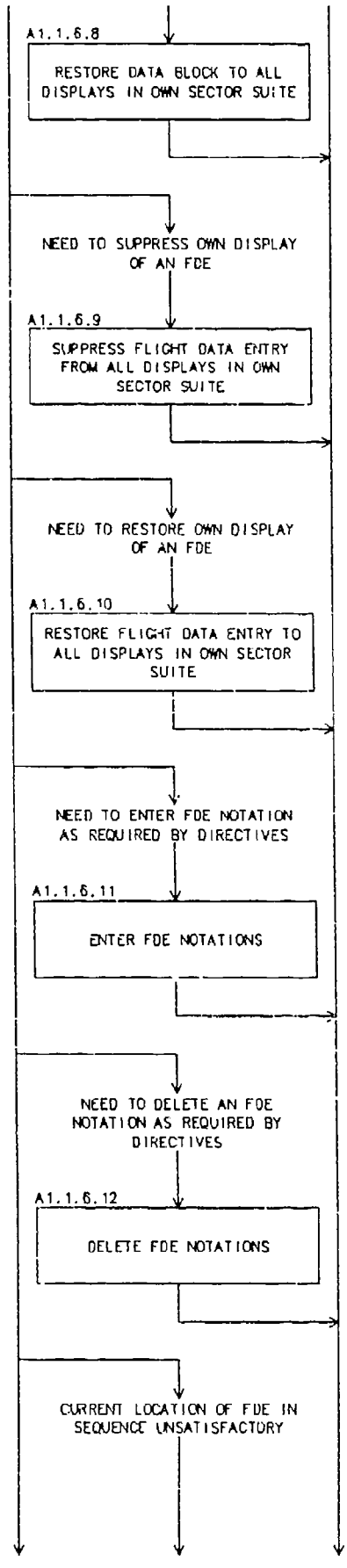
A1.1.6.8
RESTORE DATA BLOCK TO ALL DISPLAYS IN OWN SECTOR SUITE
NEED TO SUPPRESS OWN DISPLAY OF AN FDE
A1.1.6.9
SUPPRESS FLIGHT DATA ENTRY FROM ALL DISPLAYS IN OWN SECTOR SUITE
NEED TO RESTORE OWN DISPLAY OF AN FDE
A1.1.6.10
RESTORE FLIGHT DATA ENTRY TO ALL DISPLAYS IN OWN SECTOR SUITE
NEED TO ENTER FDE NOTATION AS REQUIRED BY DIRECTIVES
A1.1.6.11
ENTER FDE NOTATIONS
NEED TO DELETE AN FDE NOTATION AS REQUIRED BY DIRECTIVES
A1.1.6.12
DELETE FDE NOTATIONS
CURRENT LOCATION OF FDE IN SEQUENCE UNSATISFACTORY

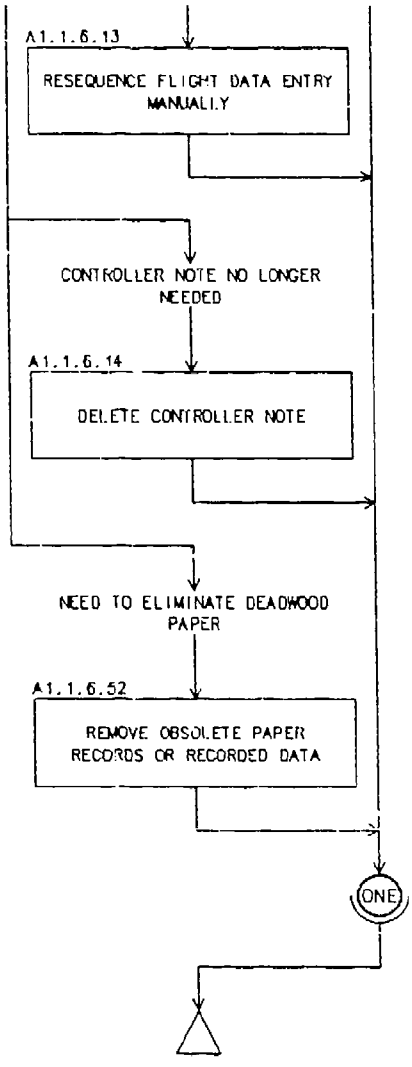
A1.1.6.13
RESEQUENCE FLIGHT DATA ENTRY MANUALLY
CONTROLLER NOTE NO LONGER NEEDED
A1.1.6.14
DELETE CONTROLLER NOTE
NEED TO ELIMINATE DEADWOOD PAPER
A1.1.6.52
REMOVE OBSOLETE PAPER RECORDS OR RECORDED DATA
ONE

A1.2 RESOLVE AIRCRAFT CONFLICTS

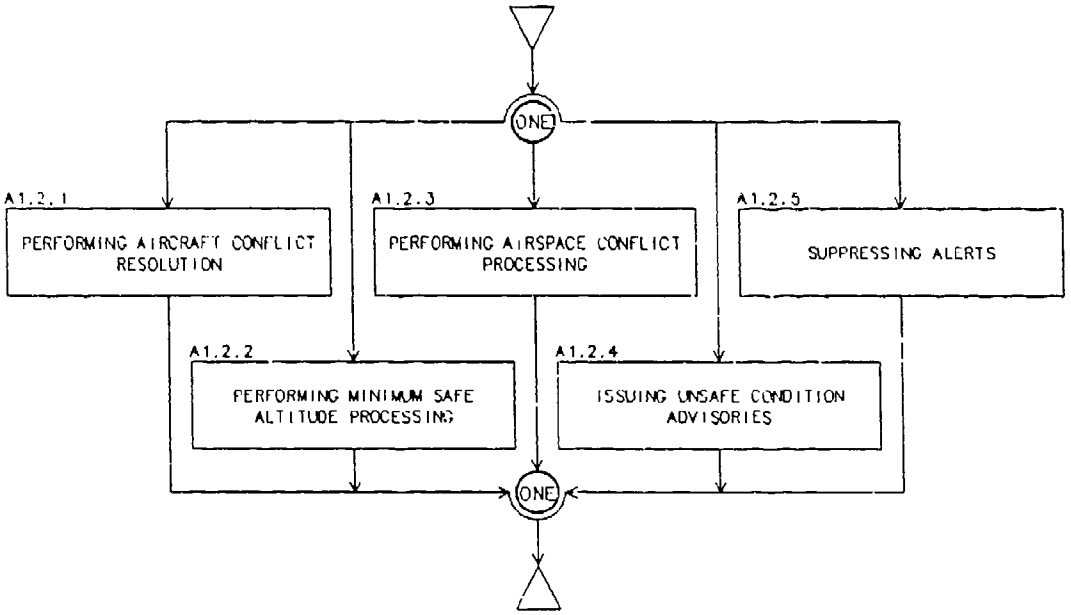

A1.2.1 PERFORMING AIRCRAFT CONFLICT RESOLUTION

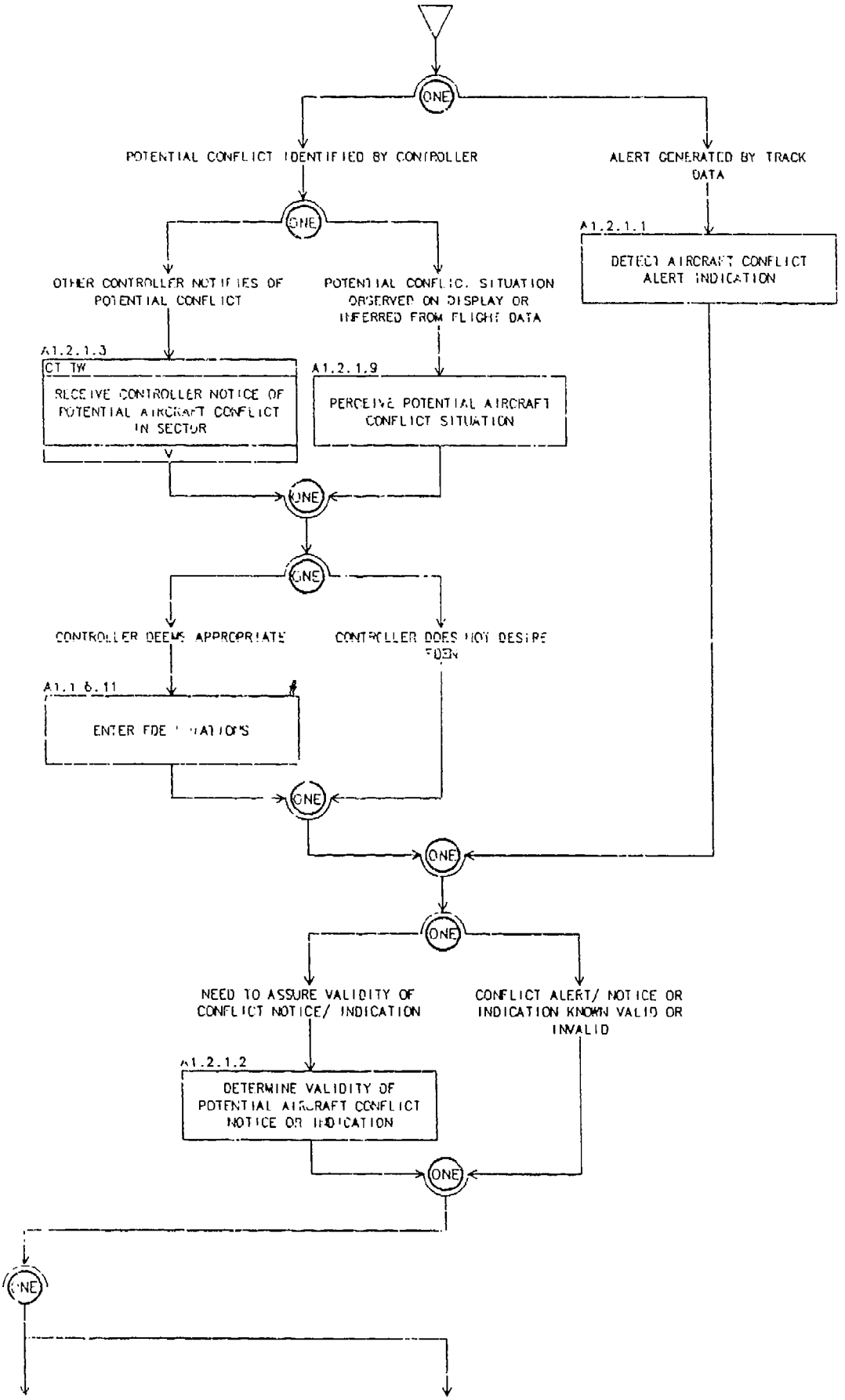

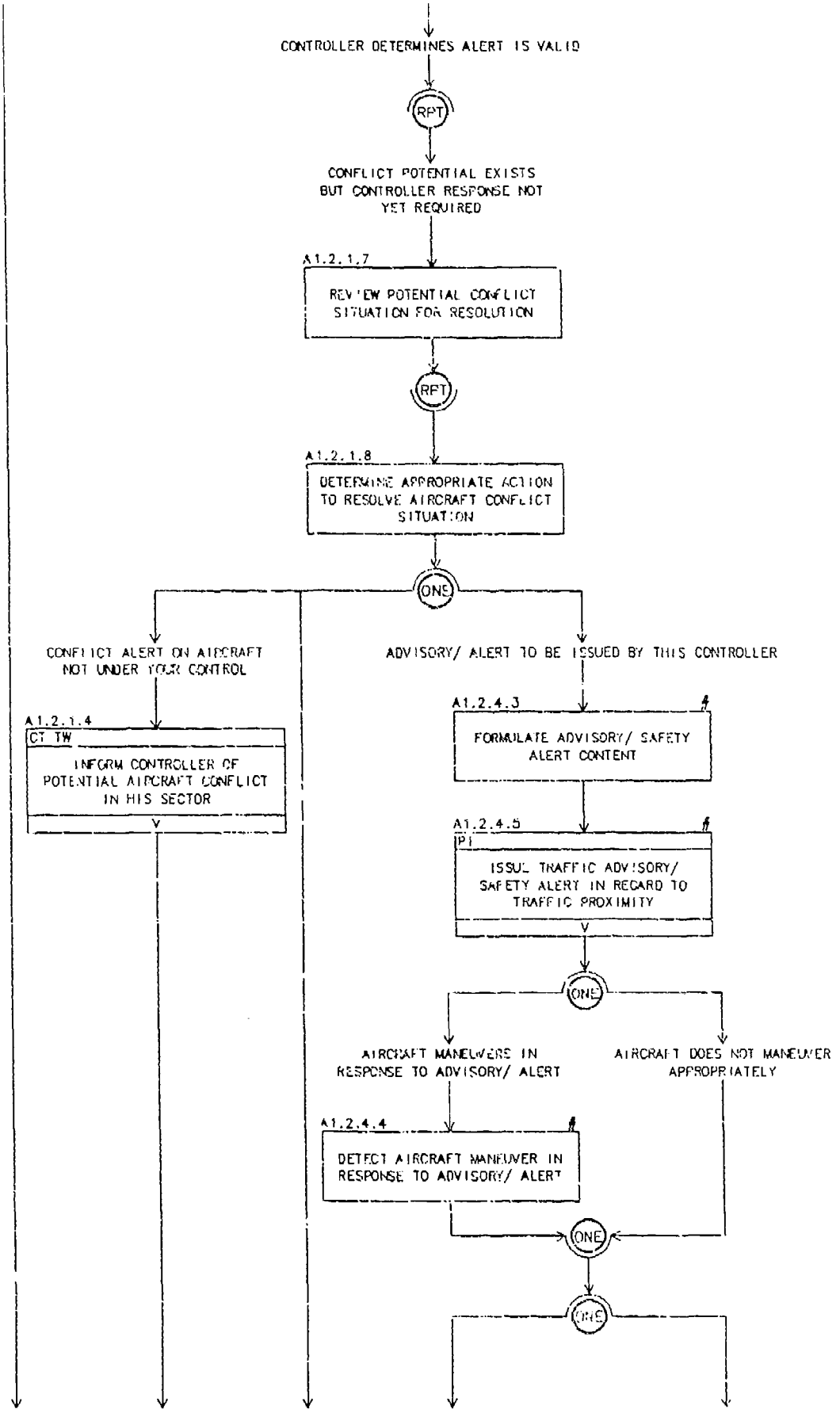
CONTROLLER DETERMINES ALERT IS VALID
RPT
CONFLICT POTENTIAL EXISTS BUT CONTROLLER RESPONSE NOT YET REQUIRED
A1.2.1.7
REVIEW POTENTIAL CONFLICT SITUATION FOR RESOLUTION
RPT
A1.2.1.8
DETERMINE APPROPRIATE ACTION TO RESOLVE AIRCRAFT CONFLICT SITUATION
ONE
CONFLICT ALERT ON AIRCRAFT NOT UNDER YOUR CONTROL
ADVISORY/ ALERT TO BE ISSUED BY THIS CONTROLLER
A1.2.1.4
CT TW
INFORM CONTROLLER OF POTENTIAL AIRCRAFT CONFLICT IN HIS SECTOR
A1.2.4.3
FORMULATE ADVISORY/ SAFETY ALERT CONTENT
A1.2.4.5
PT
ISSUE TRAFFIC ADVISORY/ SAFETY ALERT IN REGARD TO TRAFFIC PROXIMITY
ONE
AIRCRAFT MANEUVERS IN RESPONSE TO ADVISORY/ ALERT
AIRCRAFT DOES NOT MANEUVER APPROPRIATELY
A1.2.4.4
DETECT AIRCRAFT MANEUVER IN RESPONSE TO ADVISORY/ ALERT
ONE
ONE

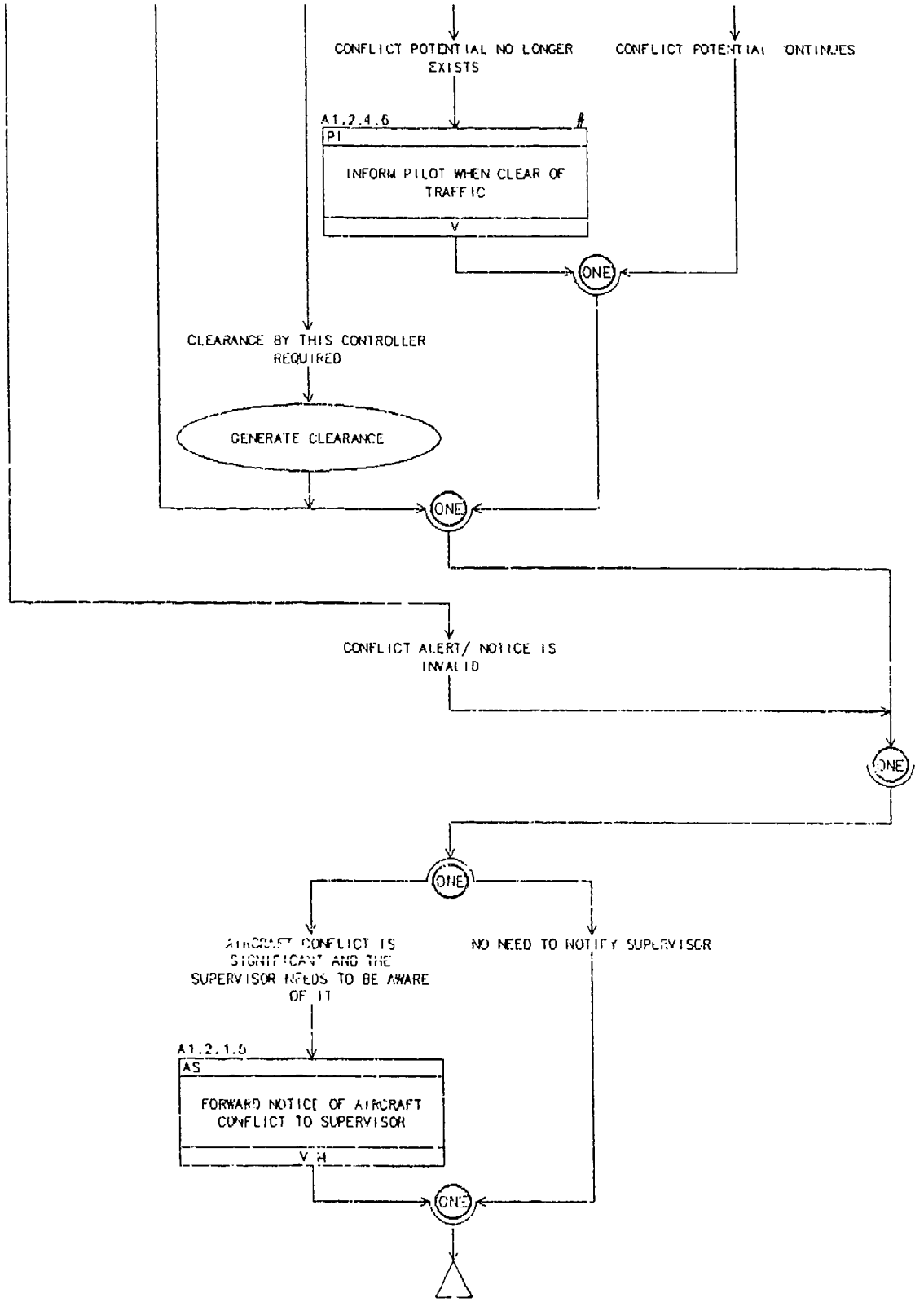
CONFLICT POTENTIAL NO LONGER EXISTS
CONFLICT POTENTIAL CONTINUES
A1.2.4.6
PI
INFORM PILOT WHEN CLEAR OF TRAFFIC
ONE
CLEARANCE BY THIS CONTROLLER REQUIRED
GENERATE CLEARANCE
ONE
CONFLICT ALERT/ NOTICE IS INVALID
ONE
ONE
AIRCRAFT CONFLICT IS SIGNIFICANT AND THE SUPERVISOR NEEDS TO BE AWARE OF IT
NO NEED TO NOTIFY SUPERVISOR
A1.2.1.5
AS
FORWARD NOTICE OF AIRCRAFT CONFLICT TO SUPERVISOR
V H
ONE

A1.2.2 PERFORMING MINIMUM SAFE ALTITUDE PROCESSING

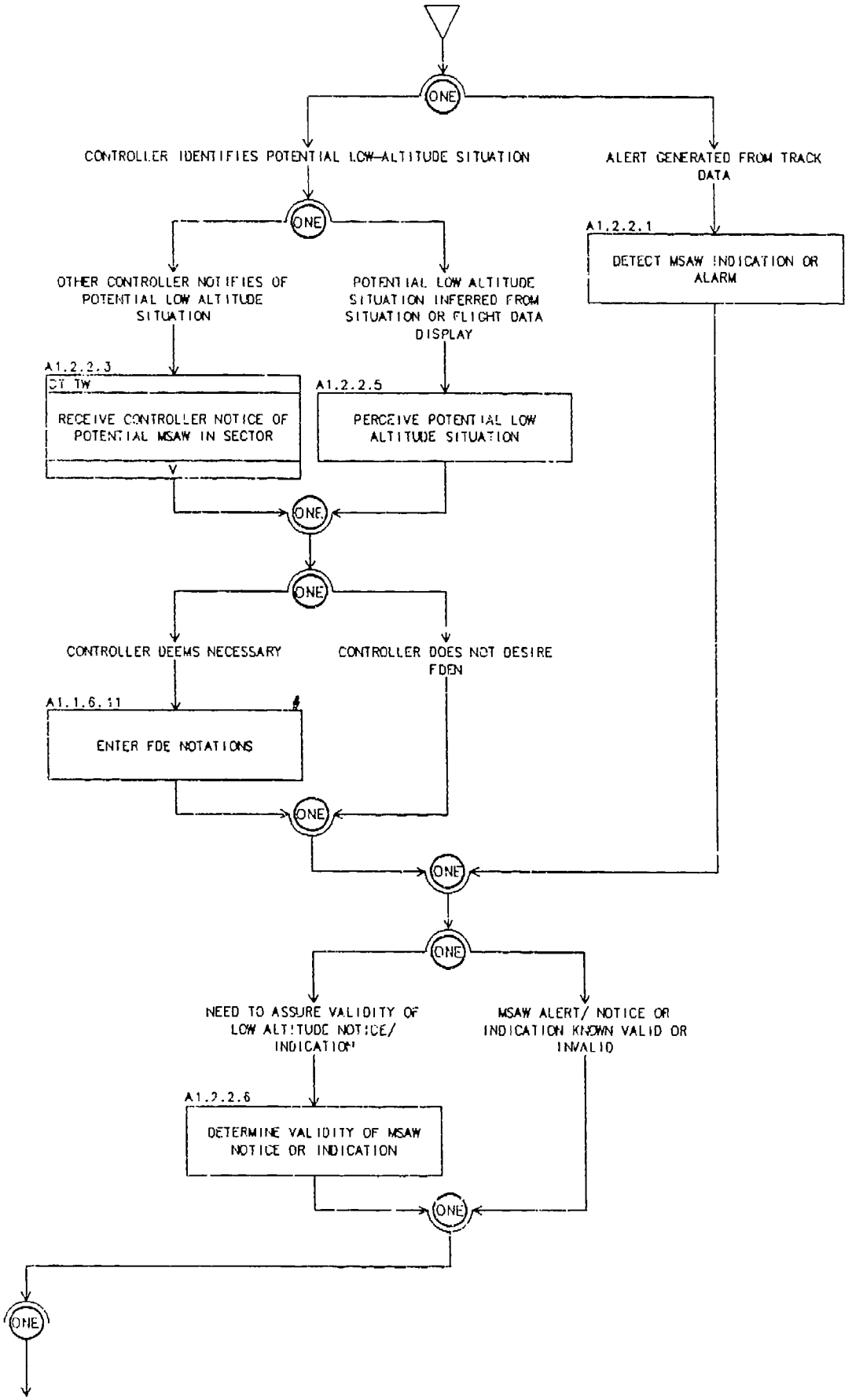

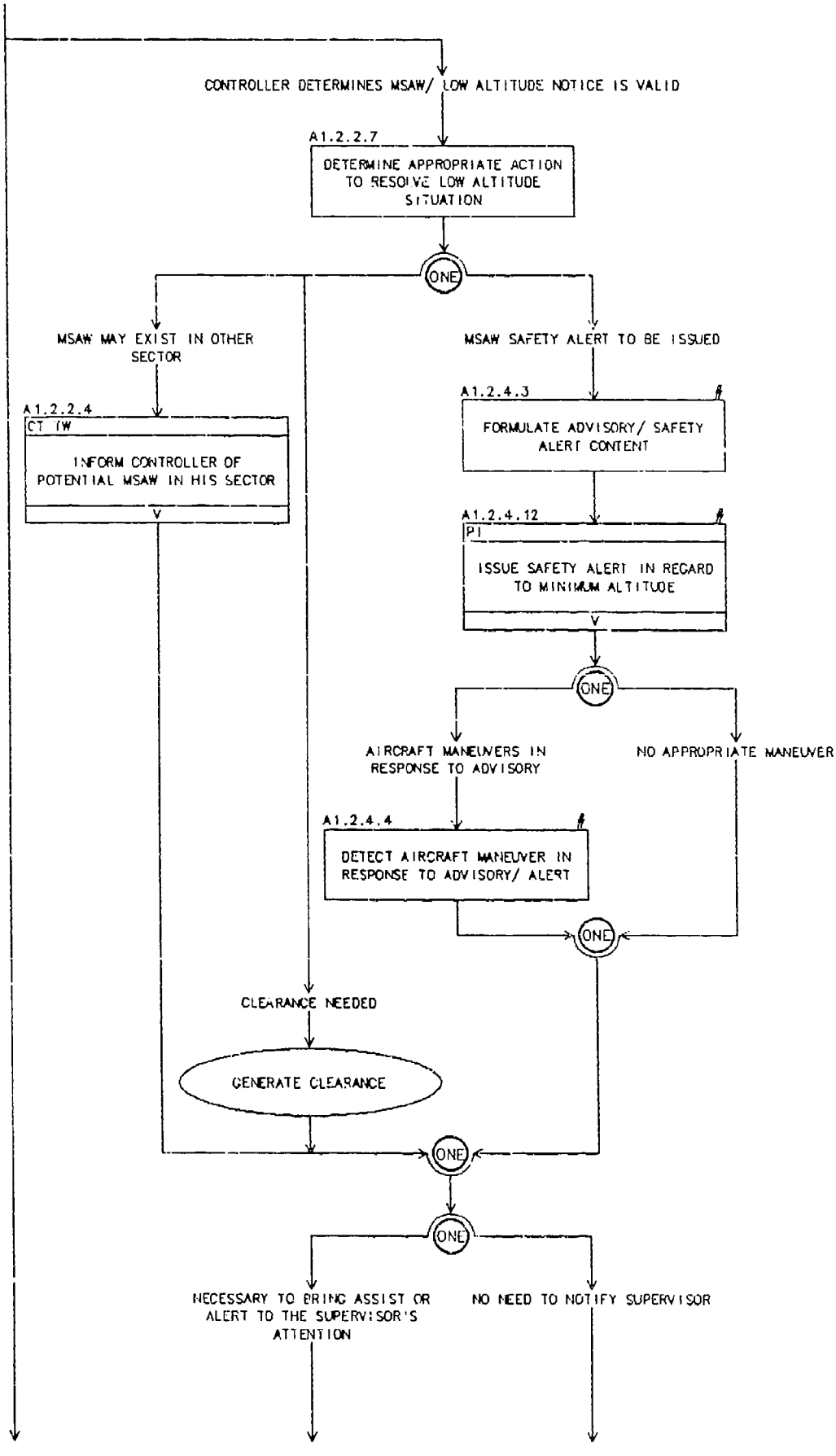
CONTROLLER DETERMINES MSAW/ LOW ALTITUDE NOTICE IS VALID
A1.2.2.7
DETERMINE APPROPRIATE ACTION TO RESOLVE LOW ALTITUDE SITUATION
ONE
MSAW MAY EXIST IN OTHER SECTOR
MSAW SAFETY ALERT TO BE ISSUED
A1.2.2.4
CT IW
INFORM CONTROLLER OF POTENTIAL MSAW IN HIS SECTOR
A1.2.4.3
FORMULATE ADVISORY/ SAFETY ALERT CONTENT
A1.2.4.12
PI
ISSUE SAFETY ALERT IN REGARD TO MINIMUM ALTITUDE
ONE
AIRCRAFT MANEUVERS IN RESPONSE TO ADVISORY
NO APPROPRIATE MANEUVER
A1.2.4.4
DETECT AIRCRAFT MANEUVER IN RESPONSE TO ADVISORY/ ALERT
ONE
CLEARANCE NEEDED
GENERATE CLEARANCE
ONE
ONE
NECESSARY TO BRING ASSIST OR ALERT TO THE SUPERVISOR'S ATTENTION
NO NEED TO NOTIFY SUPERVISOR

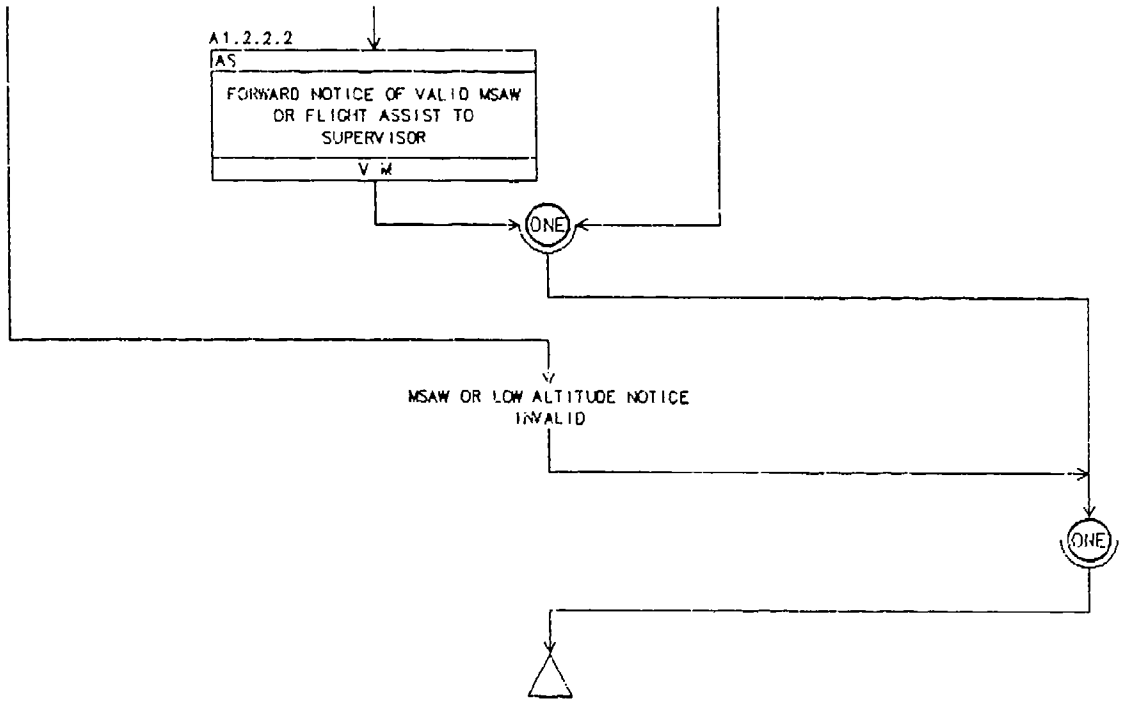
A1.2.2.2
AS
FORWARD NOTICE OF VALID MSAW OR FLIGHT ASSIST TO SUPERVISOR
V M
ONE
MSAW OR LOW ALTITUDE NOTICE INVALID
ONE

A1.2.3 PERFORMING AIRSPACE CONFLICT PROCESSING

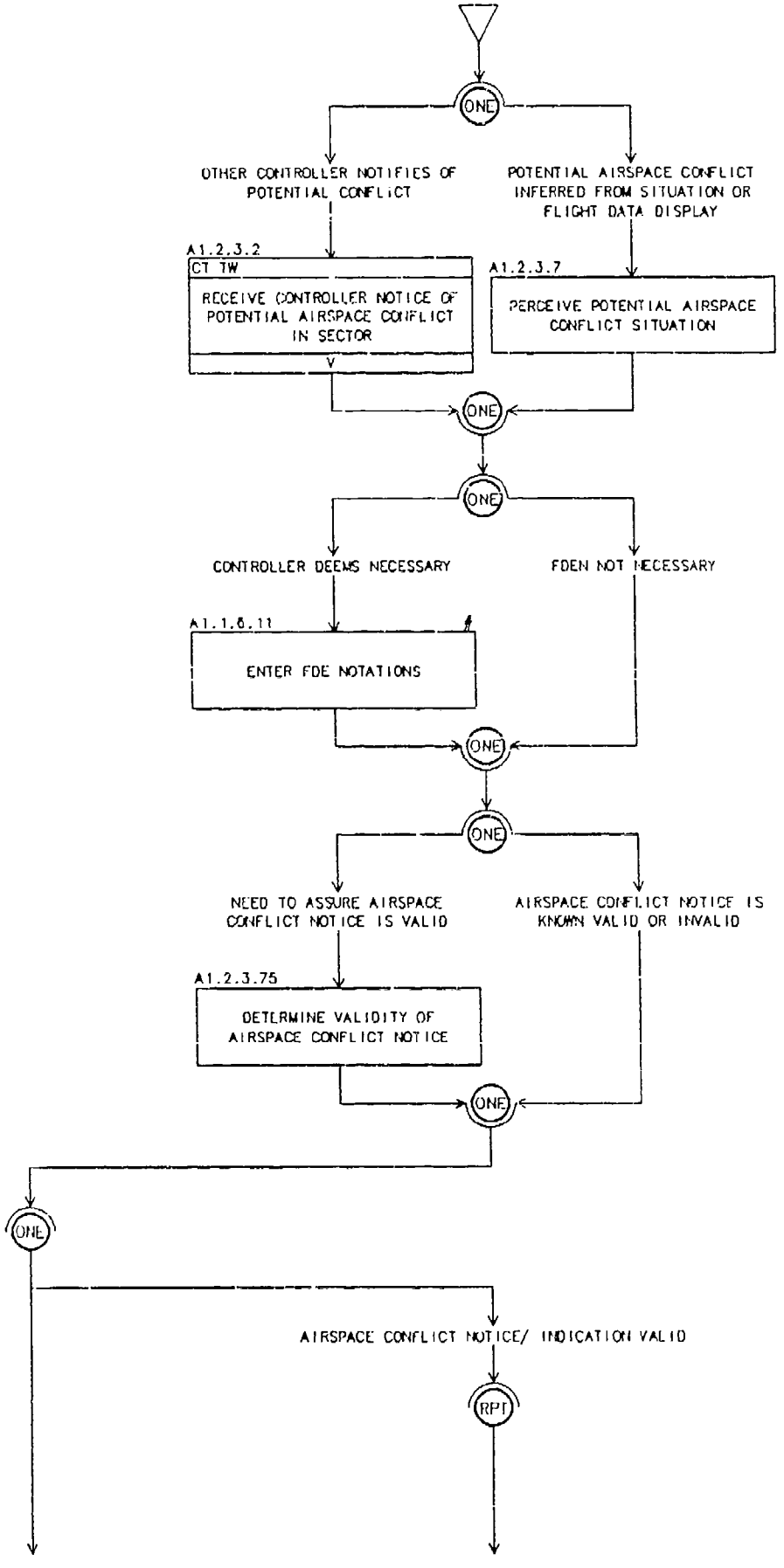

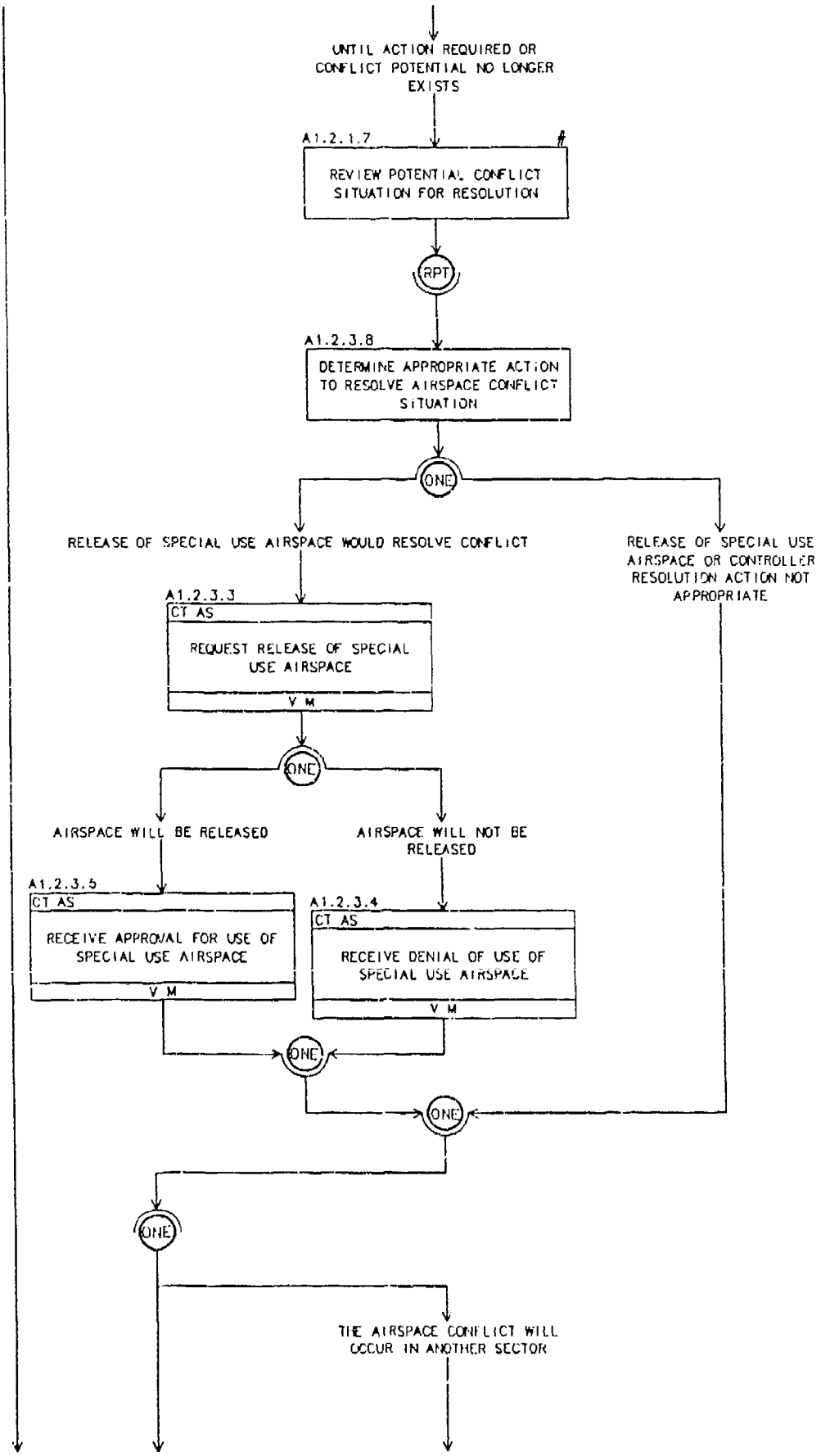
UNTIL ACTION REQUIRED OR CONFLICT POTENTIAL NO LONGER EXISTS
A1.2.1.7
#
REVIEW POTENTIAL CONFLICT SITUATION FOR RESOLUTION
RPT
A1.2.3.8
DETERMINE APPROPRIATE ACTION TO RESOLVE AIRSPACE CONFLICT SITUATION
ONE
RELEASE OF SPECIAL USE AIRSPACE WOULD RESOLVE CONFLICT
RELEASE OF SPECIAL USE AIRSPACE OR CONTROLLER RESOLUTION ACTION NOT APPROPRIATE
A1.2.3.3
CT AS
REQUEST RELEASE OF SPECIAL USE AIRSPACE
V M
ONE
AIRSPACE WILL BE RELEASED
AIRSPACE WILL NOT BE RELEASED
A1.2.3.5
CT AS
RECEIVE APPROVAL FOR USE OF SPECIAL USE AIRSPACE
V M
A1.2.3.4
CT AS
RECEIVE DENIAL OF USE OF SPECIAL USE AIRSPACE
V M
ONE
ONE
ONE
THE AIRSPACE CONFLICT WILL OCCUR IN ANOTHER SECTOR

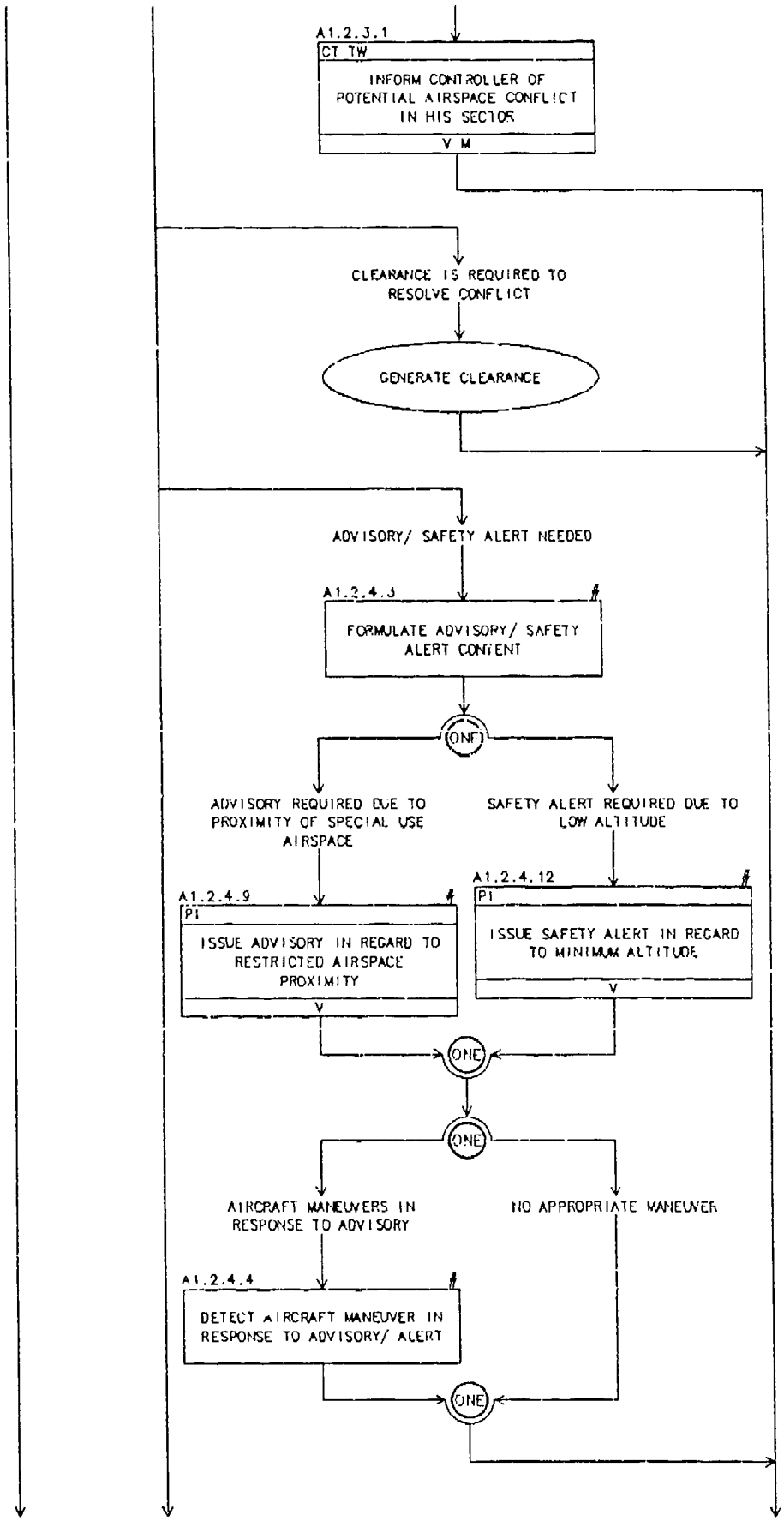
A1.2.3.1
CT TW
INFORM CONTROLLER OF POTENTIAL AIRSPACE CONFLICT IN HIS SECTOR
V M
CLEARANCE IS REQUIRED TO RESOLVE CONFLICT
GENERATE CLEARANCE
ADVISORY/ SAFETY ALERT NEEDED
A1.2.4.3
FORMULATE ADVISORY/ SAFETY ALERT CONTENT
ONE
ADVISORY REQUIRED DUE TO PROXIMITY OF SPECIAL USE AIRSPACE
SAFETY ALERT REQUIRED DUE TO LOW ALTITUDE
A1.2.4.9
P1
ISSUE ADVISORY IN REGARD TO RESTRICTED AIRSPACE PROXIMITY
V
A1.2.4.12
P1
ISSUE SAFETY ALERT IN REGARD TO MINIMUM ALTITUDE
V
ONE
ONE
AIRCRAFT MANEUVERS IN RESPONSE TO ADVISORY
NO APPROPRIATE MANEUVER
A1.2.4.4
DETECT AIRCRAFT MANEUVER IN RESPONSE TO ADVISORY/ ALERT
ONE

A1.2.3 PERFORMING AIRSPACE CONFLICT PROCESSING (cont.)

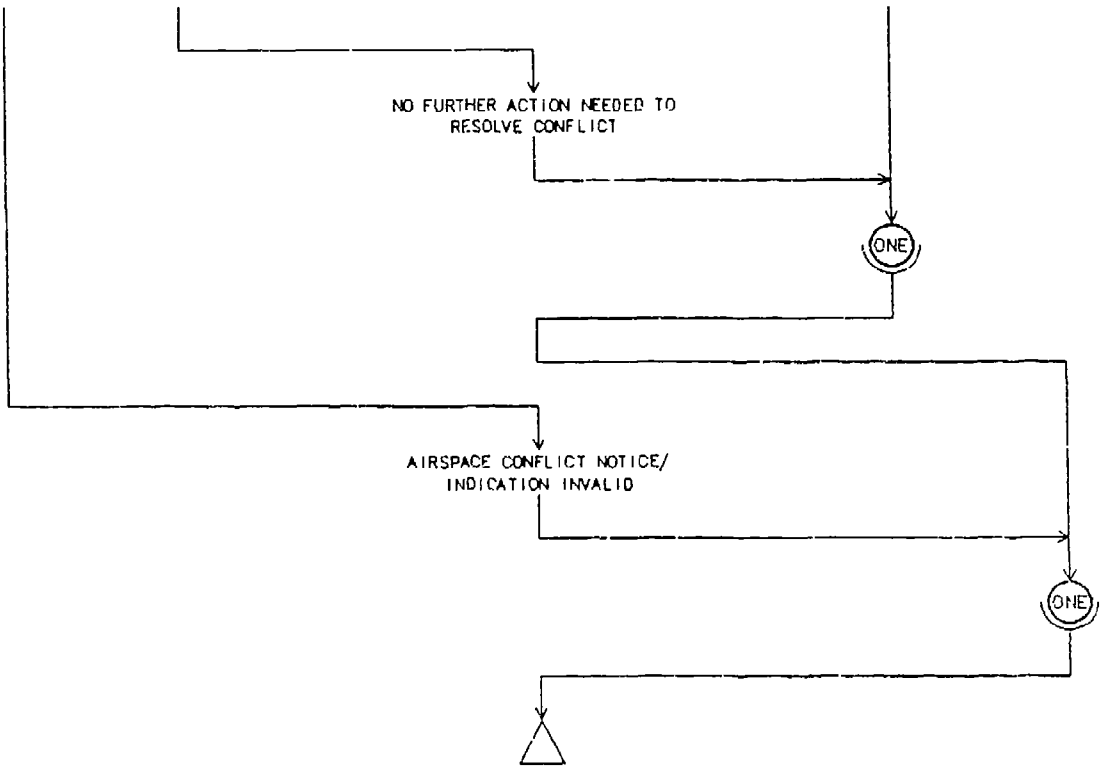

A1.2.4 ISSUING UNSAFE CONDITION ADVISORIES

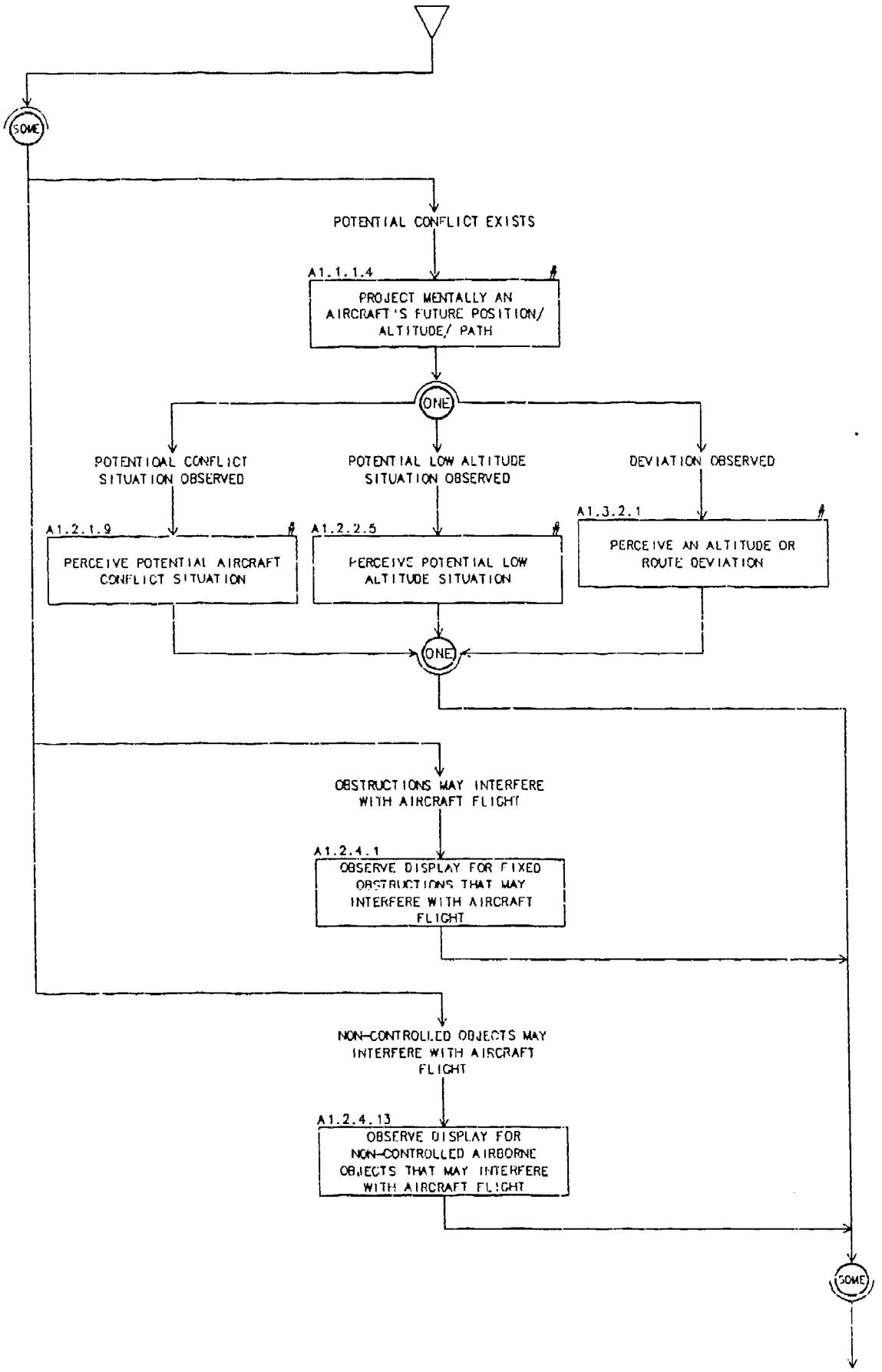

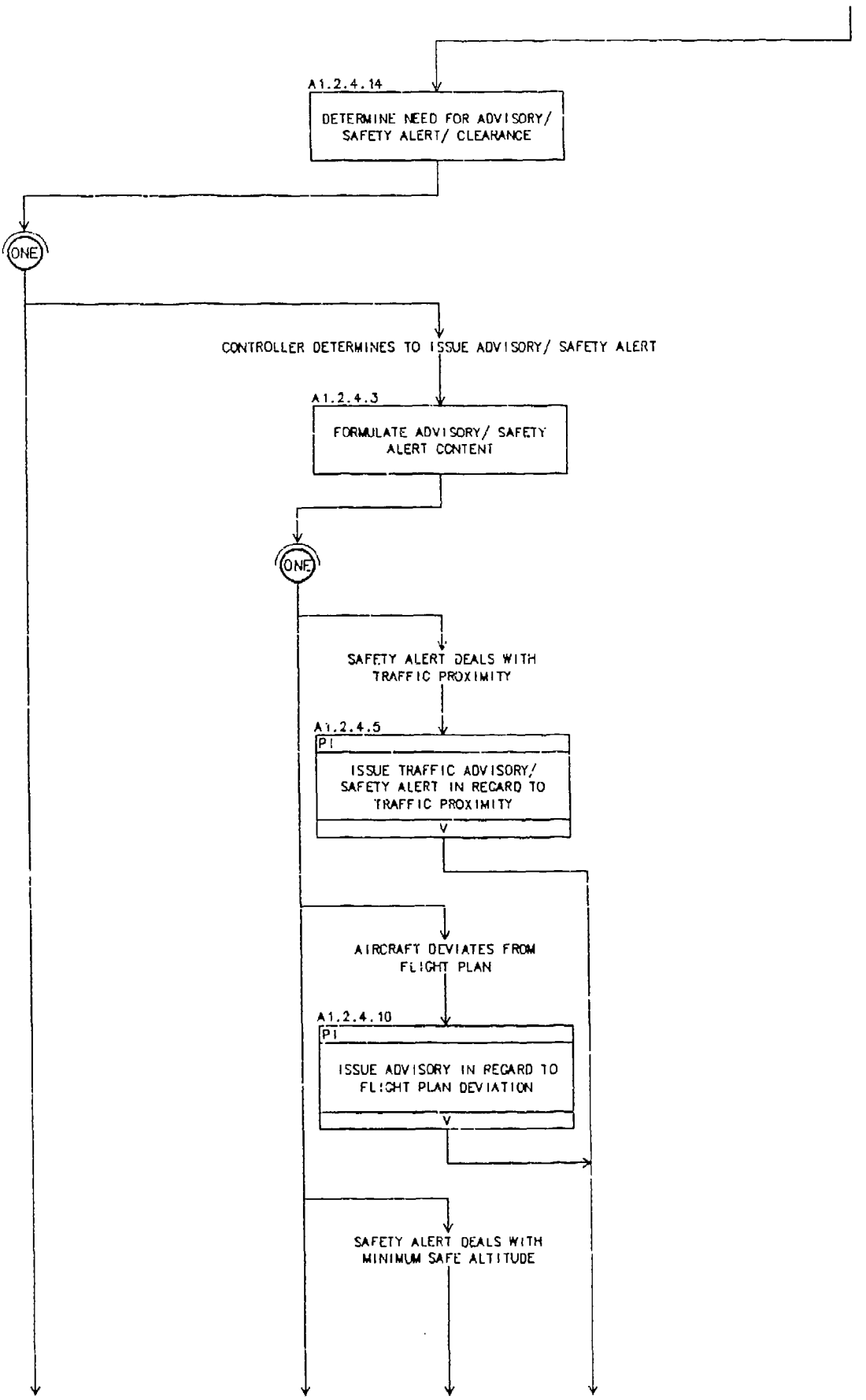
A1.2.4.14
DETERMINE NEED FOR ADVISORY/ SAFETY ALERT/ CLEARANCE
ONE
CONTROLLER DETERMINES TO ISSUE ADVISORY/ SAFETY ALERT
A1.2.4.3
FORMULATE ADVISORY/ SAFETY ALERT CONTENT
ONE
SAFETY ALERT DEALS WITH TRAFFIC PROXIMITY
A1.2.4.5
P1
ISSUE TRAFFIC ADVISORY/ SAFETY ALERT IN REGARD TO TRAFFIC PROXIMITY
AIRCRAFT DEVIATES FROM FLIGHT PLAN
A1.2.4.10
P1
ISSUE ADVISORY IN REGARD TO FLIGHT PLAN DEVIATION
SAFETY ALERT DEALS WITH MINIMUM SAFE ALTITUDE

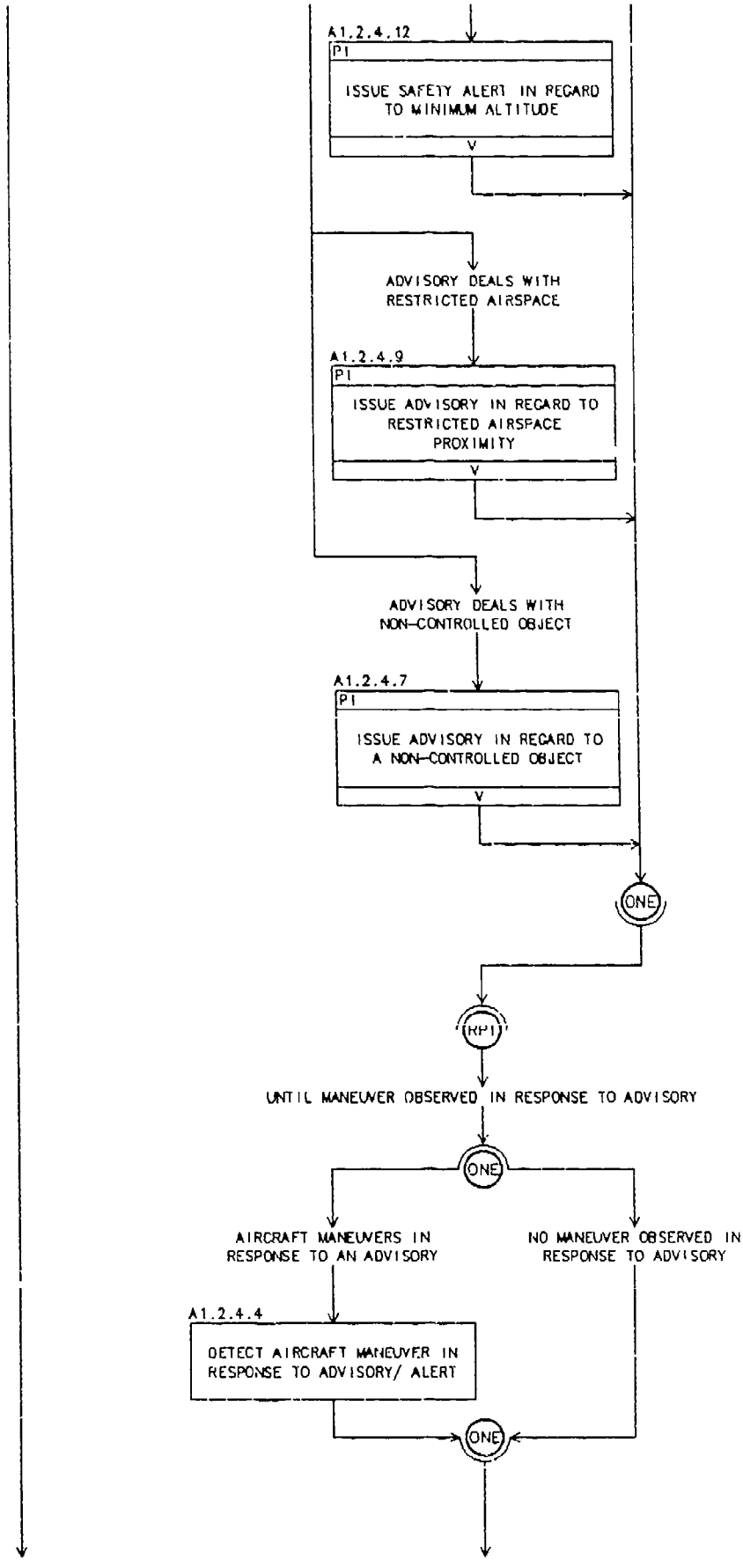
A1.2.4.12
P1
ISSUE SAFETY ALERT IN REGARD TO MINIMUM ALTITUDE
ADVISORY DEALS WITH RESTRICTED AIRSPACE
A1.2.4.9
P1
ISSUE ADVISORY IN REGARD TO RESTRICTED AIRSPACE PROXIMITY
ADVISORY DEALS WITH NON-CONTROLLED OBJECT
A1.2.4.7
P1
ISSUE ADVISORY IN REGARD TO A NON-CONTROLLED OBJECT
ONE
KP1
UNTIL MANEUVER OBSERVED IN RESPONSE TO ADVISORY
ONE
AIRCRAFT MANEUVERS IN RESPONSE TO AN ADVISORY
NO MANEUVER OBSERVED IN RESPONSE TO ADVISORY
A1.2.4.4
DETECT AIRCRAFT MANEUVER IN RESPONSE TO ADVISORY/ ALERT
ONE

A1.2.4 ISSUING UNSAFE CONDITION ADVISORIES (cont.)

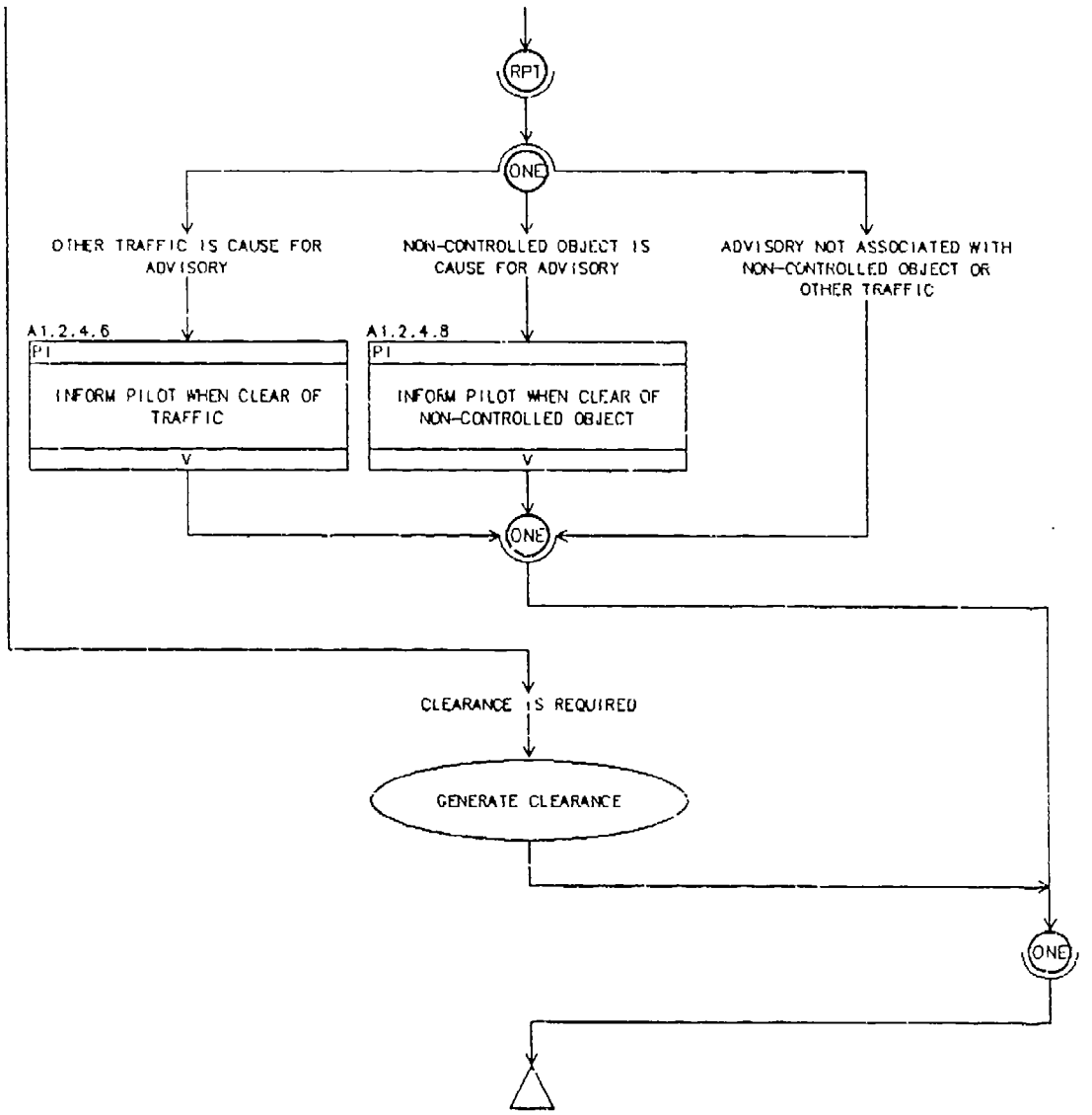

A1.2.5 SUPPRESSING ALERTS

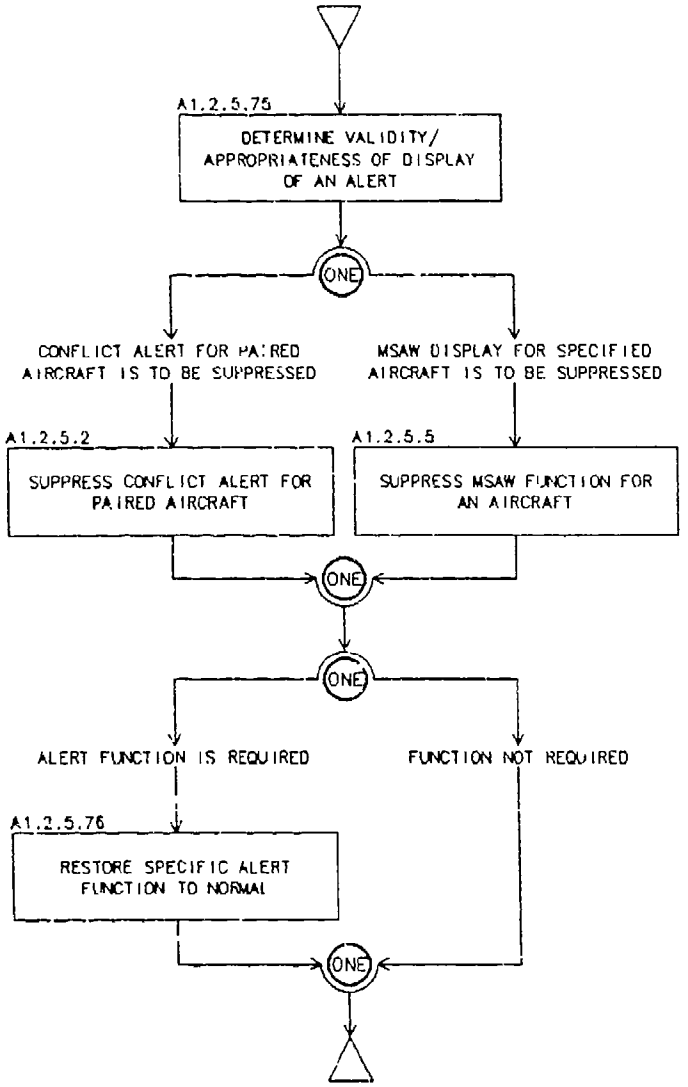

A1.3 MANAGE AIR TRAFFIC SEQUENCES

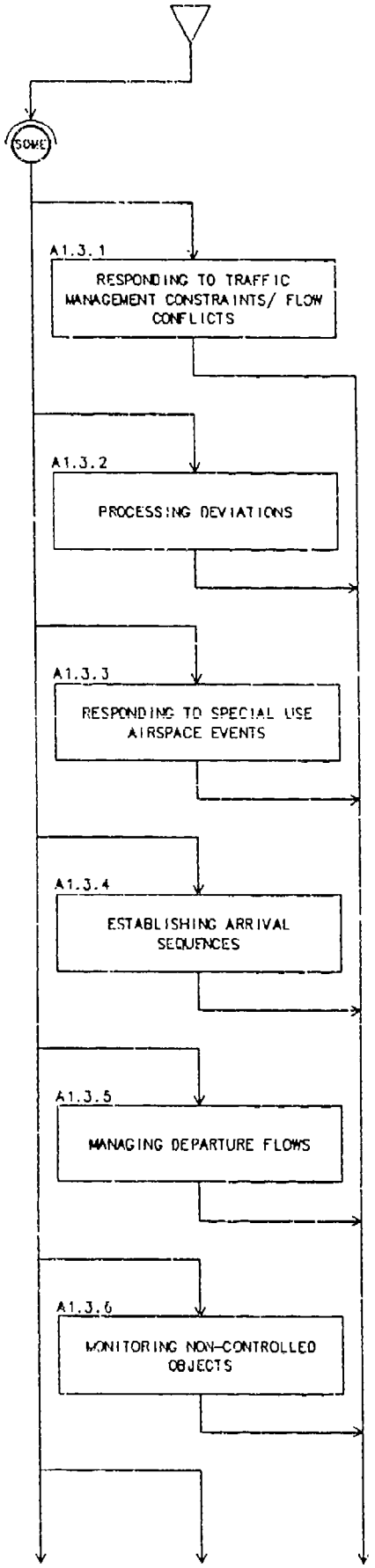

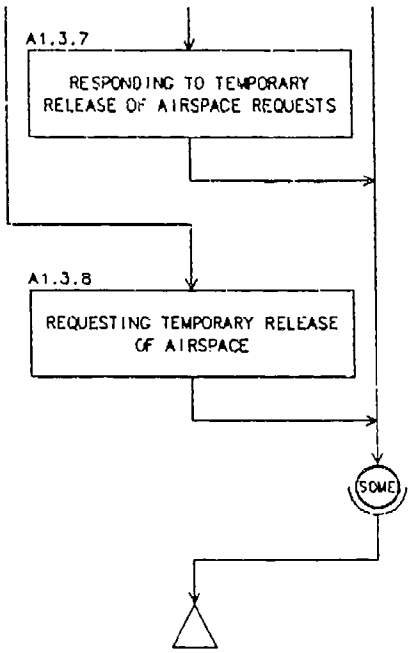
A1.3.7
RESPONDING TO TEMPORARY RELEASE OF AIRSPACE REQUESTS
A1.3.8
REQUESTING TEMPORARY RELEASE OF AIRSPACE
SOME

A1.3.1 RESPONDING TO TRAFFIC MANAGEMENT CONSTRAINTS/ FLOW CONFLICTS

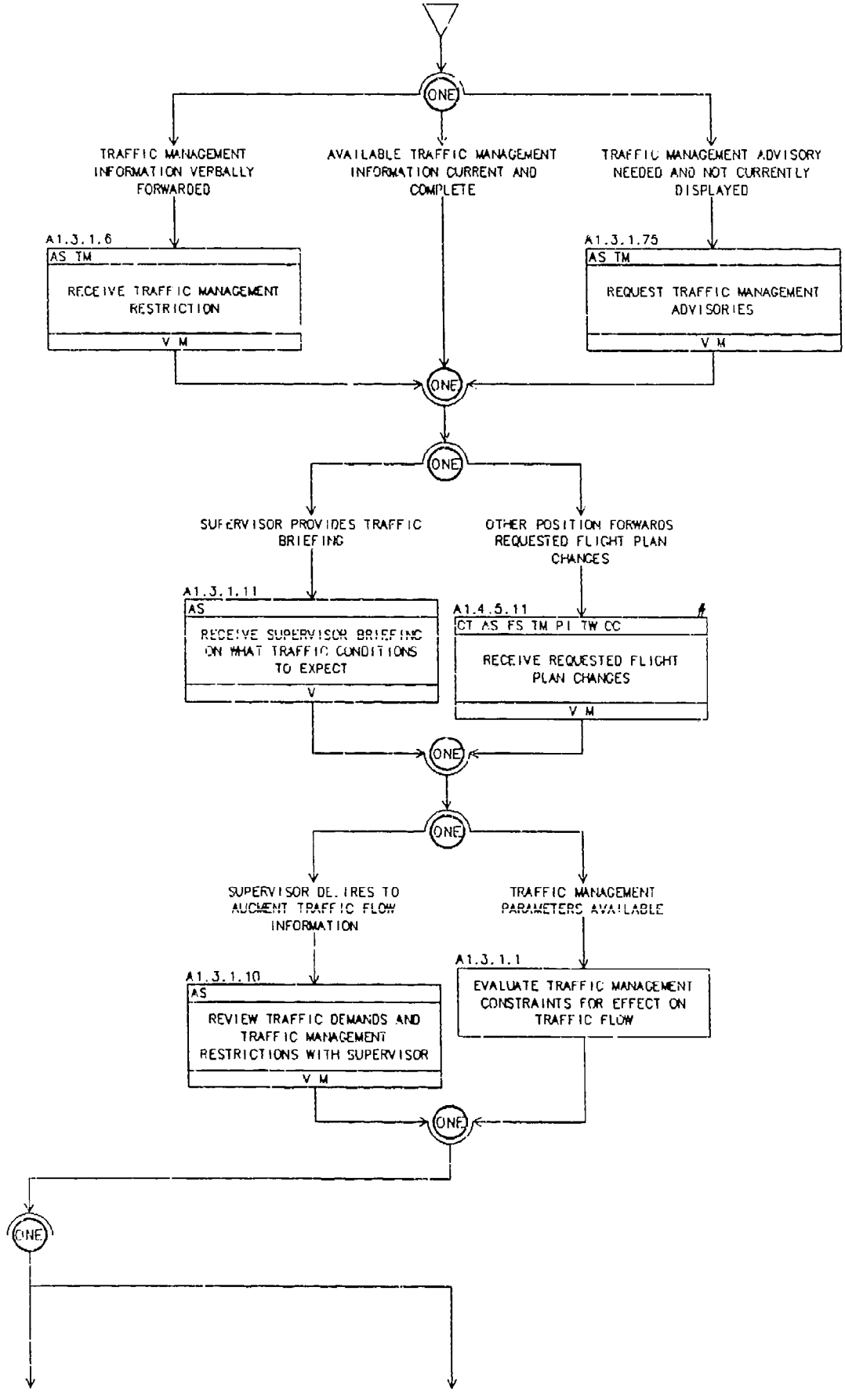

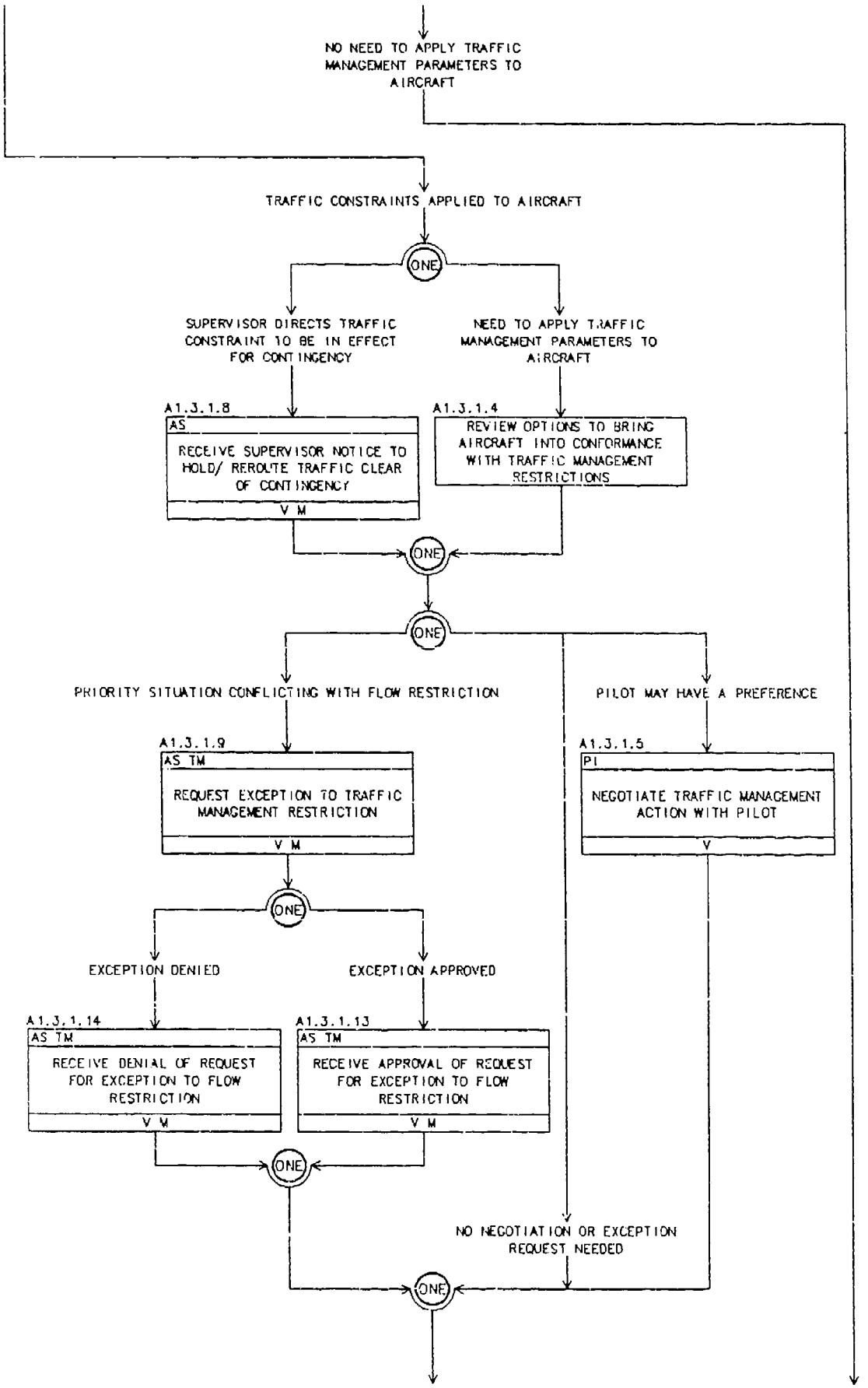
NO NEED TO APPLY TRAFFIC MANAGEMENT PARAMETERS TO AIRCRAFT
TRAFFIC CONSTRAINTS APPLIED TO AIRCRAFT
ONE
SUPERVISOR DIRECTS TRAFFIC CONSTRAINT TO BE IN EFFECT FOR CONTINGENCY
NEED TO APPLY TRAFFIC MANAGEMENT PARAMETERS TO AIRCRAFT
A1.3.1.8
AS
RECEIVE SUPERVISOR NOTICE TO HOLD/ REROUTE TRAFFIC CLEAR OF CONTINGENCY
V M
A1.3.1.4
REVIEW OPTIONS TO BRING AIRCRAFT INTO CONFORMANCE WITH TRAFFIC MANAGEMENT RESTRICTIONS
ONE
ONE
PRIORITY SITUATION CONFLICTING WITH FLOW RESTRICTION
PILOT MAY HAVE A PREFERENCE
A1.3.1.9
AS TM
REQUEST EXCEPTION TO TRAFFIC MANAGEMENT RESTRICTION
V M
A1.3.1.5
PI
NEGOTIATE TRAFFIC MANAGEMENT ACTION WITH PILOT
V
ONE
EXCEPTION DENIED
EXCEPTION APPROVED
A1.3.1.14
AS TM
RECEIVE DENIAL OF REQUEST FOR EXCEPTION TO FLOW RESTRICTION
V M
A1.3.1.13
AS TM
RECEIVE APPROVAL OF REQUEST FOR EXCEPTION TO FLOW RESTRICTION
V M
ONE
NO NEGOTIATION OR EXCEPTION REQUEST NEEDED
ONE

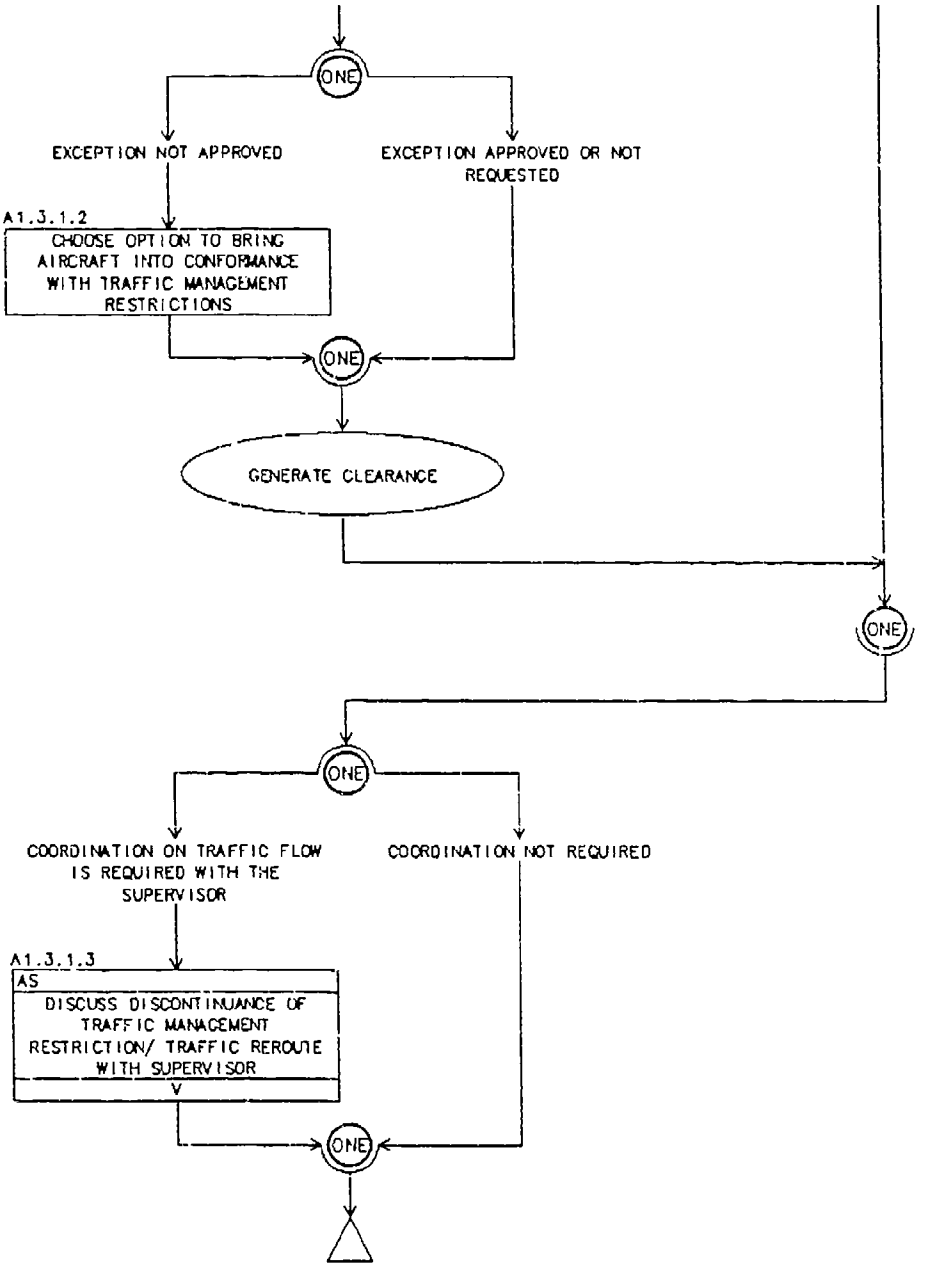
ONE
EXCEPTION NOT APPROVED
EXCEPTION APPROVED OR NOT REQUESTED
A1.3.1.2
CHOOSE OPTION TO BRING AIRCRAFT INTO CONFORMANCE WITH TRAFFIC MANAGEMENT RESTRICTIONS
ONE
GENERATE CLEARANCE
ONE
ONE
COORDINATION ON TRAFFIC FLOW IS REQUIRED WITH THE SUPERVISOR
COORDINATION NOT REQUIRED
A1.3.1.3
AS
DISCUSS DISCONTINUANCE OF TRAFFIC MANAGEMENT RESTRICTION/ TRAFFIC REROUTE WITH SUPERVISOR
V
ONE

A1.3.2 PROCESSING DEVIATIONS

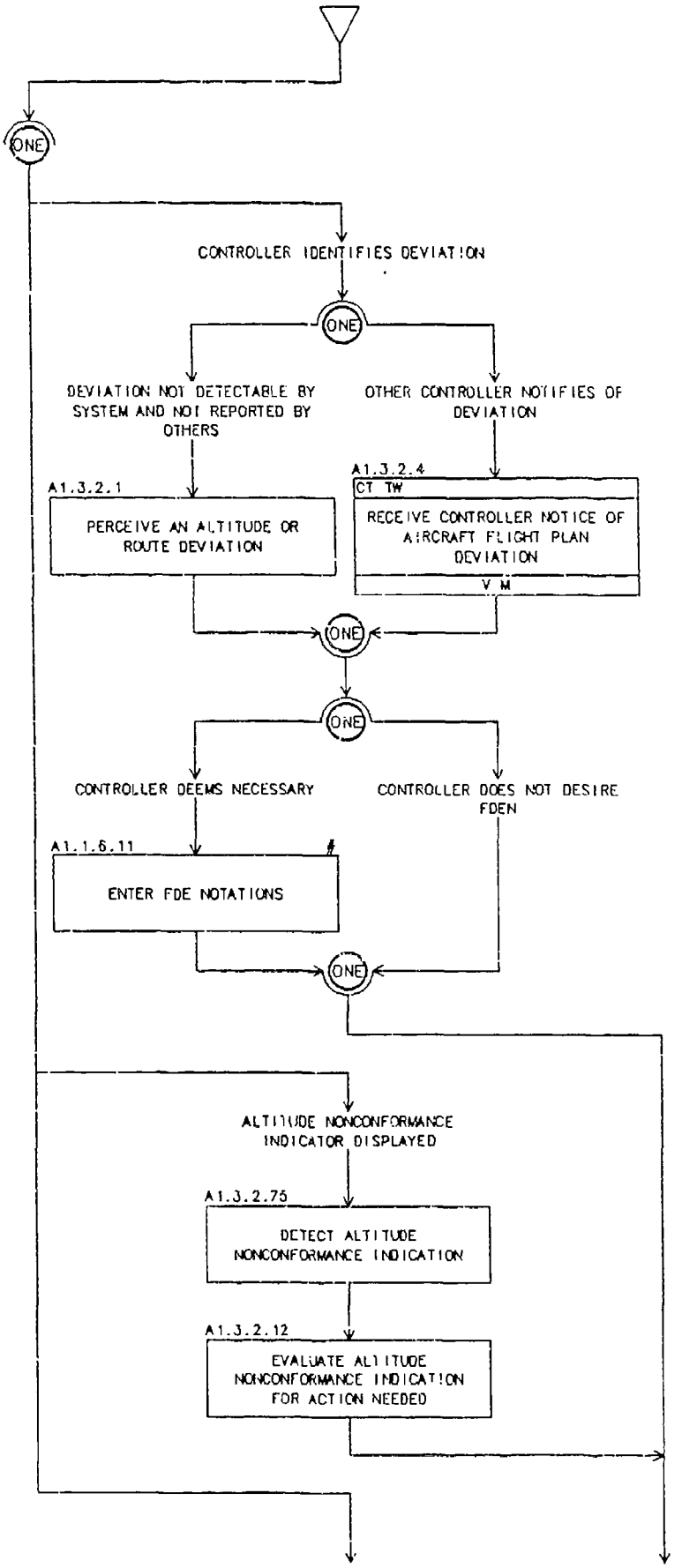

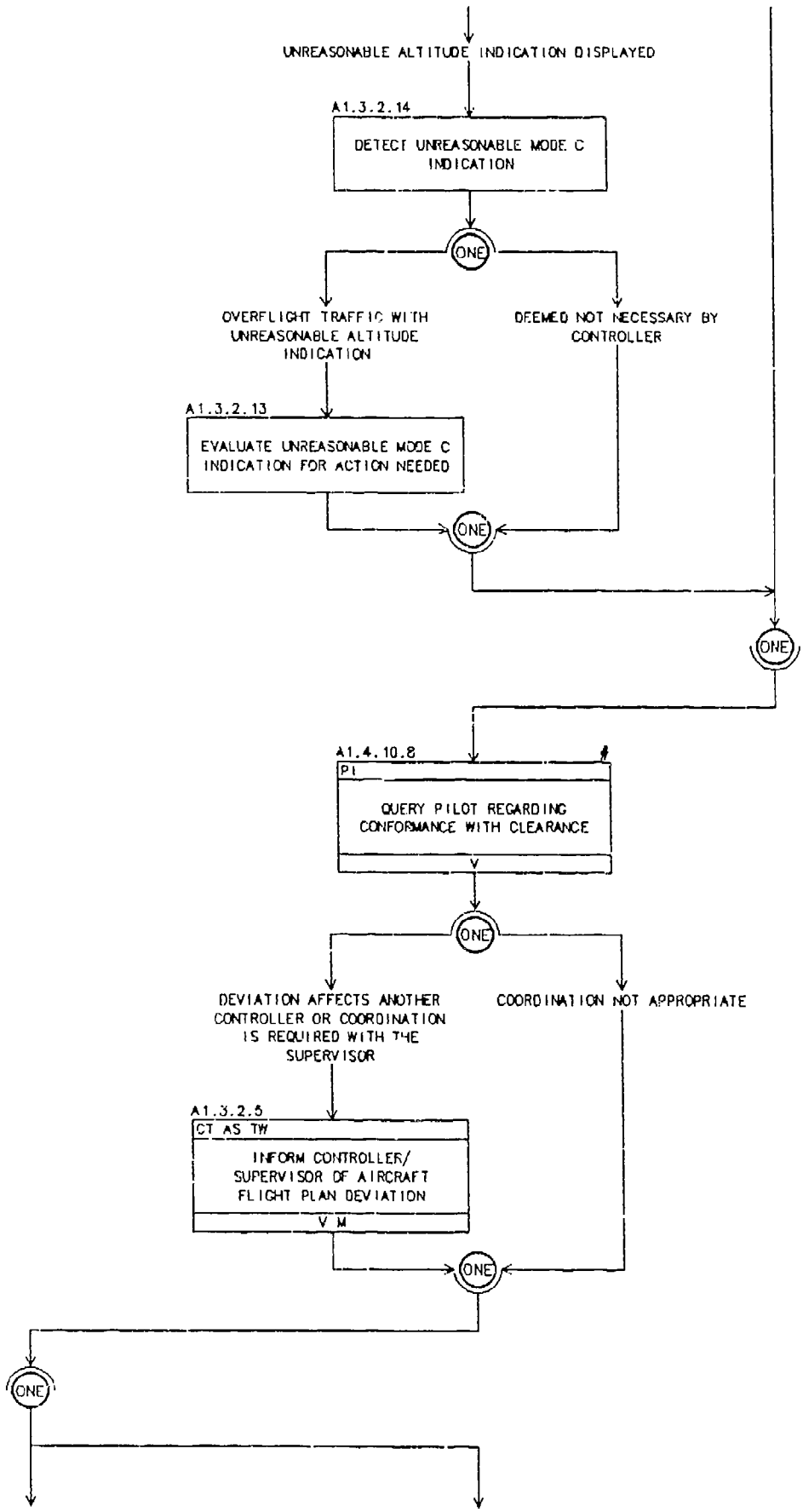
UNREASONABLE ALTITUDE INDICATION DISPLAYED
A1.3.2.14
DETECT UNREASONABLE MODE C INDICATION
ONE
OVERFLIGHT TRAFFIC WITH UNREASONABLE ALTITUDE INDICATION
DEEMED NOT NECESSARY BY CONTROLLER
A1.3.2.13
EVALUATE UNREASONABLE MODE C INDICATION FOR ACTION NEEDED
ONE
ONE
A1.4.10.8
P1
QUERY PILOT REGARDING CONFORMANCE WITH CLEARANCE
ONE
DEVIATION AFFECTS ANOTHER CONTROLLER OR COORDINATION IS REQUIRED WITH THE SUPERVISOR
COORDINATION NOT APPROPRIATE
A1.3.2.5
CT AS TW
INFORM CONTROLLER/ SUPERVISOR OF AIRCRAFT FLIGHT PLAN DEVIATION
V M
ONE
ONE

A1.3.2 PROCESSING DEVIATIONS (cont.)

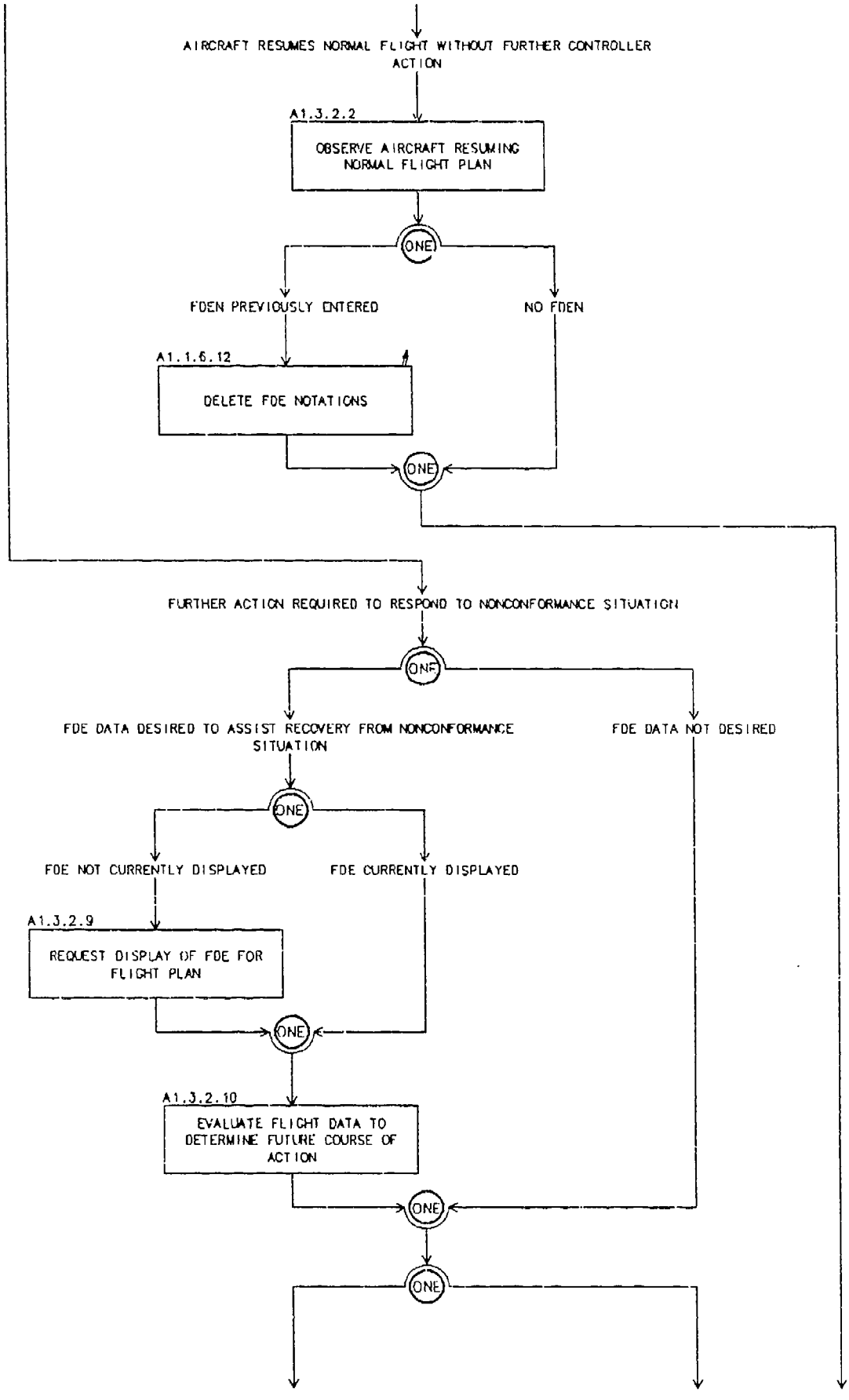

A1.3.2 PROCESSING DEVIATIONS (cont.)

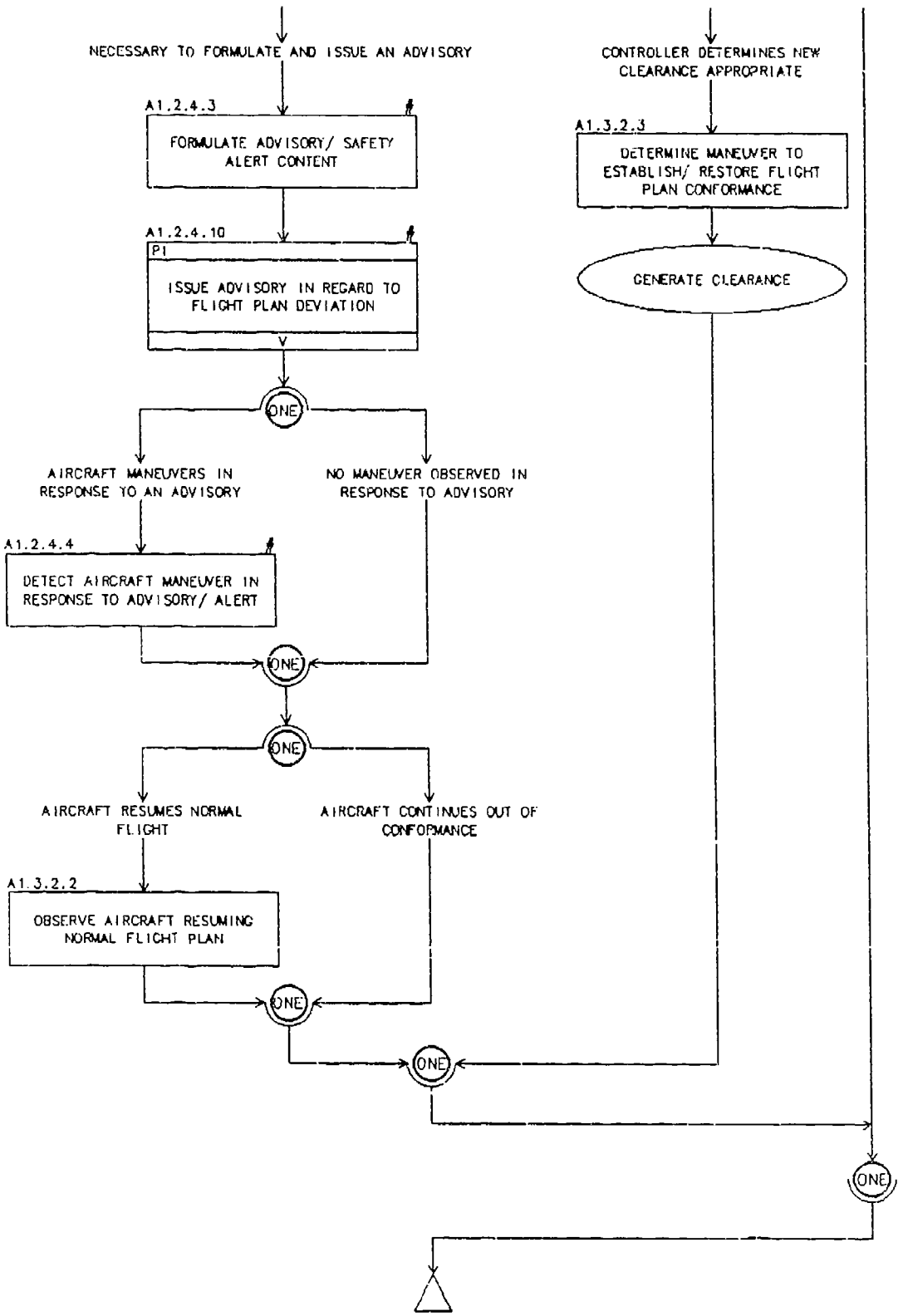

A1.3.3 RESPONDING TO SPECIAL USE AIRSPACE EVENTS

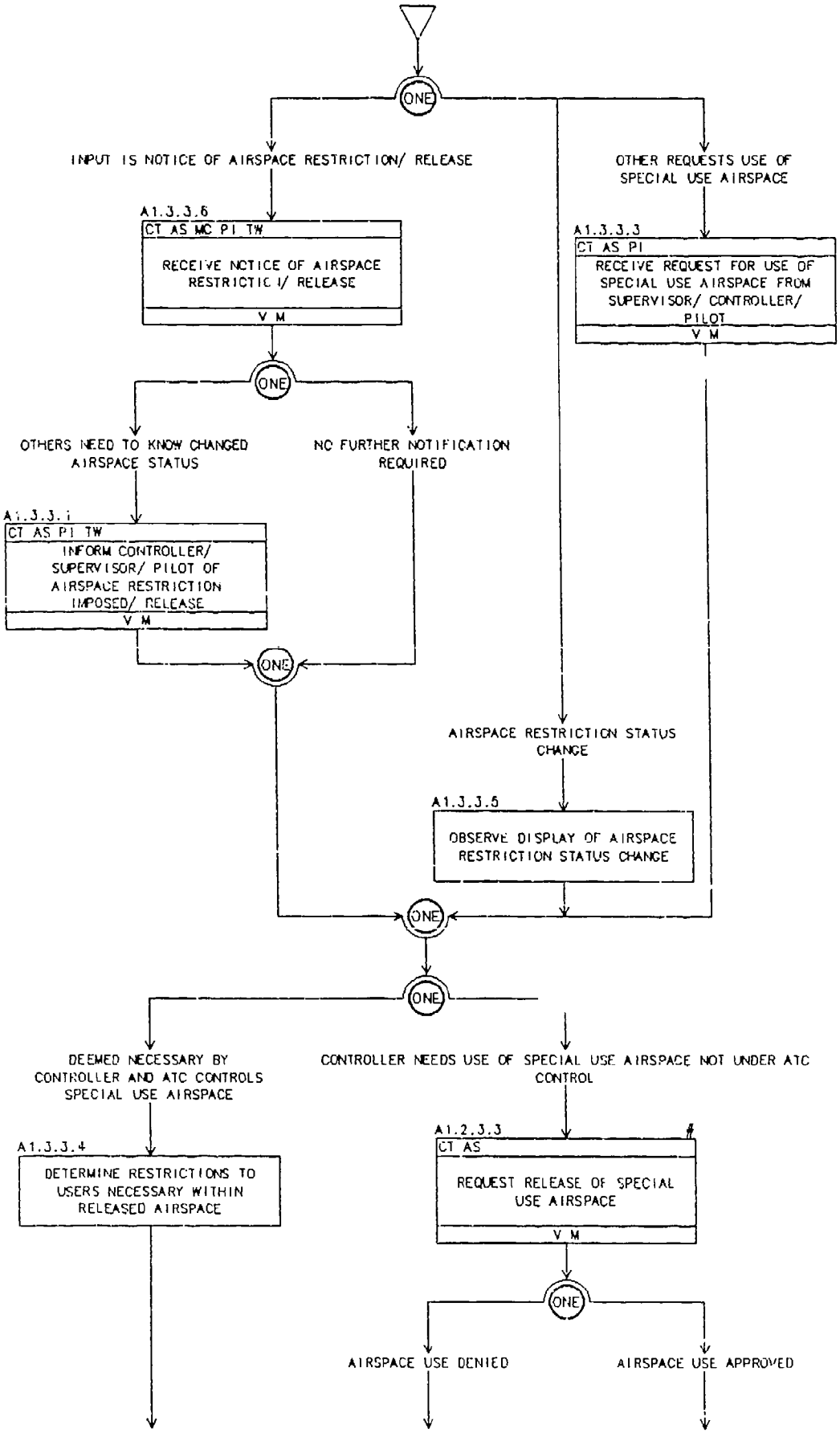

A1.3.3 RESPONDING TO SPECIAL USE AIRSPACE EVENTS (cont.)

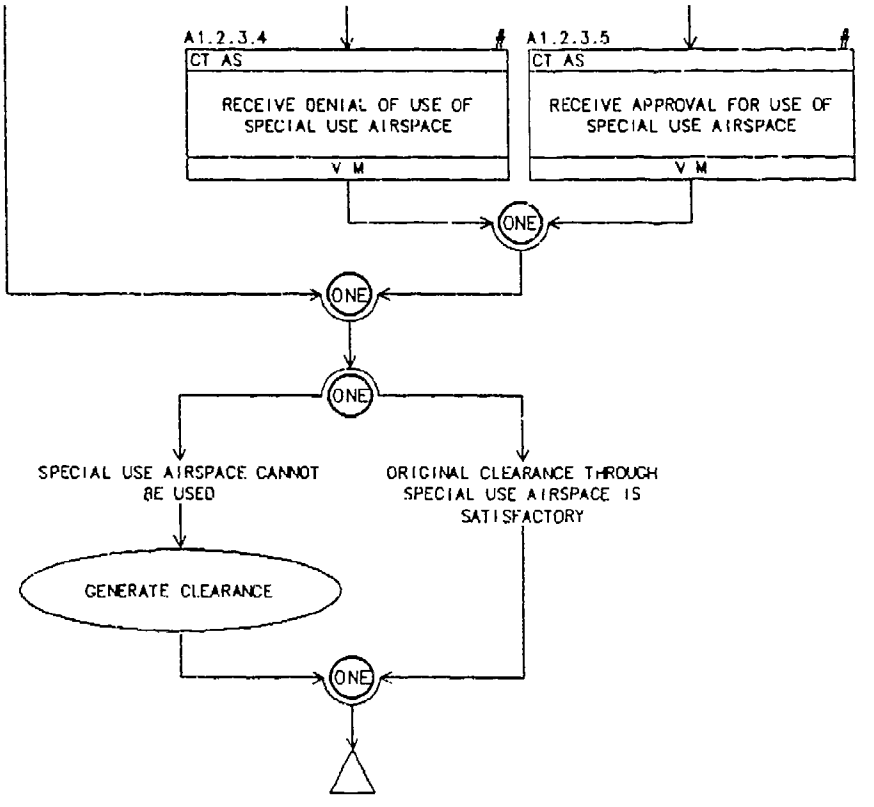

A1.3.4 ESTABLISHING ARRIVAL SEQUENCES

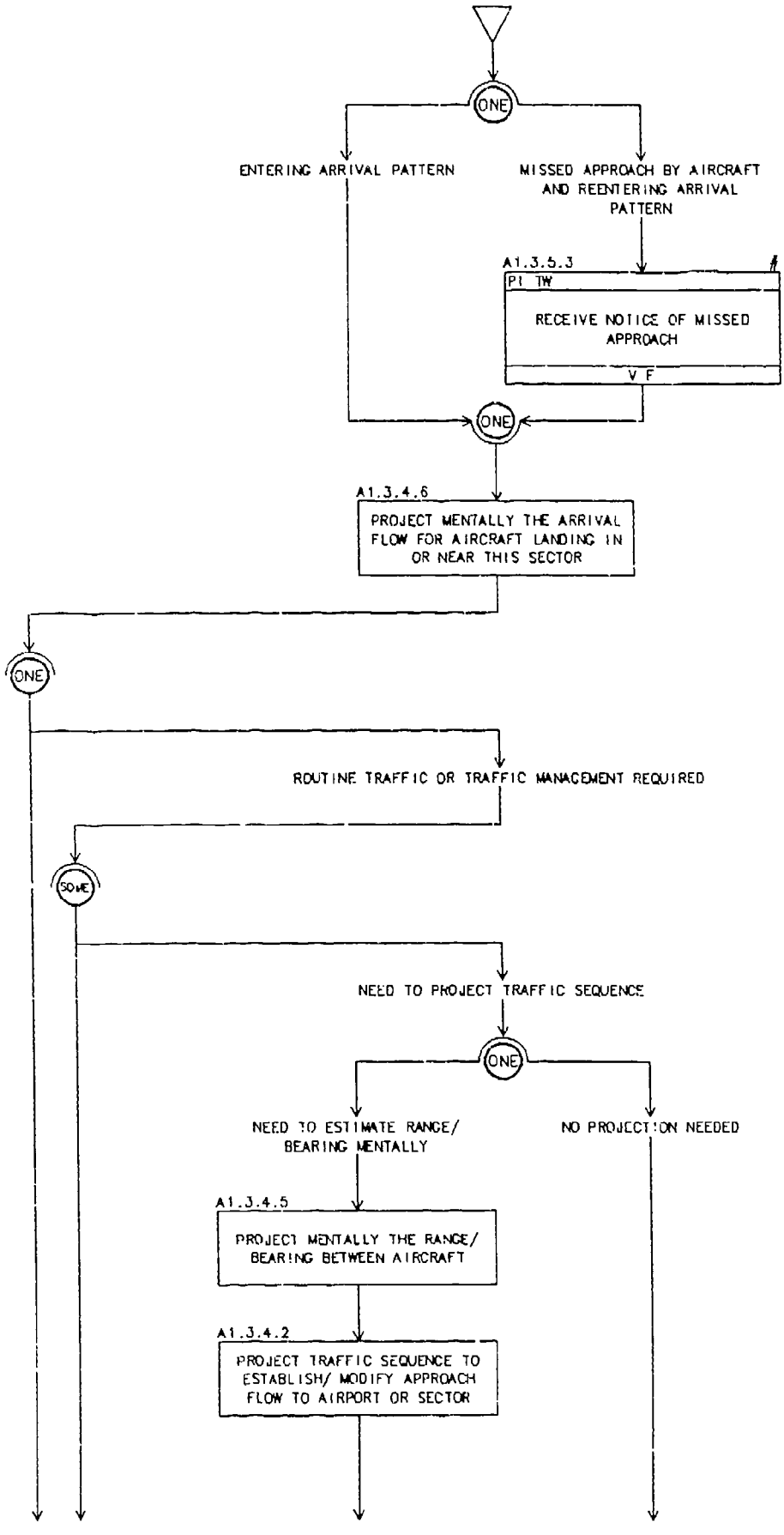

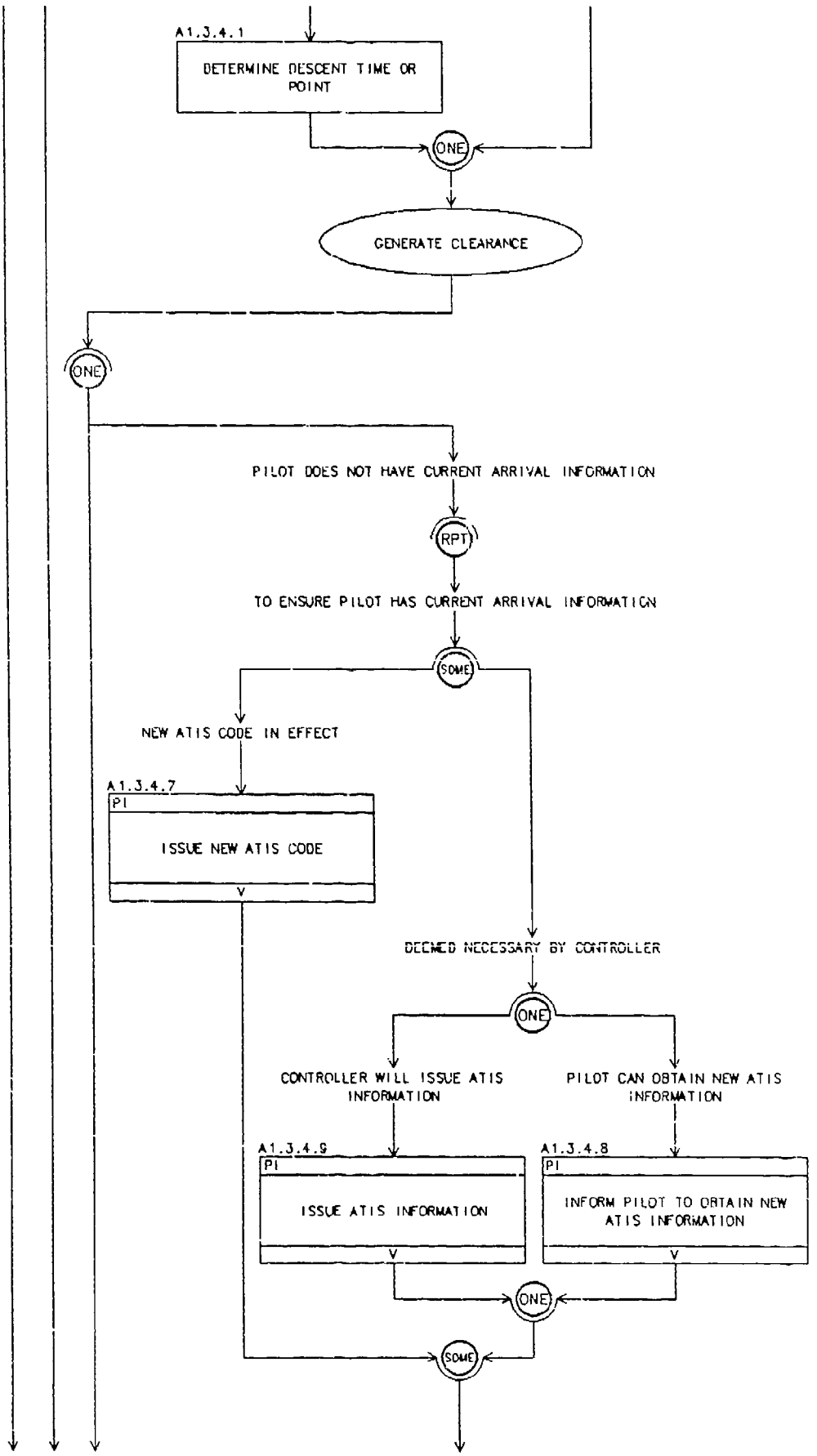
A1.3.4.1
DETERMINE DESCENT TIME OR POINT
ONE
GENERATE CLEARANCE
ONE
PILOT DOES NOT HAVE CURRENT ARRIVAL INFORMATION
RPT
TO ENSURE PILOT HAS CURRENT ARRIVAL INFORMATION
SOME
NEW ATIS CODE IN EFFECT
A1.3.4.7
PI
ISSUE NEW ATIS CODE
DEEMED NECESSARY BY CONTROLLER
ONE
CONTROLLER WILL ISSUE ATIS INFORMATION
PILOT CAN OBTAIN NEW ATIS INFORMATION
A1.3.4.9
PI
ISSUE ATIS INFORMATION
A1.3.4.8
PI
INFORM PILOT TO OBTAIN NEW ATIS INFORMATION
ONE
SOME

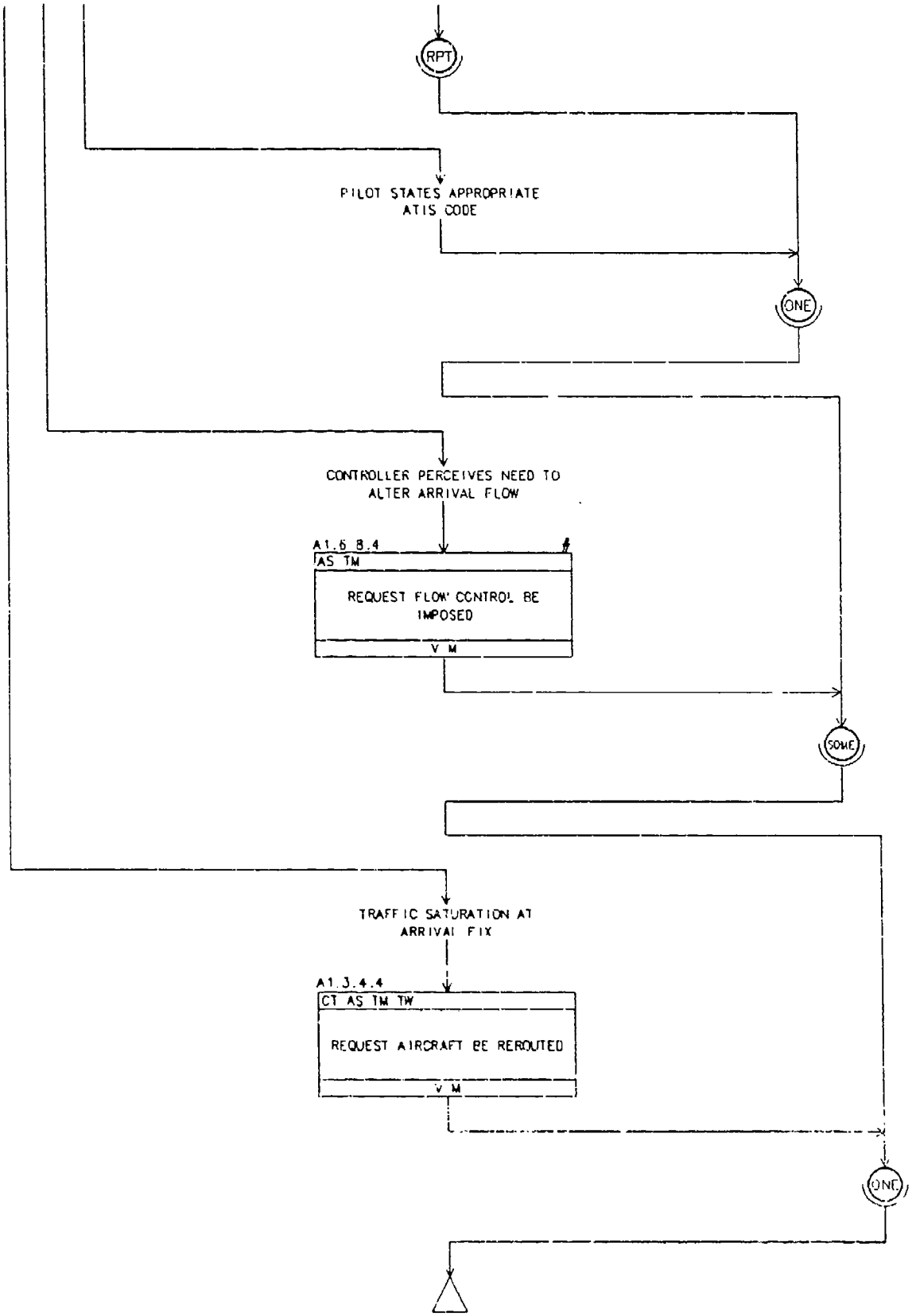
RPT
PILOT STATES APPROPRIATE ATIS CODE
ONE
CONTROLLER PERCEIVES NEED TO ALTER ARRIVAL FLOW
A1.6 B.4
AS TM
REQUEST FLOW CONTROL BE IMPOSED
V M
SOME
TRAFFIC SATURATION AT ARRIVAL FIX
A1.3.4.4
CT AS TM TW
REQUEST AIRCRAFT BE REROUTED
V M
ONE

A1.3.5 MANAGING DEPARTURE FLOWS

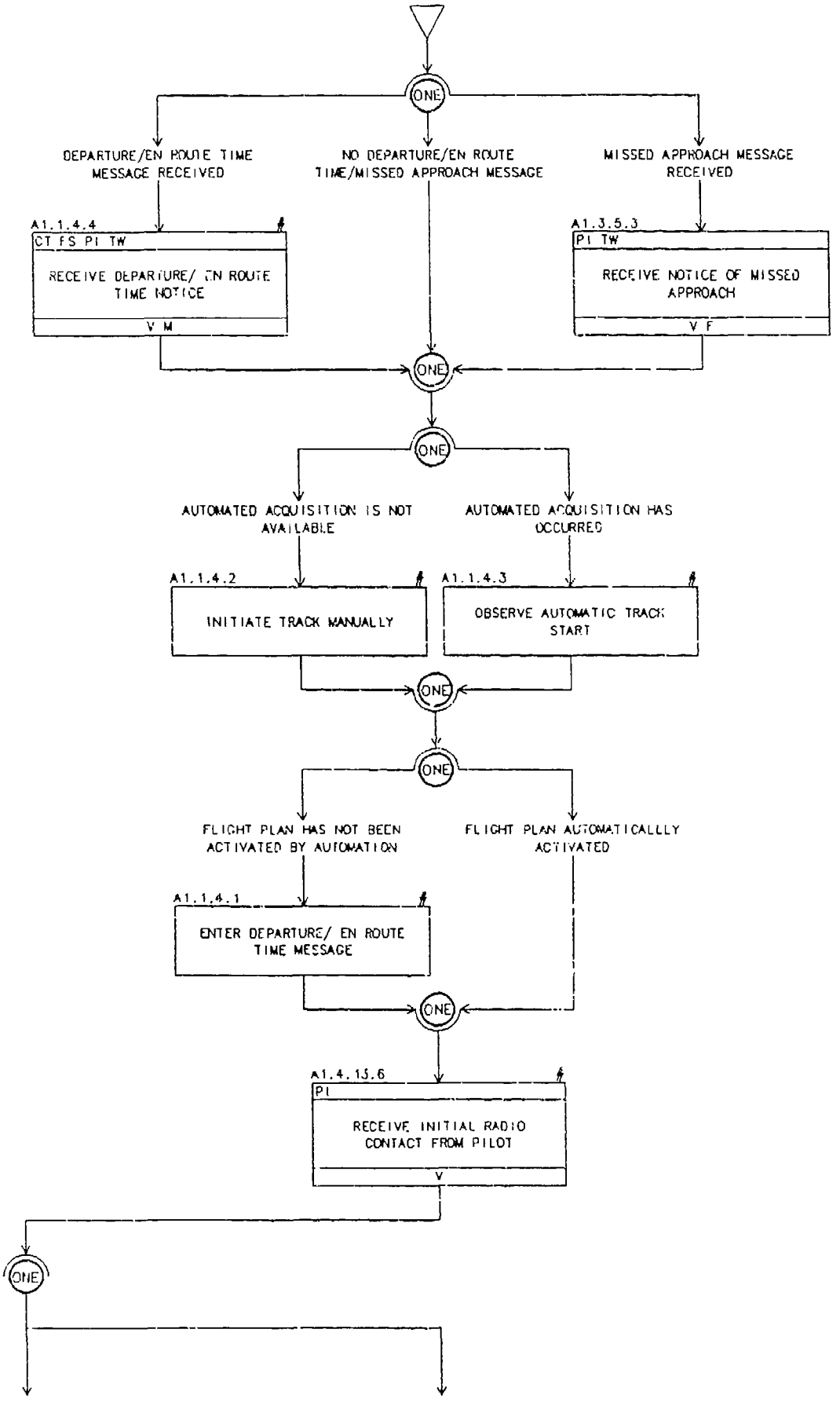

A1.3.5 MANAGING DEPARTURE FLOWS (cont.)

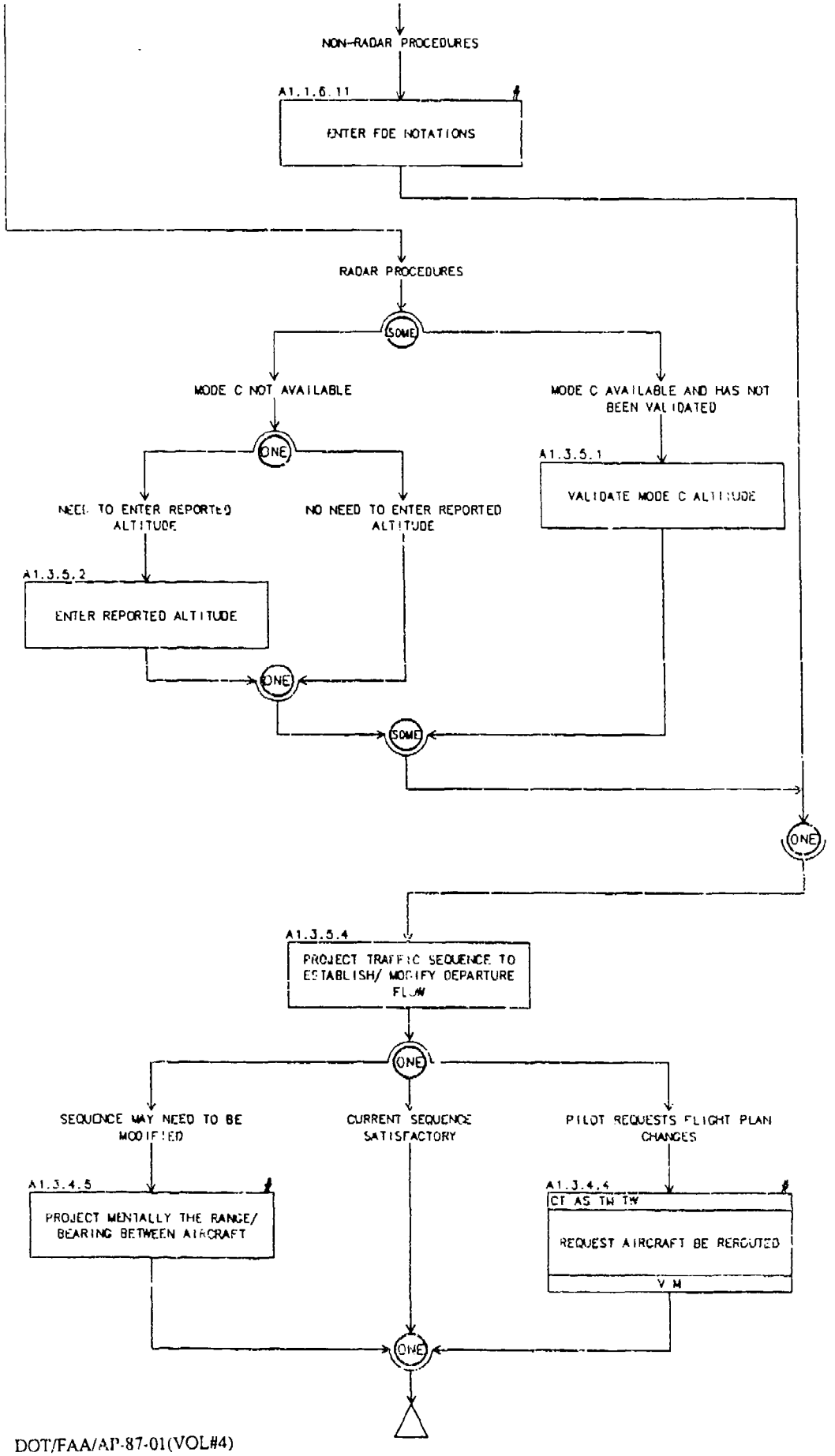

A1.3.6 MONITORING NON-CONTROLLED OBJECTS

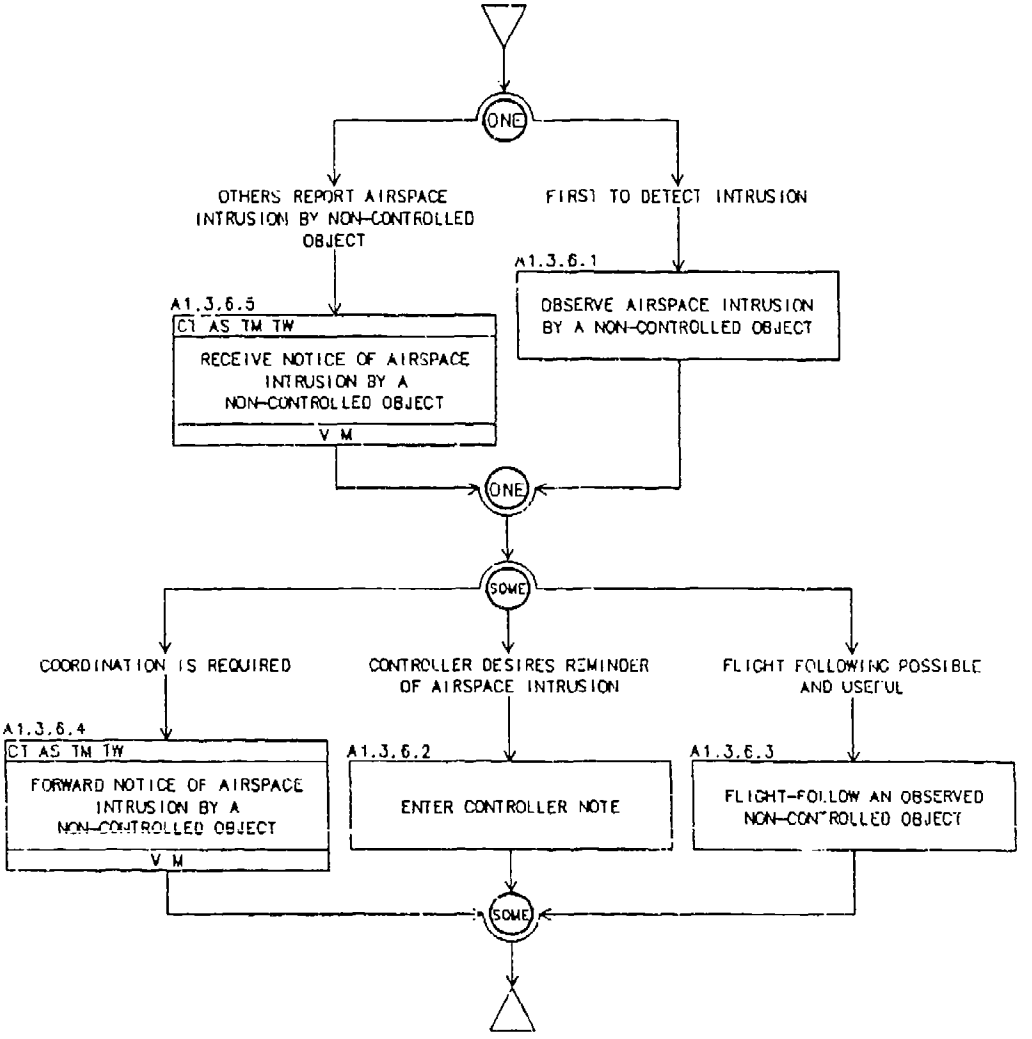

A1.3.7 RESPONDING TO TEMPORARY RELEASE OF AIRSPACE REQUESTS

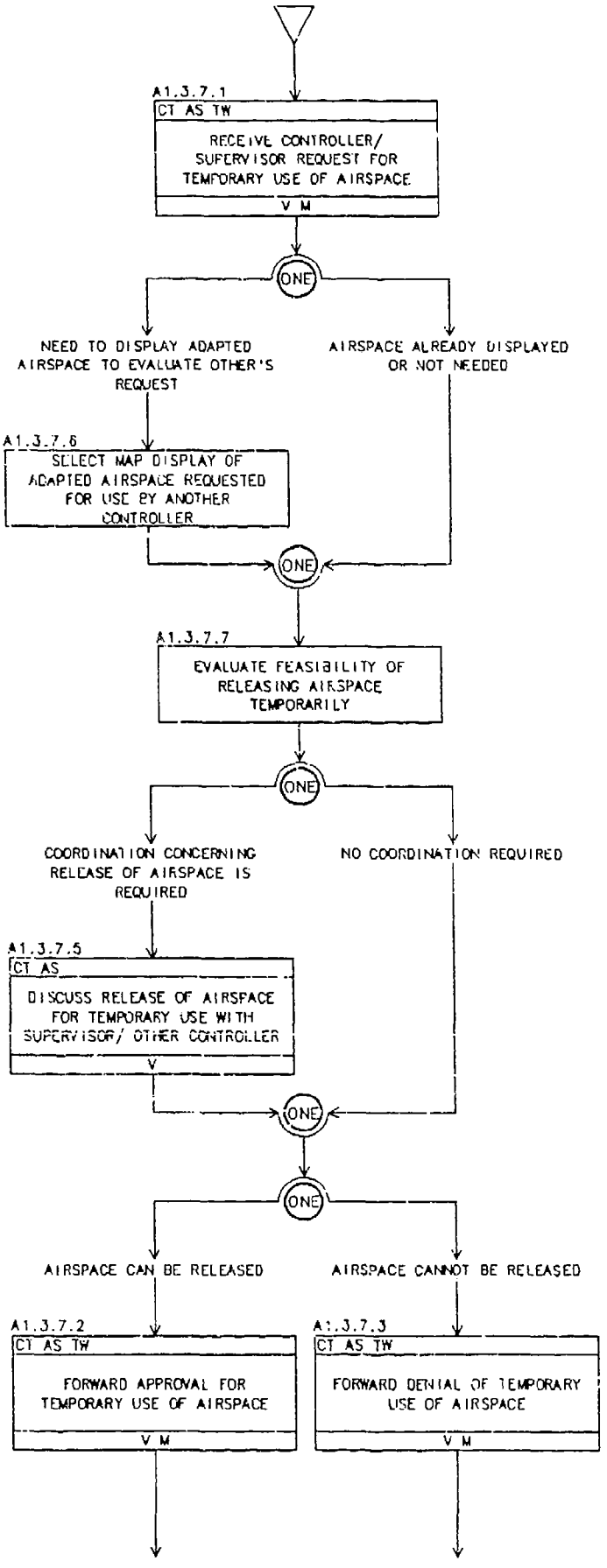

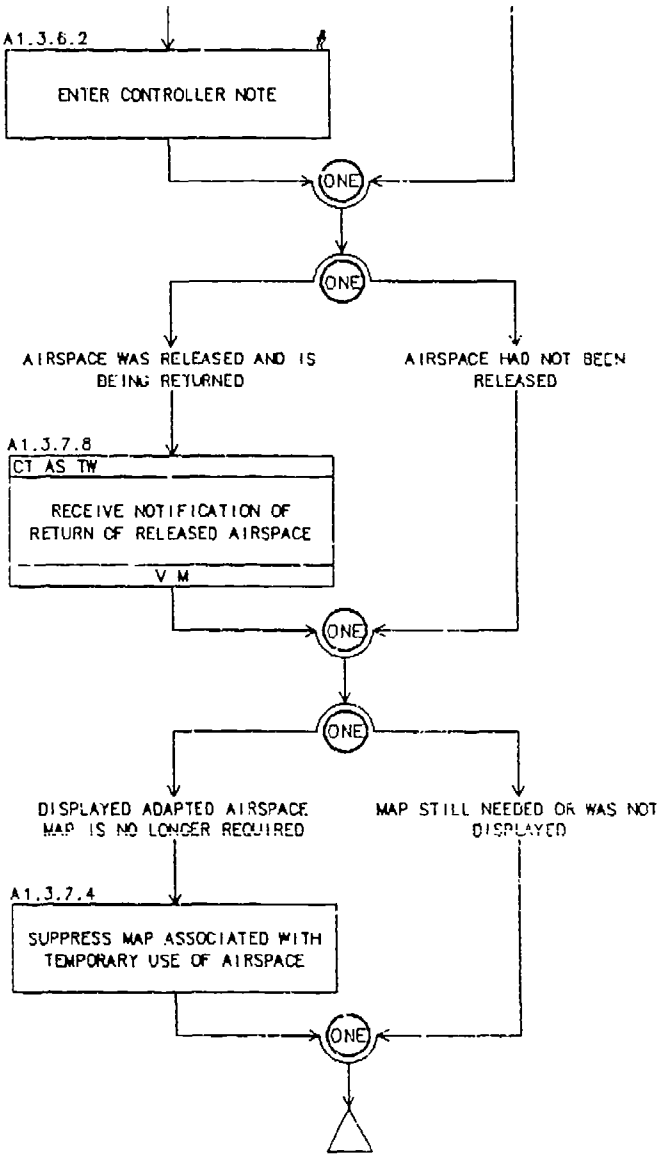
A1.3.6.2
ENTER CONTROLLER NOTE
ONE
ONE
AIRSPACE WAS RELEASED AND IS BEING RETURNED
AIRSPACE HAD NOT BEEN RELEASED
A1.3.7.8
CT AS TW
RECEIVE NOTIFICATION OF RETURN OF RELEASED AIRSPACE
V M
ONE
ONE
DISPLAYED ADAPTED AIRSPACE MAP IS NO LONGER REQUIRED
MAP STILL NEEDED OR WAS NOT DISPLAYED
A1.3.7.4
SUPPRESS MAP ASSOCIATED WITH TEMPORARY USE OF AIRSPACE
ONE

A1.3.8 REQUESTING TEMPORARY RELEASE OF AIRSPACE

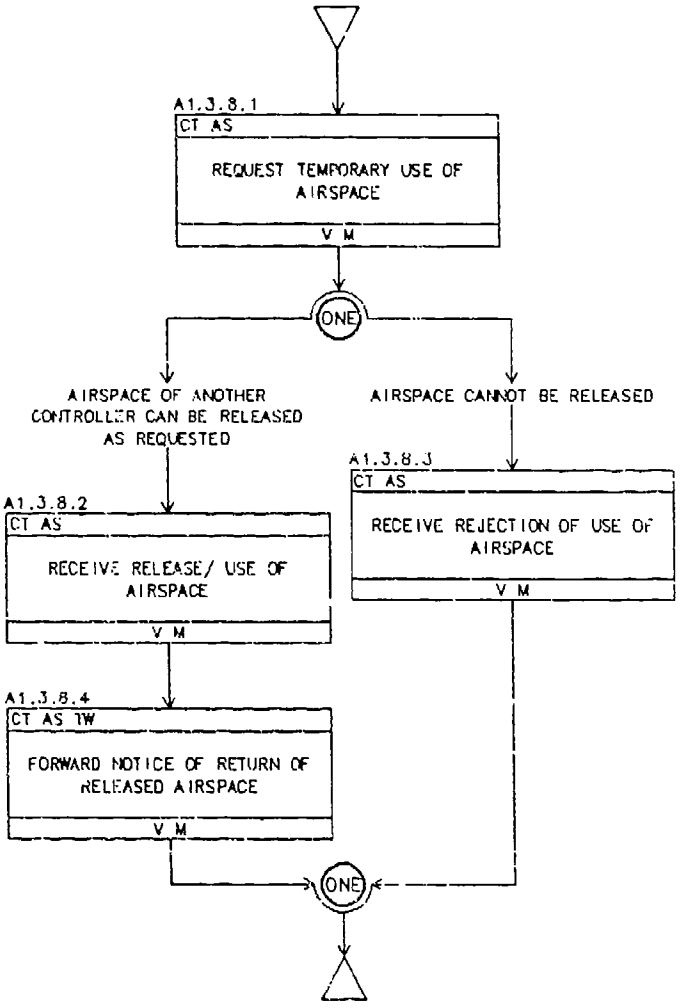

A1.4 ROUTE OR PLAN FLIGHTS

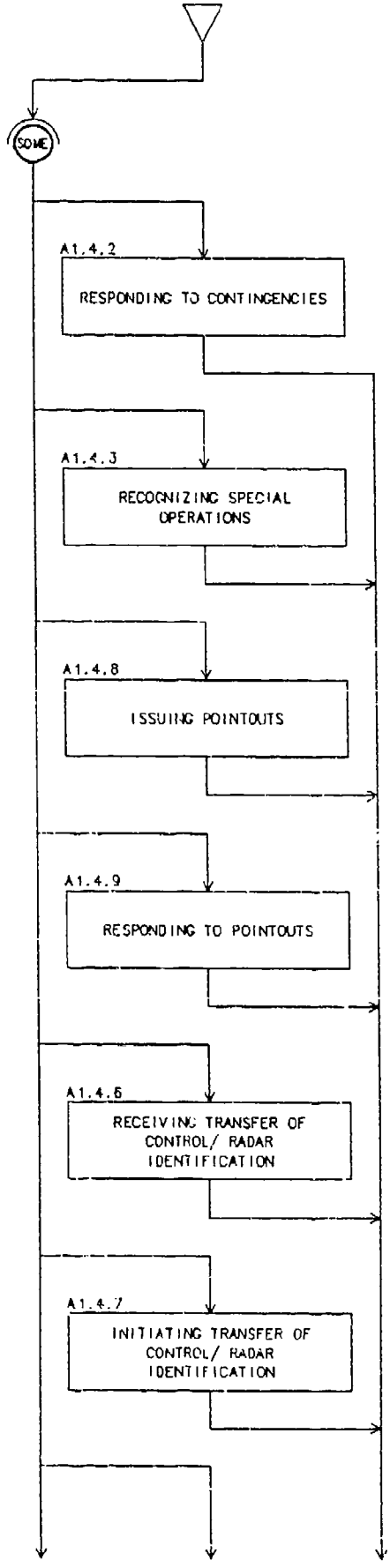

A1.4 ROUTE OR PLAN FLIGHTS (cont.)

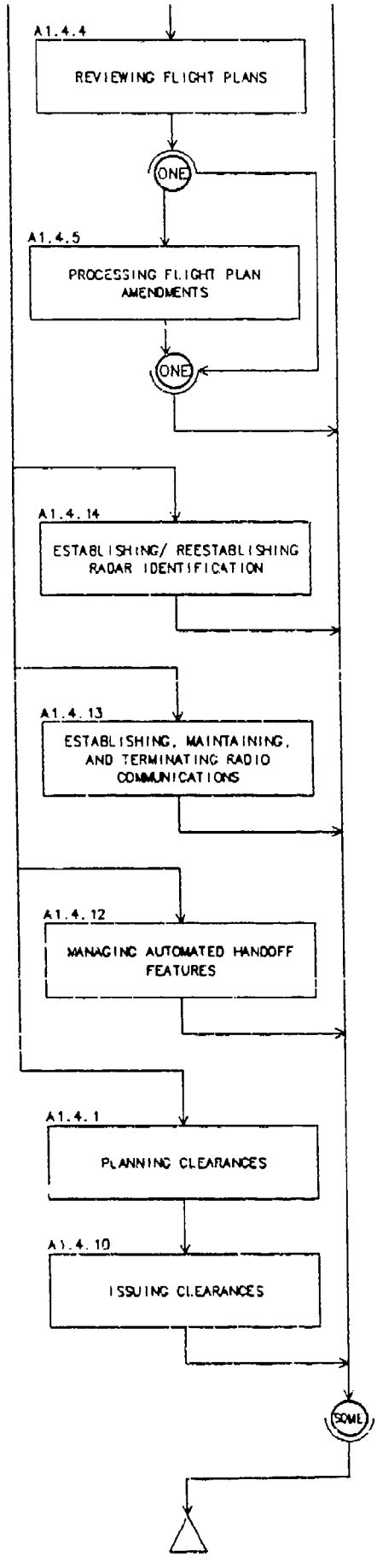

A1.4.1 PLANNING CLEARANCES

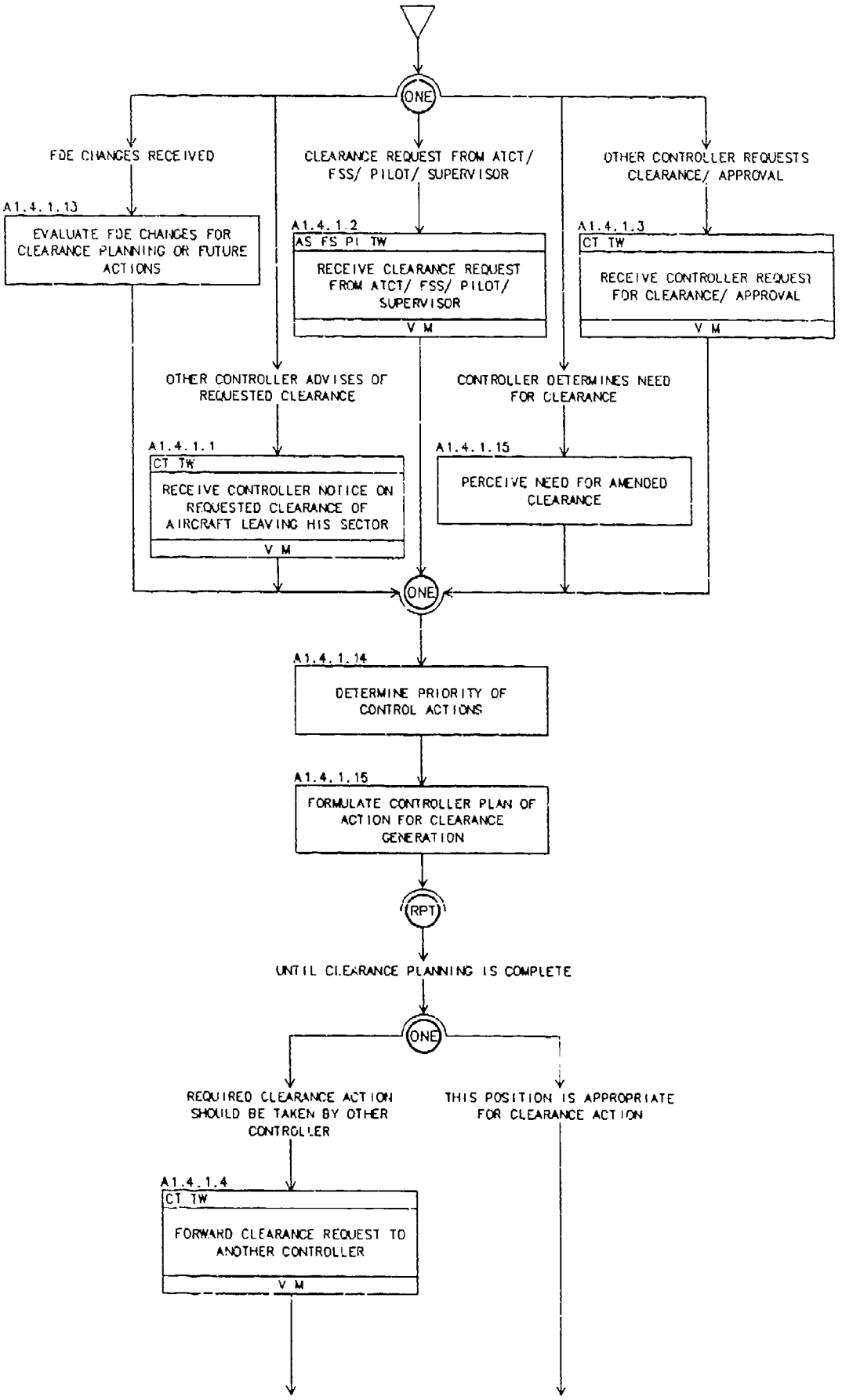

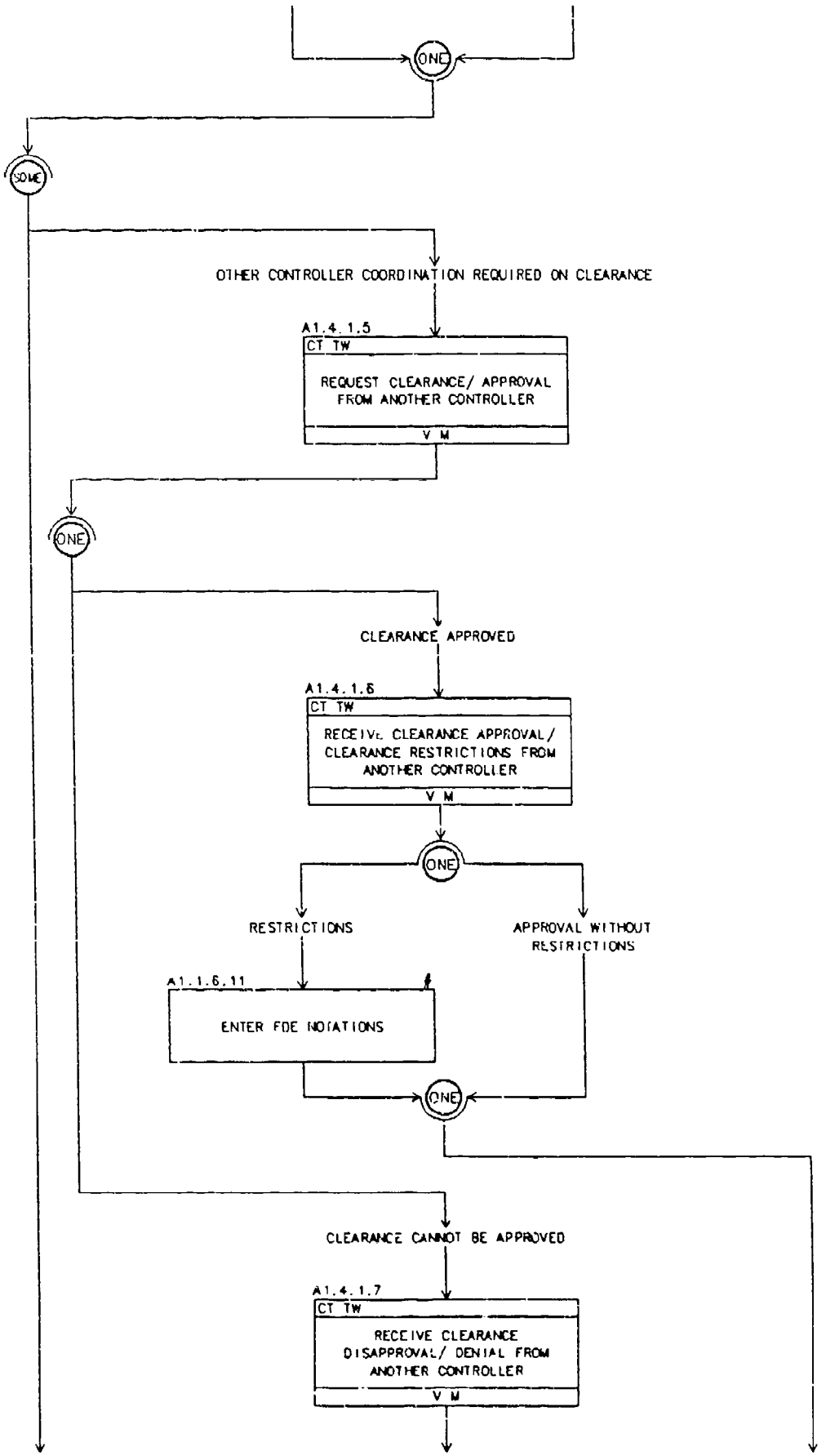
ONE
SOME
OTHER CONTROLLER COORDINATION REQUIRED ON CLEARANCE
A1.4.1.5
CT TW
REQUEST CLEARANCE/ APPROVAL FROM ANOTHER CONTROLLER
V M
ONE
CLEARANCE APPROVED
A1.4.1.6
CT TW
RECEIVE CLEARANCE APPROVAL/ CLEARANCE RESTRICTIONS FROM ANOTHER CONTROLLER
V M
ONE
RESTRICTIONS
APPROVAL WITHOUT RESTRICTIONS
A1.1.6.11
ENTER FDE NOTATIONS
ONE
CLEARANCE CANNOT BE APPROVED
A1.4.1.7
CT TW
RECEIVE CLEARANCE DISAPPROVAL/ DENIAL FROM ANOTHER CONTROLLER
V M

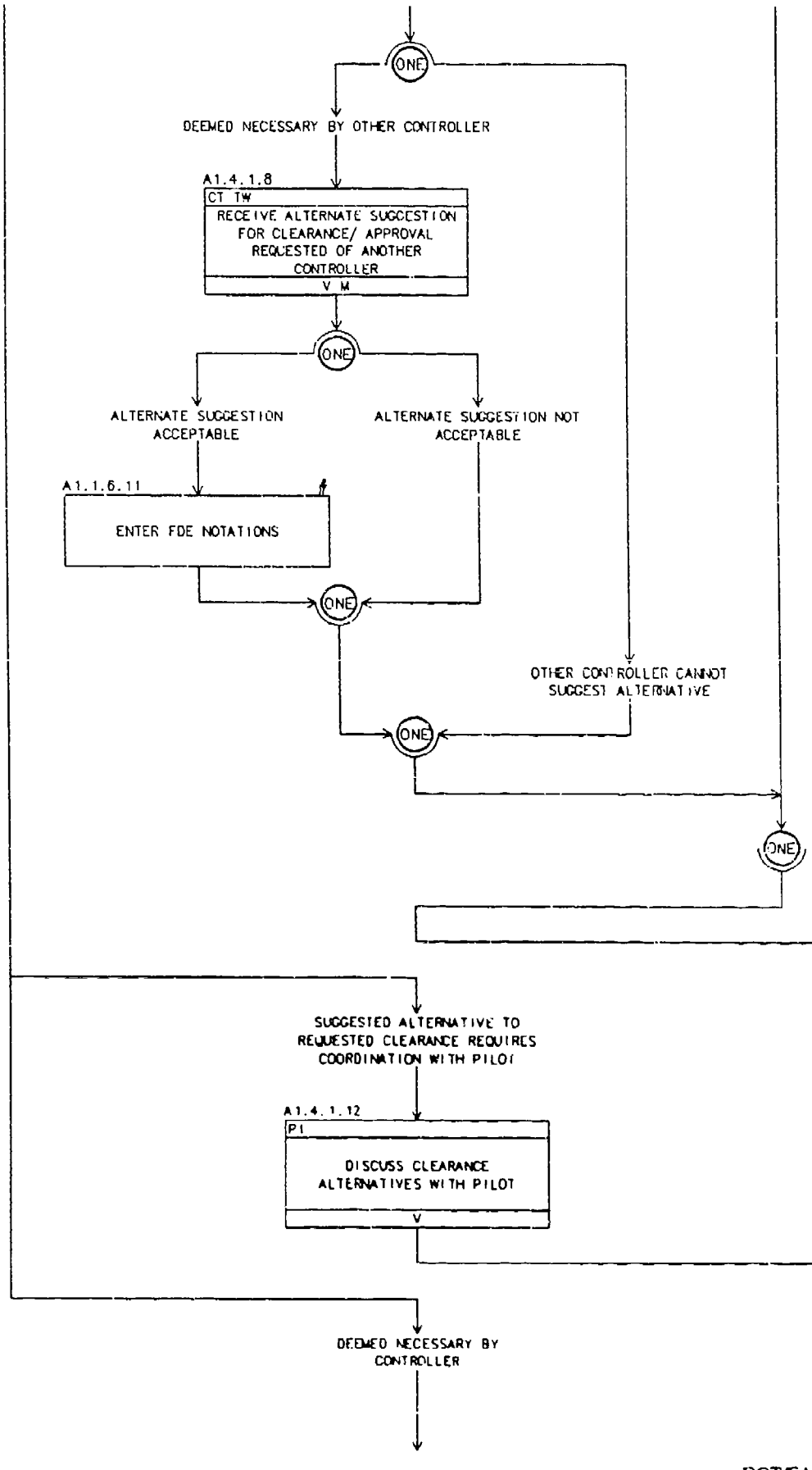
ONE
DEEMED NECESSARY BY OTHER CONTROLLER
A1.4.1.8
CT TW
RECEIVE ALTERNATE SUGGESTION FOR CLEARANCE/ APPROVAL REQUESTED OF ANOTHER CONTROLLER
V M
ONE
ALTERNATE SUGGESTION ACCEPTABLE
ALTERNATE SUGGESTION NOT ACCEPTABLE
A1.1.6.11
ENTER FDE NOTATIONS
ONE
OTHER CONTROLLER CANNOT SUGGEST ALTERNATIVE
ONE
ONE
SUGGESTED ALTERNATIVE TO REQUESTED CLEARANCE REQUIRES COORDINATION WITH PILOT
A1.4.1.12
P1
DISCUSS CLEARANCE ALTERNATIVES WITH PILOT
V
DEEMED NECESSARY BY CONTROLLER

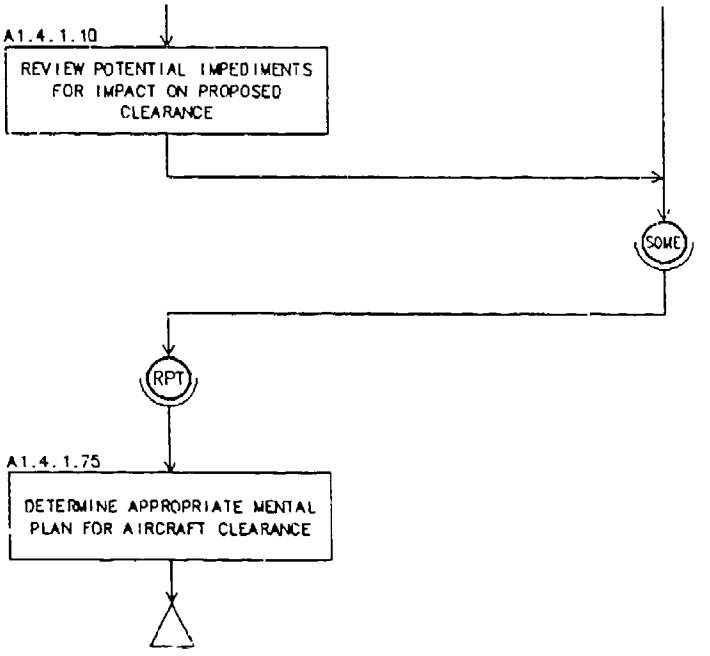
A1.4.1.10
REVIEW POTENTIAL IMPEDIMENTS FOR IMPACT ON PROPOSED CLEARANCE
SOME
RPT
A1.4.1.75
DETERMINE APPROPRIATE MENTAL PLAN FOR AIRCRAFT CLEARANCE

A1.4.2 RESPONDING TO CONTINGENCIES

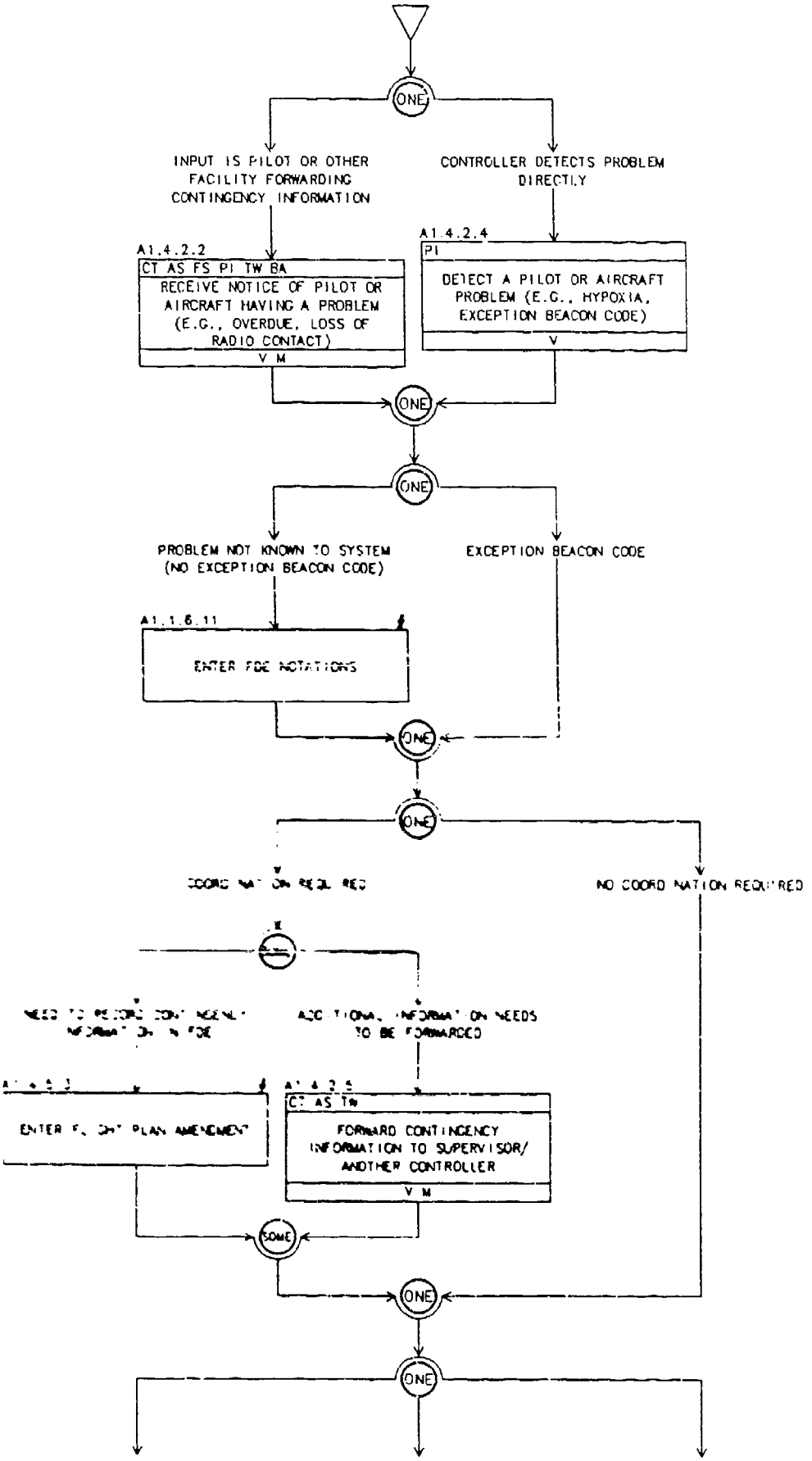

A1.4.2 RESPONDING TO CONTINGENCIES (cont.)

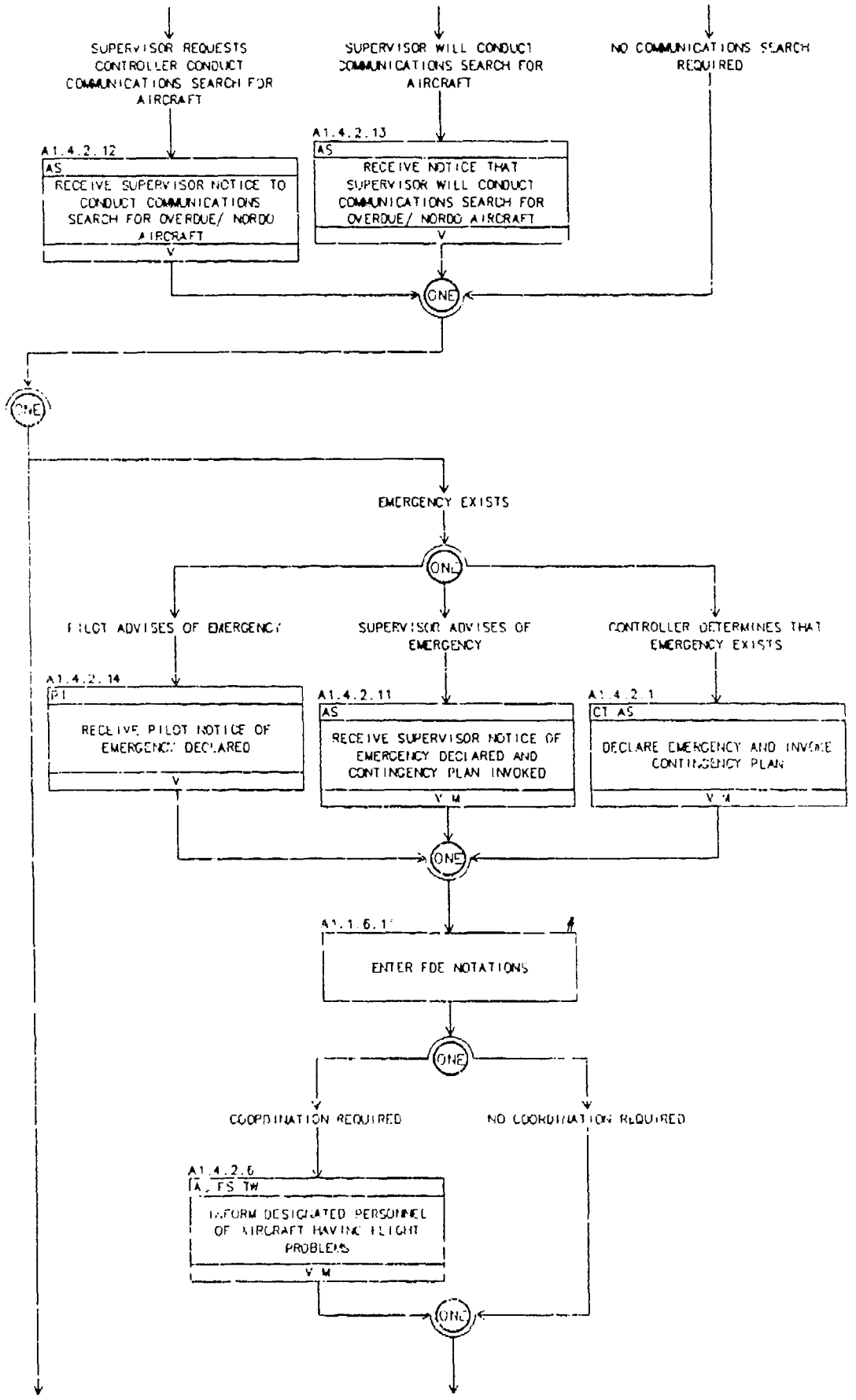

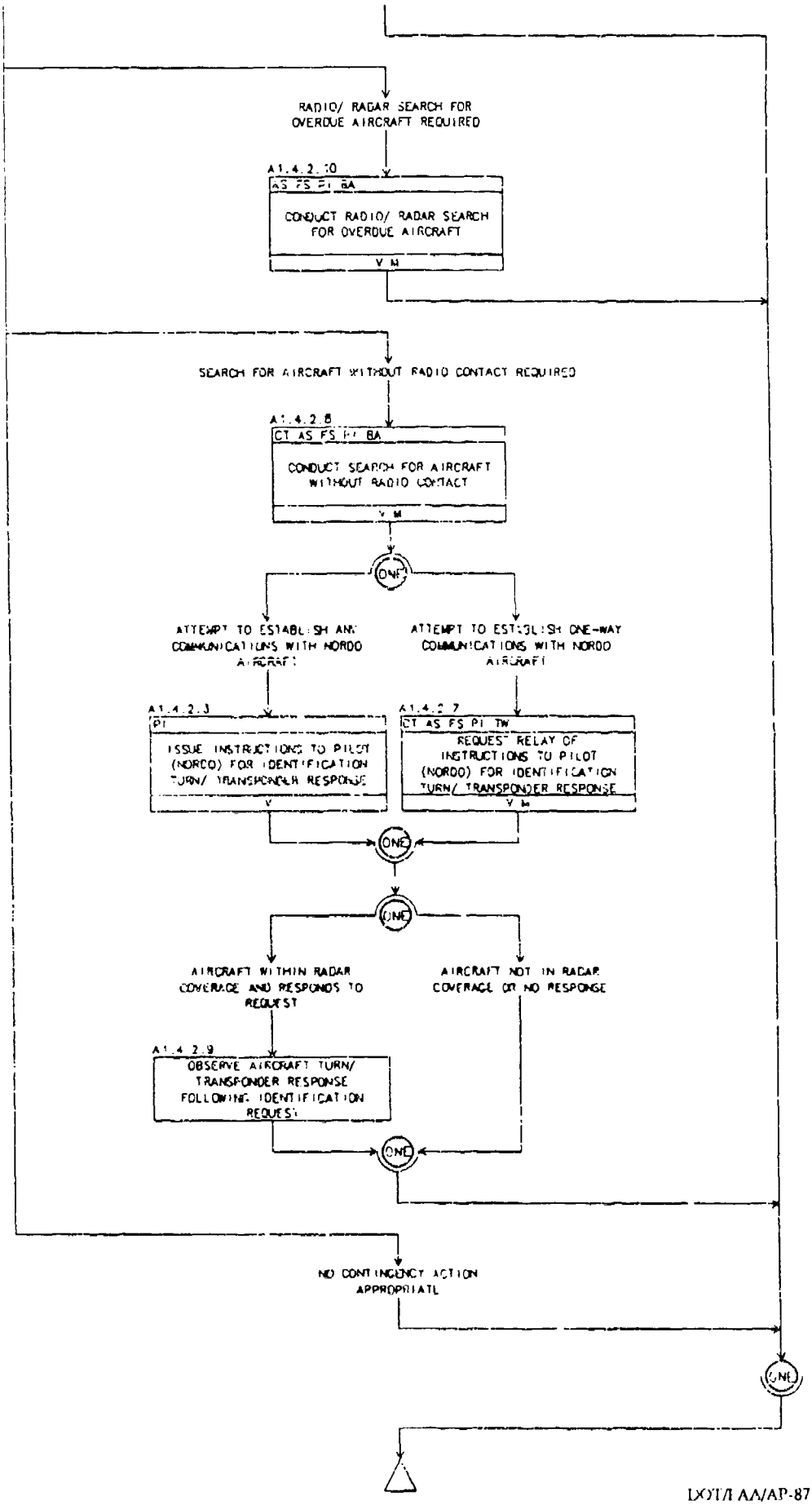
RADIO/ RADAR SEARCH FOR OVERDUE AIRCRAFT REQUIRED
A1.4.2.10
AS FS PI BA
CONDUCT RADIO/ RADAR SEARCH FOR OVERDUE AIRCRAFT
V M
SEARCH FOR AIRCRAFT WITHOUT RADIO CONTACT REQUIRED
A1.4.2.8
CT AS FS PI BA
CONDUCT SEARCH FOR AIRCRAFT WITHOUT RADIO CONTACT
V M
ONE
ATTEMPT TO ESTABLISH ANY COMMUNICATIONS WITH NORDO AIRCRAFT
ATTEMPT TO ESTABLISH ONE-WAY COMMUNICATIONS WITH NORDO AIRCRAFT
A1.4.2.3
PI
ISSUE INSTRUCTIONS TO PILOT (NORDO) FOR IDENTIFICATION TURN/ TRANSPONDER RESPONSE
V
A1.4.2.7
CT AS FS PI TW
REQUEST RELAY OF INSTRUCTIONS TO PILOT (NORDO) FOR IDENTIFICATION TURN/ TRANSPONDER RESPONSE
V M
ONE
ONE
AIRCRAFT WITHIN RADAR COVERAGE AND RESPONDS TO REQUEST
AIRCRAFT NOT IN RADAR COVERAGE OR NO RESPONSE
A1.4.2.9
OBSERVE AIRCRAFT TURN/ TRANSPONDER RESPONSE FOLLOWING IDENTIFICATION REQUEST
ONE
NO CONTINGENCY ACTION APPROPRIATE
ONE

A1.4.3 RECOGNIZING SPECIAL OPERATIONS

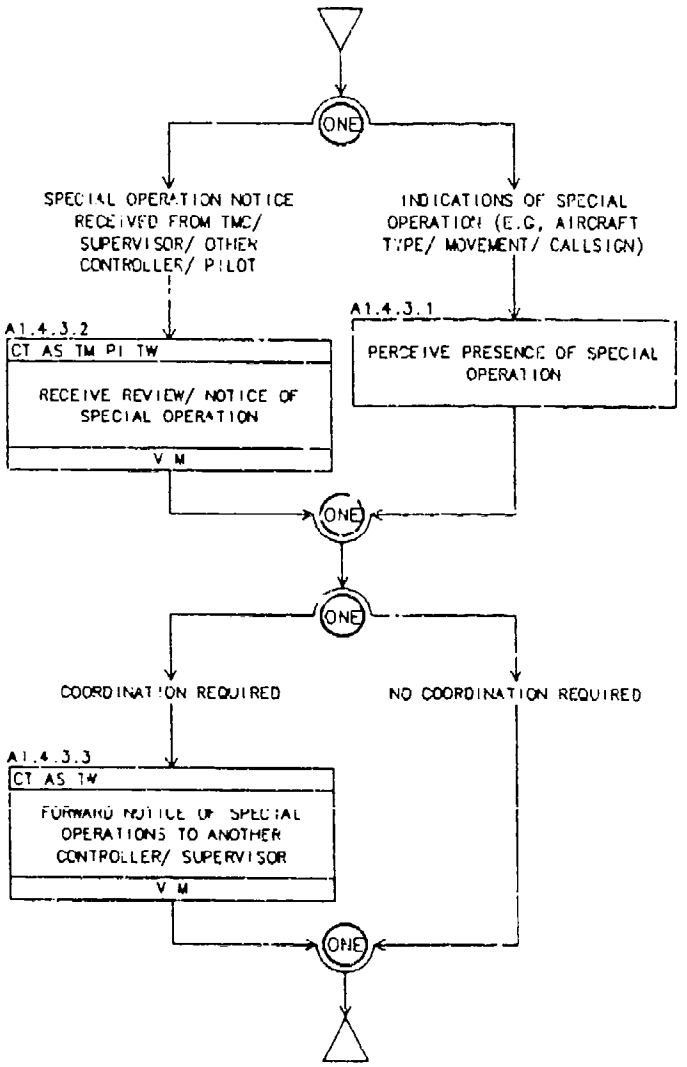

A1.4.4 REVIEWING FLIGHT PLANS

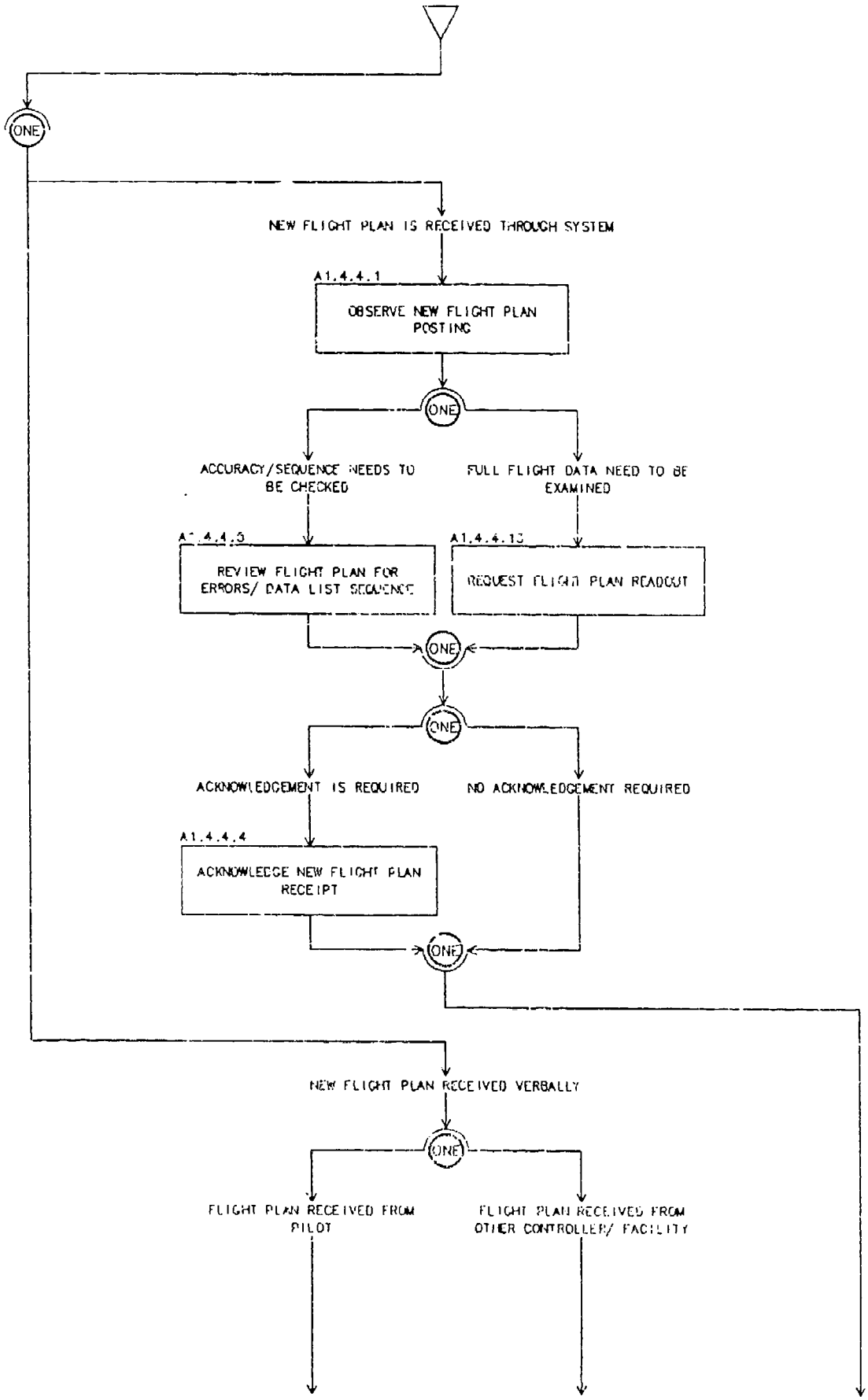

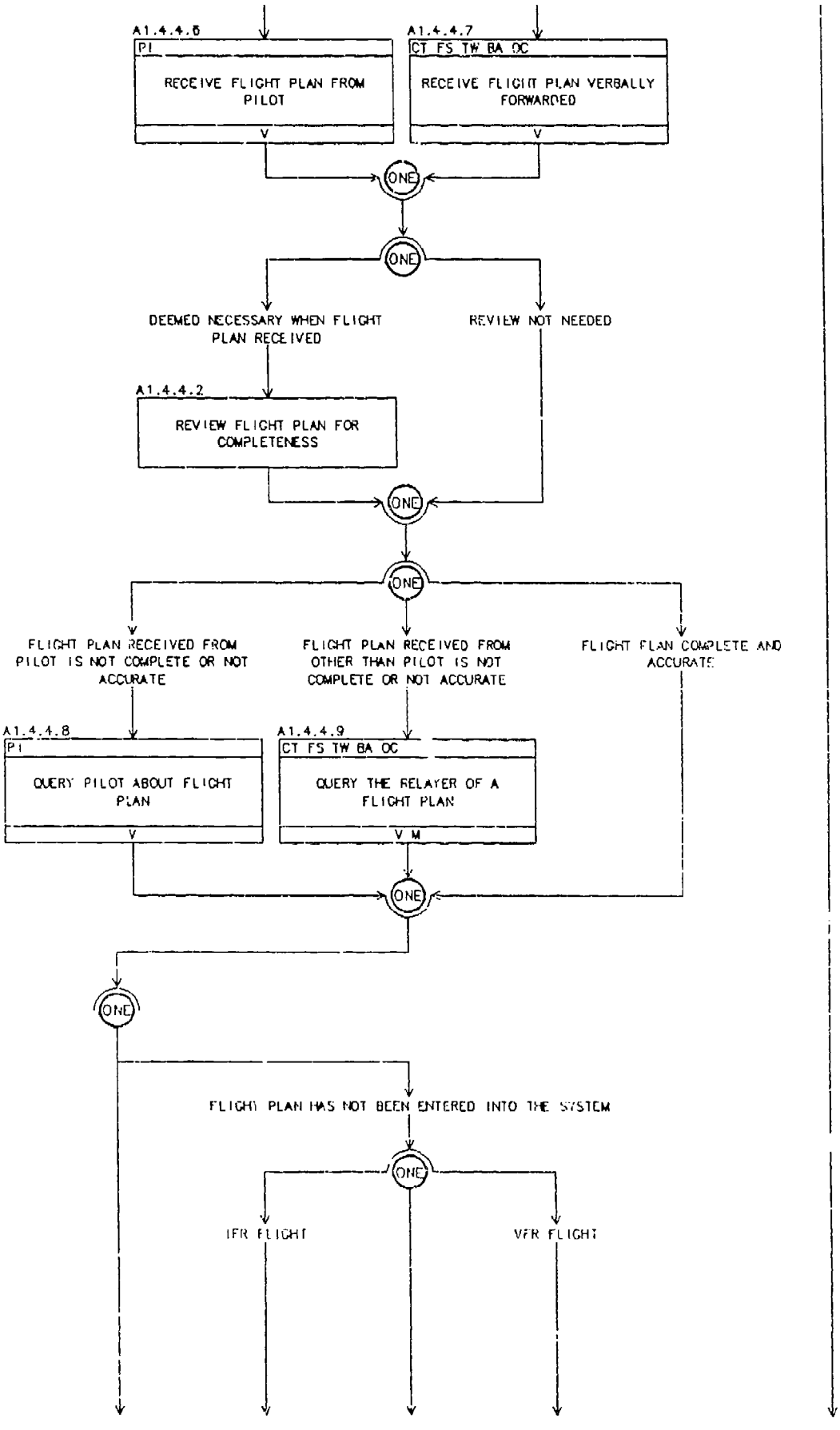
A1.4.4.6
PI
RECEIVE FLIGHT PLAN FROM PILOT
V
A1.4.4.7
CT FS TW BA OC
RECEIVE FLIGHT PLAN VERBALLY FORWARDED
V
ONE
ONE
DEEMED NECESSARY WHEN FLIGHT PLAN RECEIVED
REVIEW NOT NEEDED
A1.4.4.2
REVIEW FLIGHT PLAN FOR COMPLETENESS
ONE
ONE
FLIGHT PLAN RECEIVED FROM PILOT IS NOT COMPLETE OR NOT ACCURATE
FLIGHT PLAN RECEIVED FROM OTHER THAN PILOT IS NOT COMPLETE OR NOT ACCURATE
FLIGHT PLAN COMPLETE AND ACCURATE
A1.4.4.8
PI
QUERY PILOT ABOUT FLIGHT PLAN
V
A1.4.4.9
CT FS TW BA OC
QUERY THE RELAYER OF A FLIGHT PLAN
V M
ONE
ONE
FLIGHT PLAN HAS NOT BEEN ENTERED INTO THE SYSTEM
ONE
IFR FLIGHT
VFR FLIGHT

A1.4.4 REVIEWING FLIGHT PLANS (cont.)

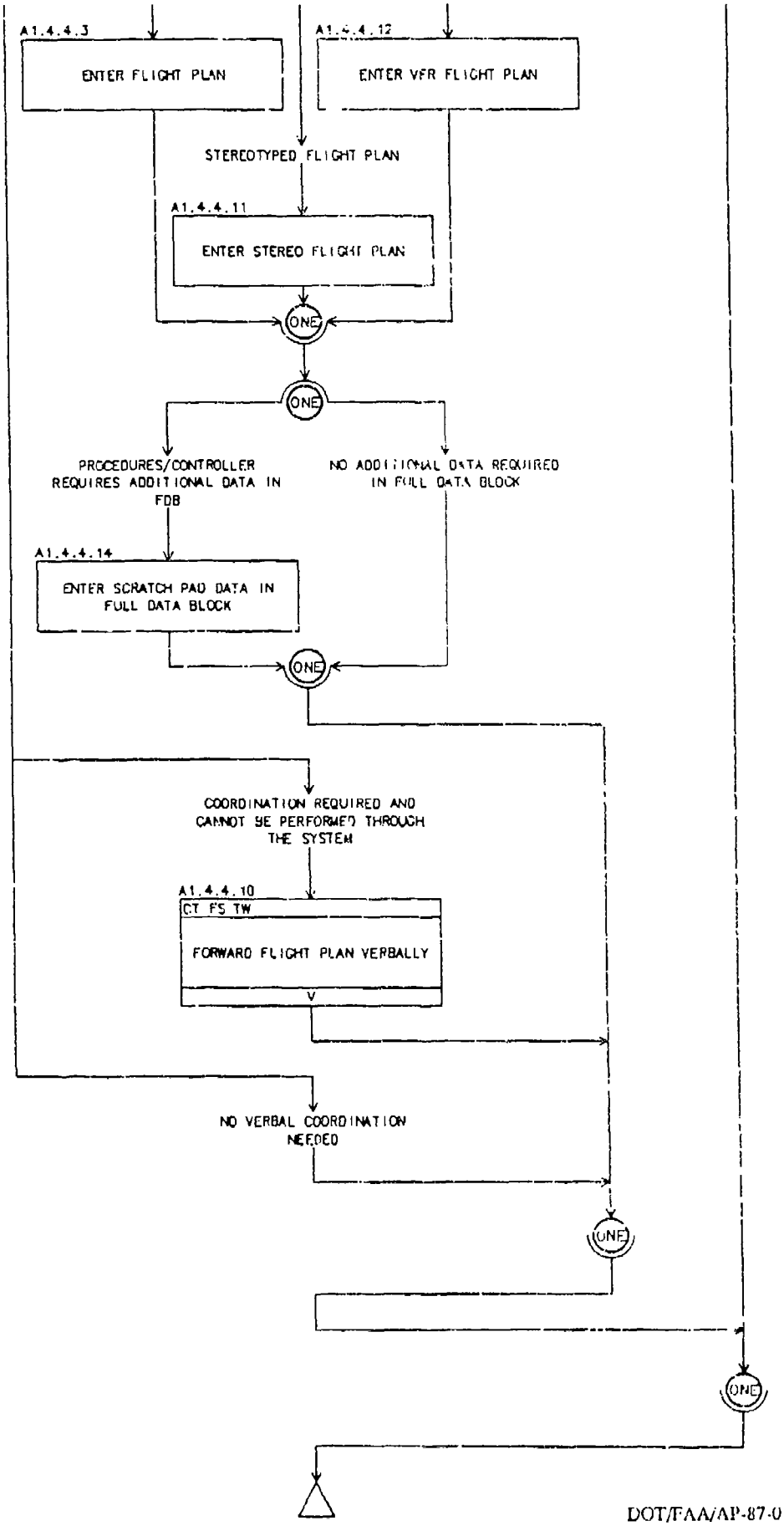

A1.4.5 PROCESSING FLIGHT PLAN AMENDMENTS

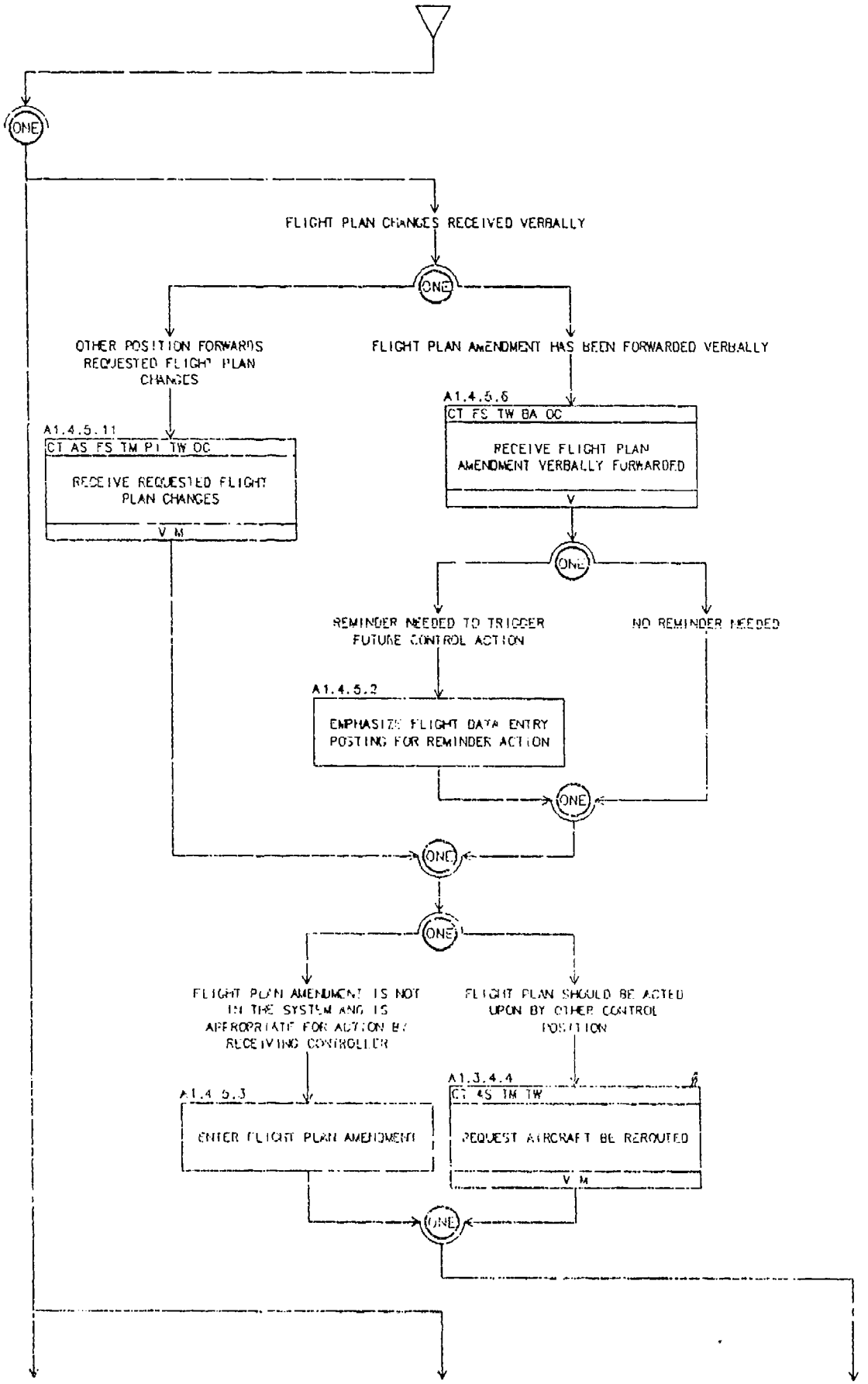

A1.4.5 PROCESSING FLIGHT PLAN AMENDMENTS (cont.)

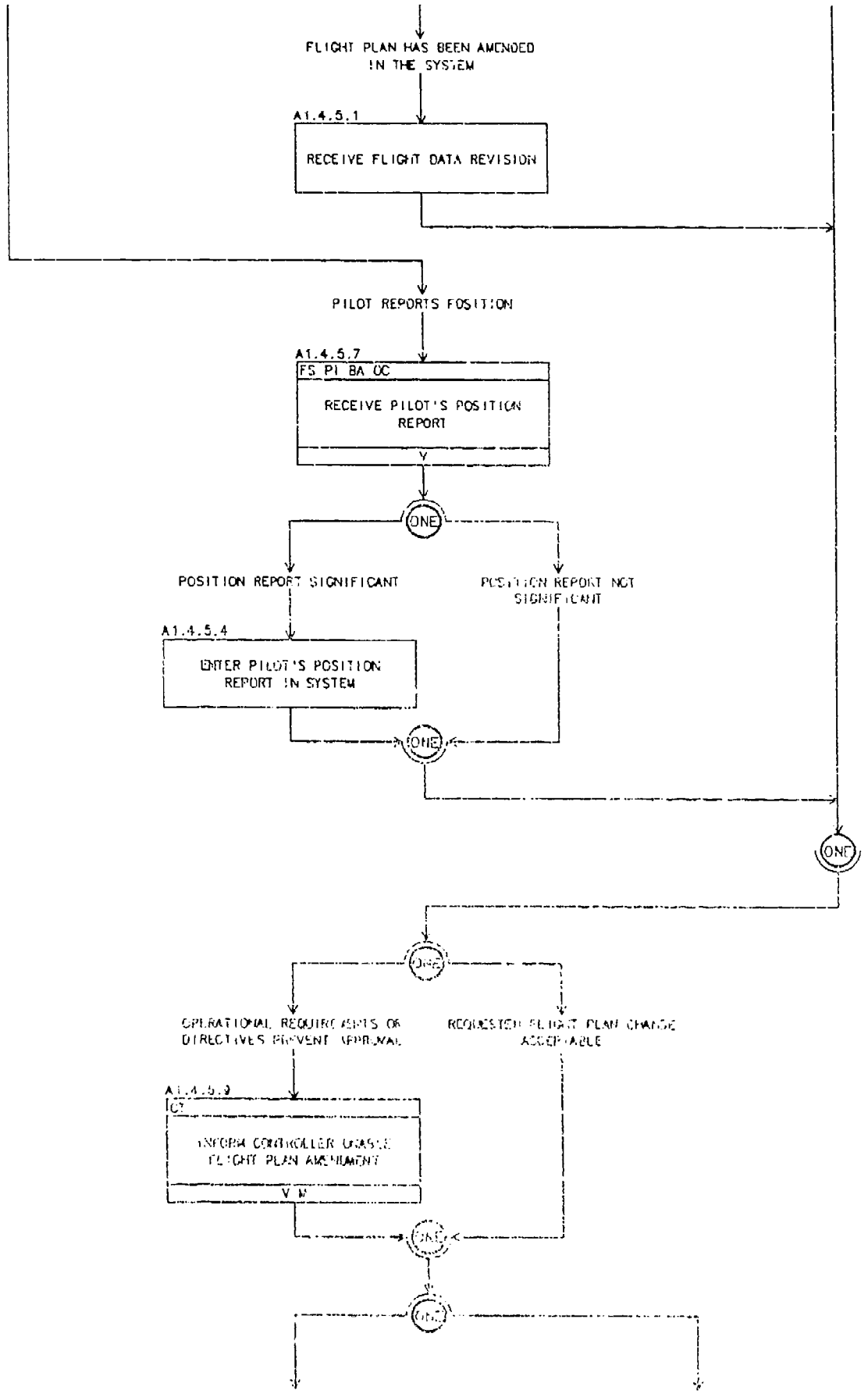

A1.4.5 PROCESSING FLIGHT PLAN AMENDMENTS (cont.)

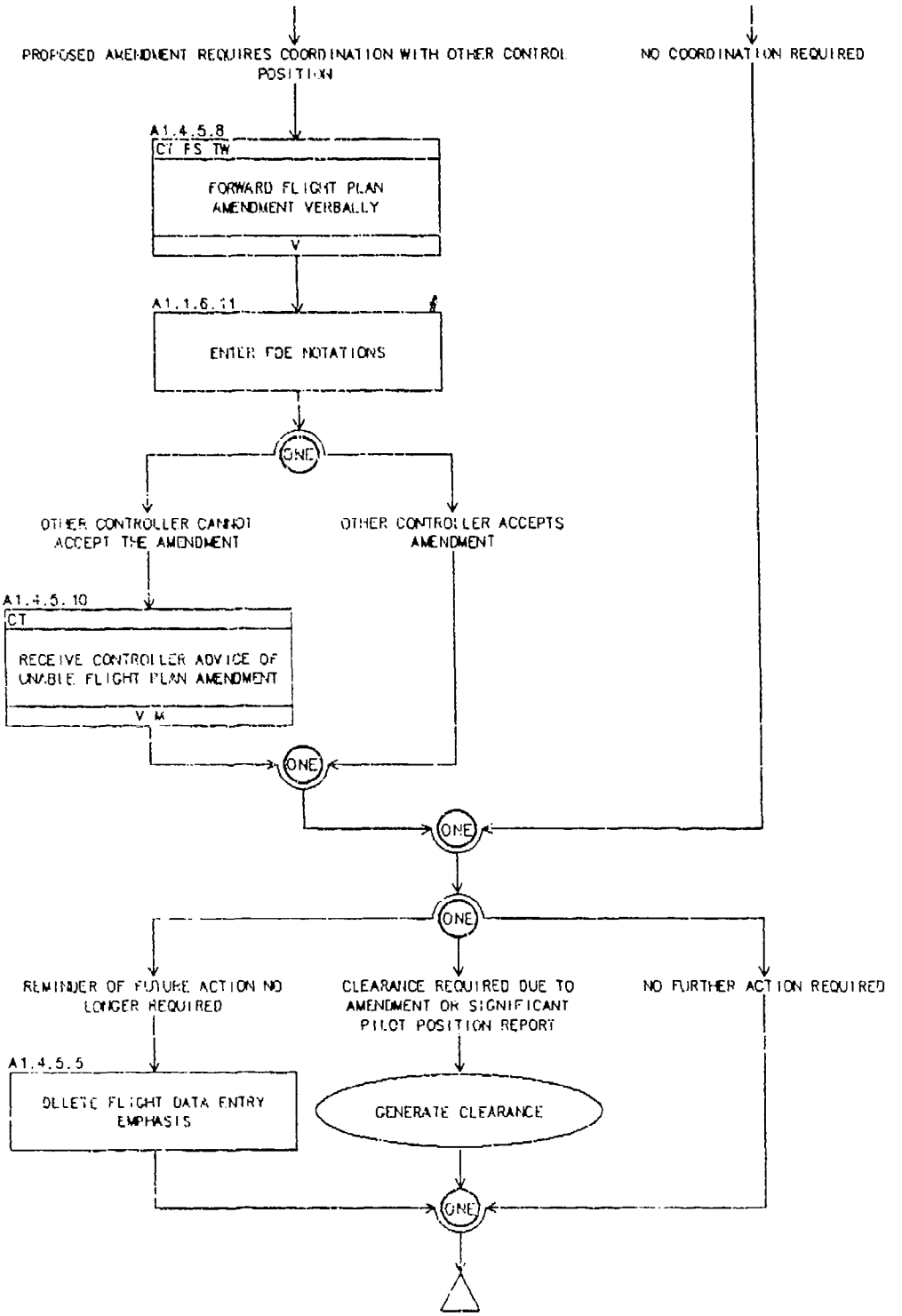

A1.4.6 RECEIVING TRANSFER OF CONTROL/ RADAR IDENTIFICATION

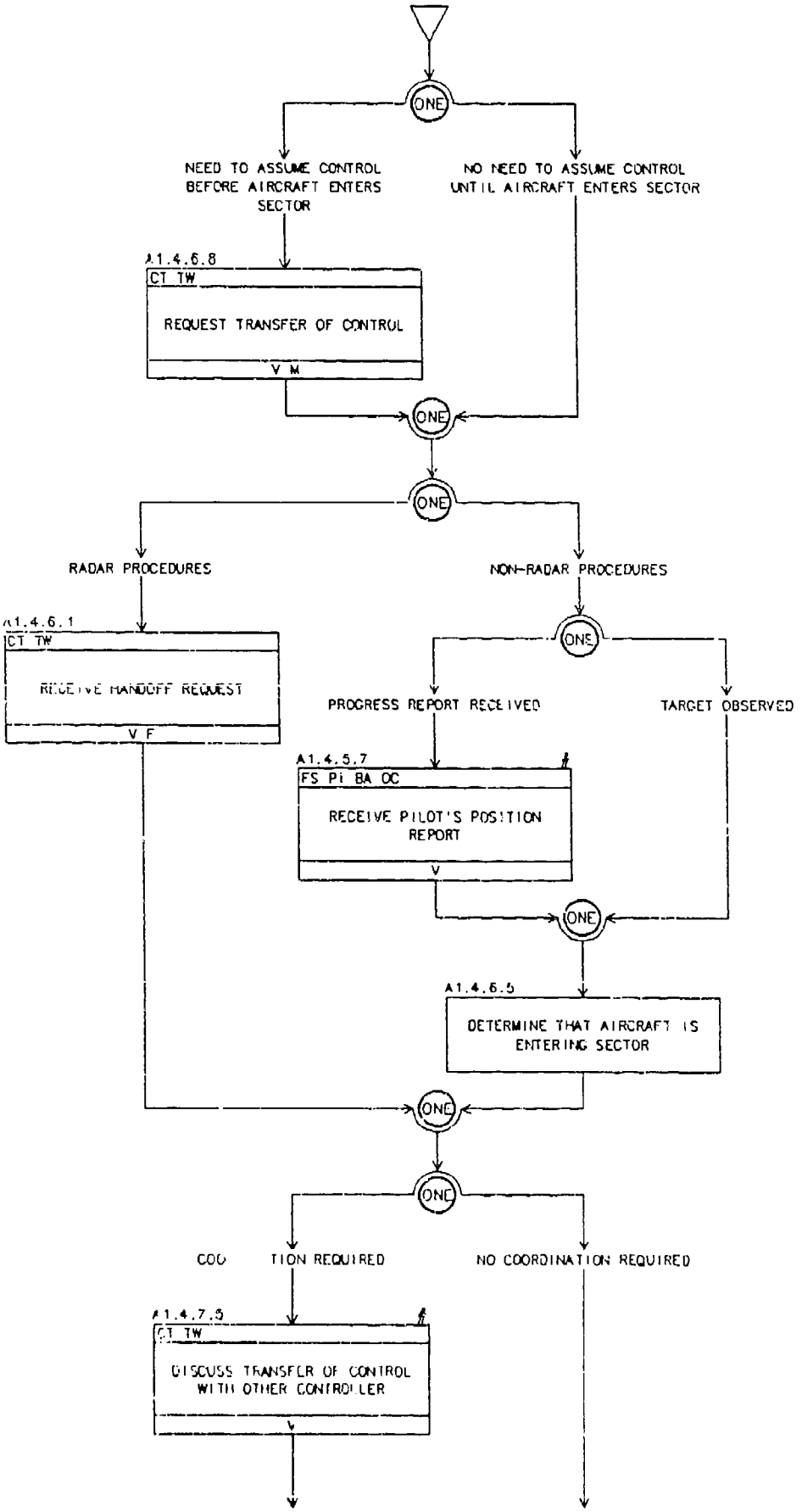

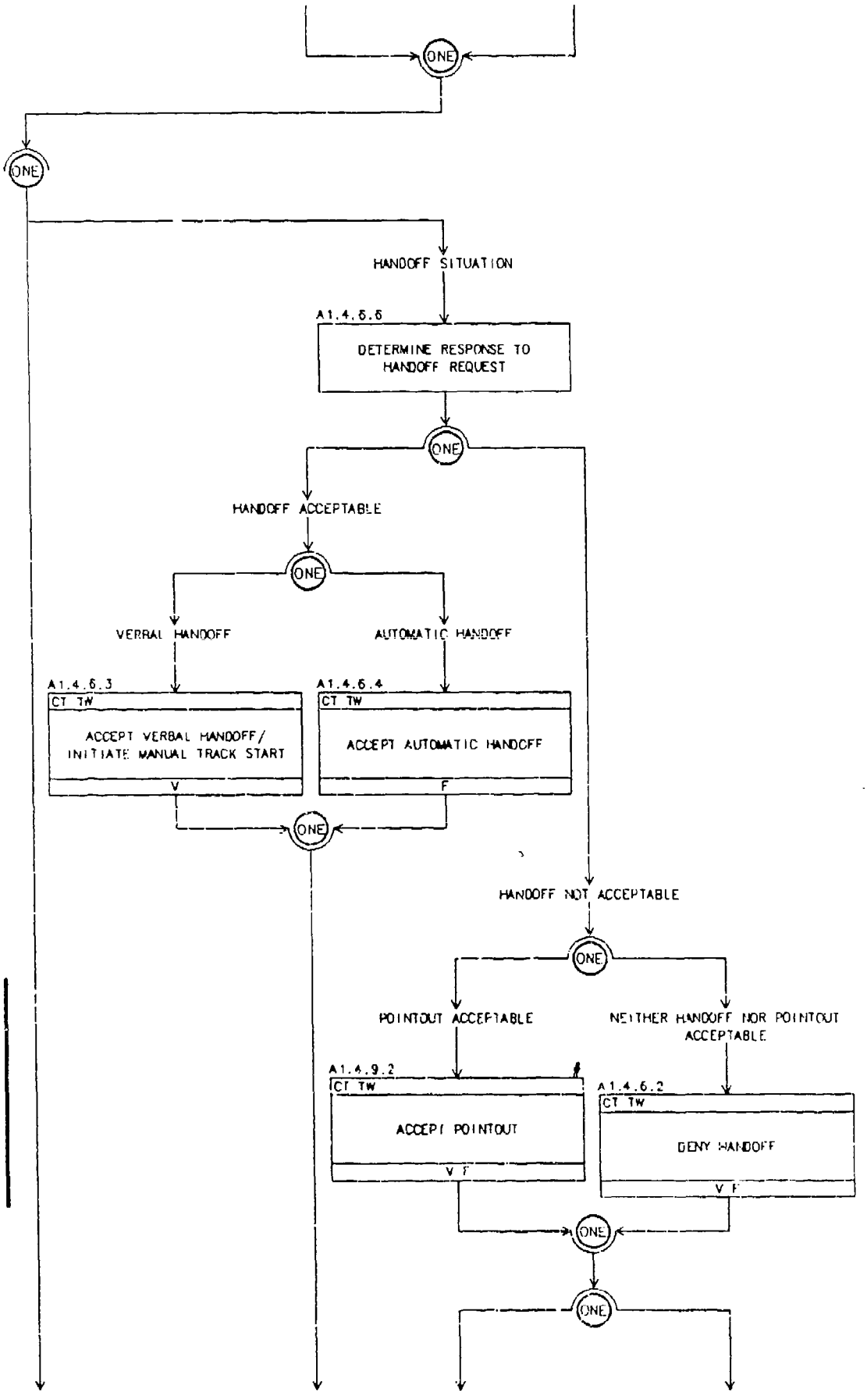
ONE
ONE
HANDOFF SITUATION
A1.4.6.6
DETERMINE RESPONSE TO HANDOFF REQUEST
ONE
HANDOFF ACCEPTABLE
ONE
VERBAL HANDOFF
AUTOMATIC HANDOFF
A1.4.6.3
CT TW
ACCEPT VERBAL HANDOFF/ INITIATE MANUAL TRACK START
V
A1.4.6.4
CT TW
ACCEPT AUTOMATIC HANDOFF
F
ONE
HANDOFF NOT ACCEPTABLE
ONE
POINTOUT ACCEPTABLE
NEITHER HANDOFF NOR POINTOUT ACCEPTABLE
A1.4.9.2
CT TW
ACCEPT POINTOUT
V F
A1.4.6.2
CT TW
DENY HANDOFF
V F
ONE
ONE

A1.4.6 RECEIVING TRANSFER OF CONTROL/ RADAR IDENTIFICATION (cont.)

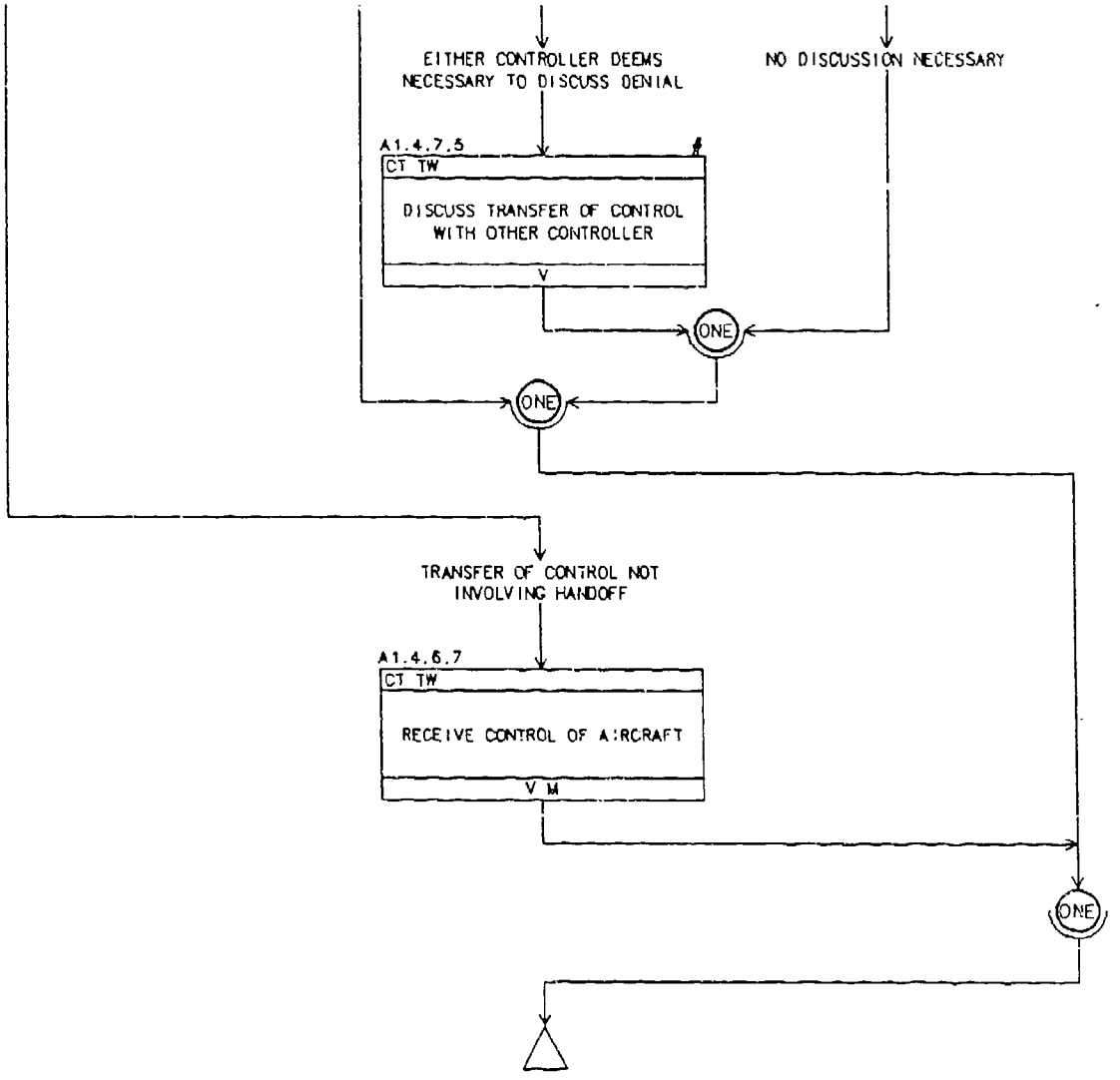

A1 4.7 INITIATING TRANSFER OF CONTROL/ RADAR IDENTIFICATION

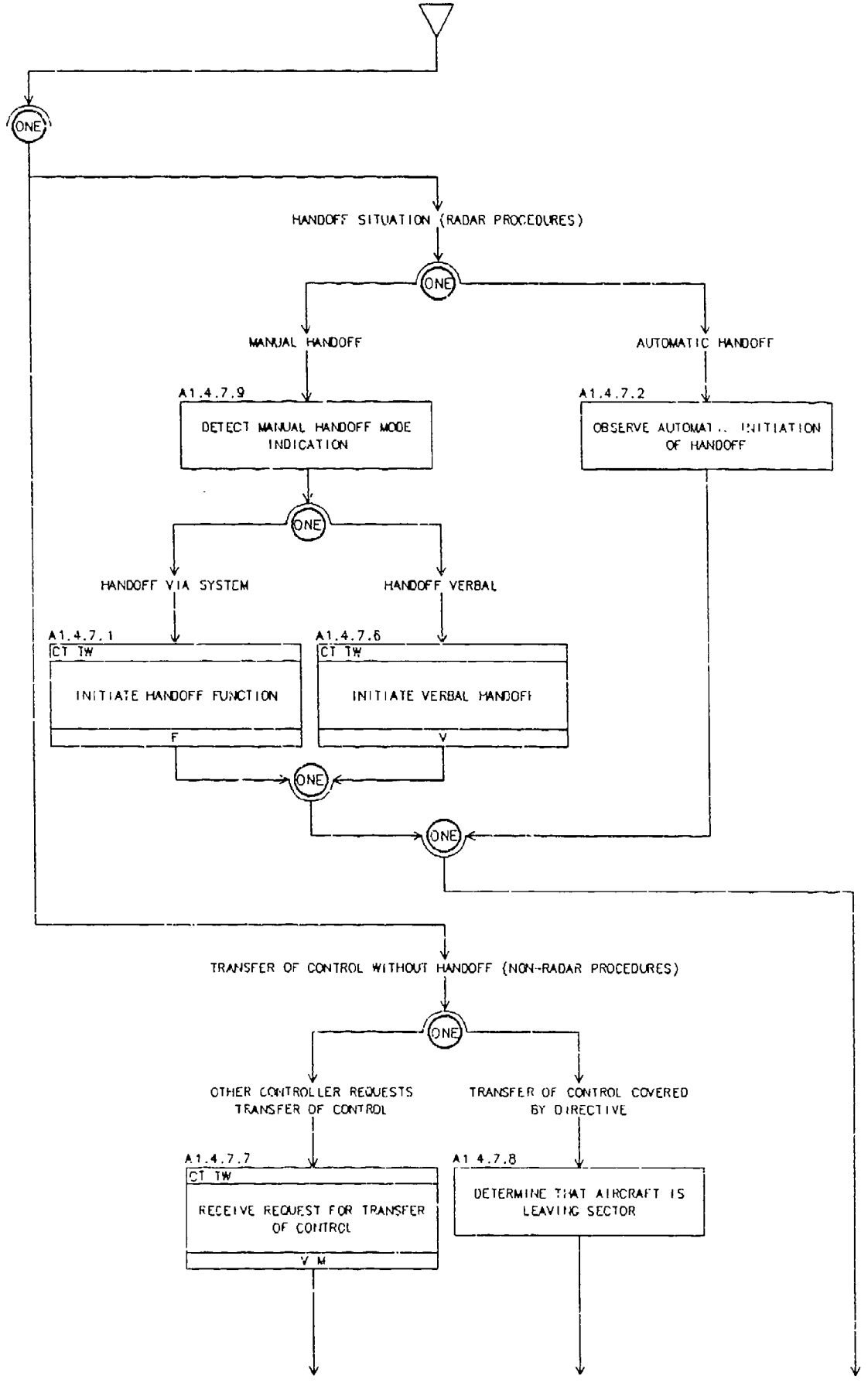

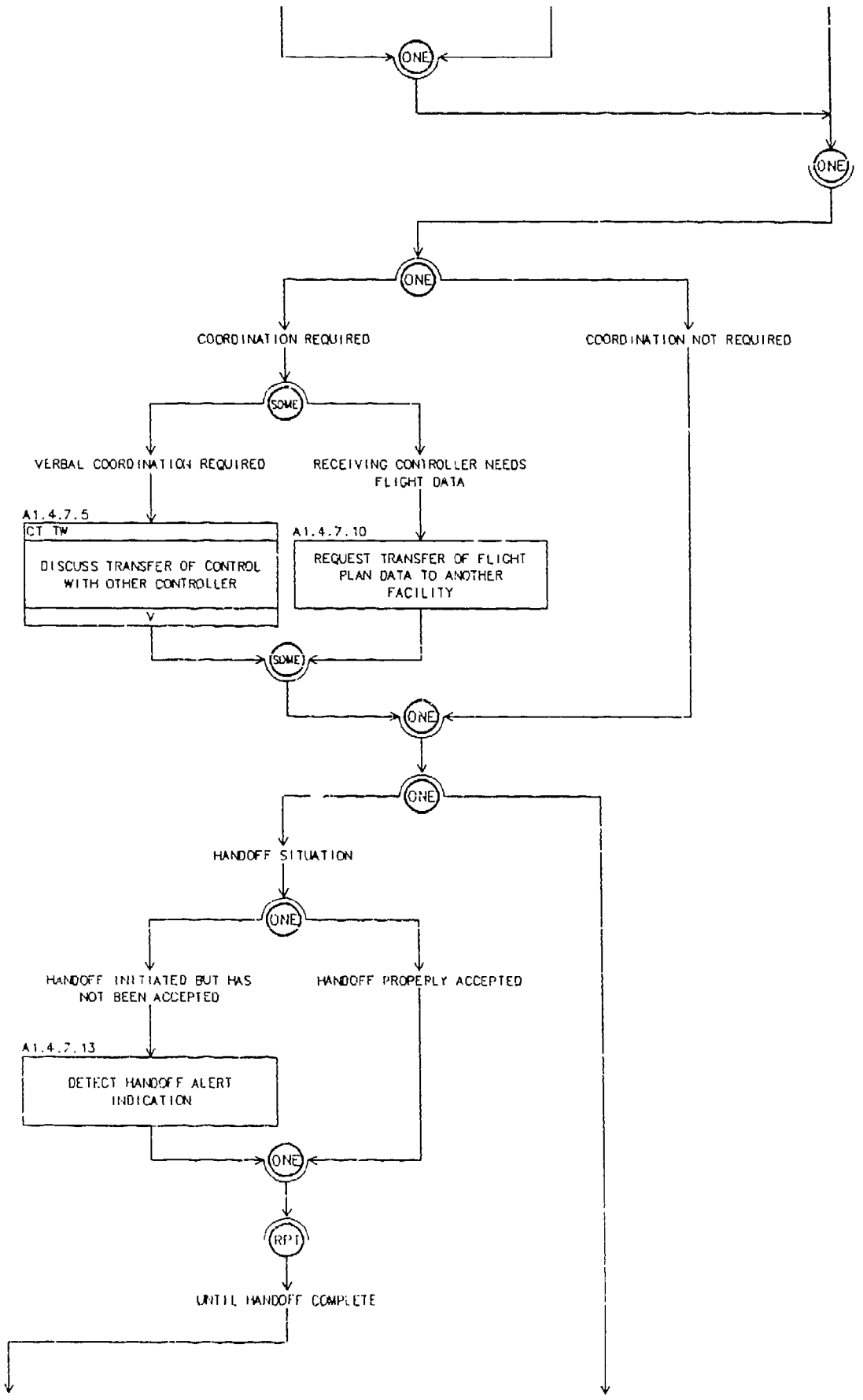
ONE
ONE
ONE
COORDINATION REQUIRED
COORDINATION NOT REQUIRED
SOME
VERBAL COORDINATION REQUIRED
RECEIVING CONTROLLER NEEDS FLIGHT DATA
A1.4.7.5
CT TW
DISCUSS TRANSFER OF CONTROL WITH OTHER CONTROLLER
A1.4.7.10
REQUEST TRANSFER OF FLIGHT PLAN DATA TO ANOTHER FACILITY
SOME
ONE
ONE
HANDOFF SITUATION
ONE
HANDOFF INITIATED BUT HAS NOT BEEN ACCEPTED
HANDOFF PROPERLY ACCEPTED
A1.4.7.13
DETECT HANDOFF ALERT INDICATION
ONE
RPT
UNTIL HANDOFF COMPLETE

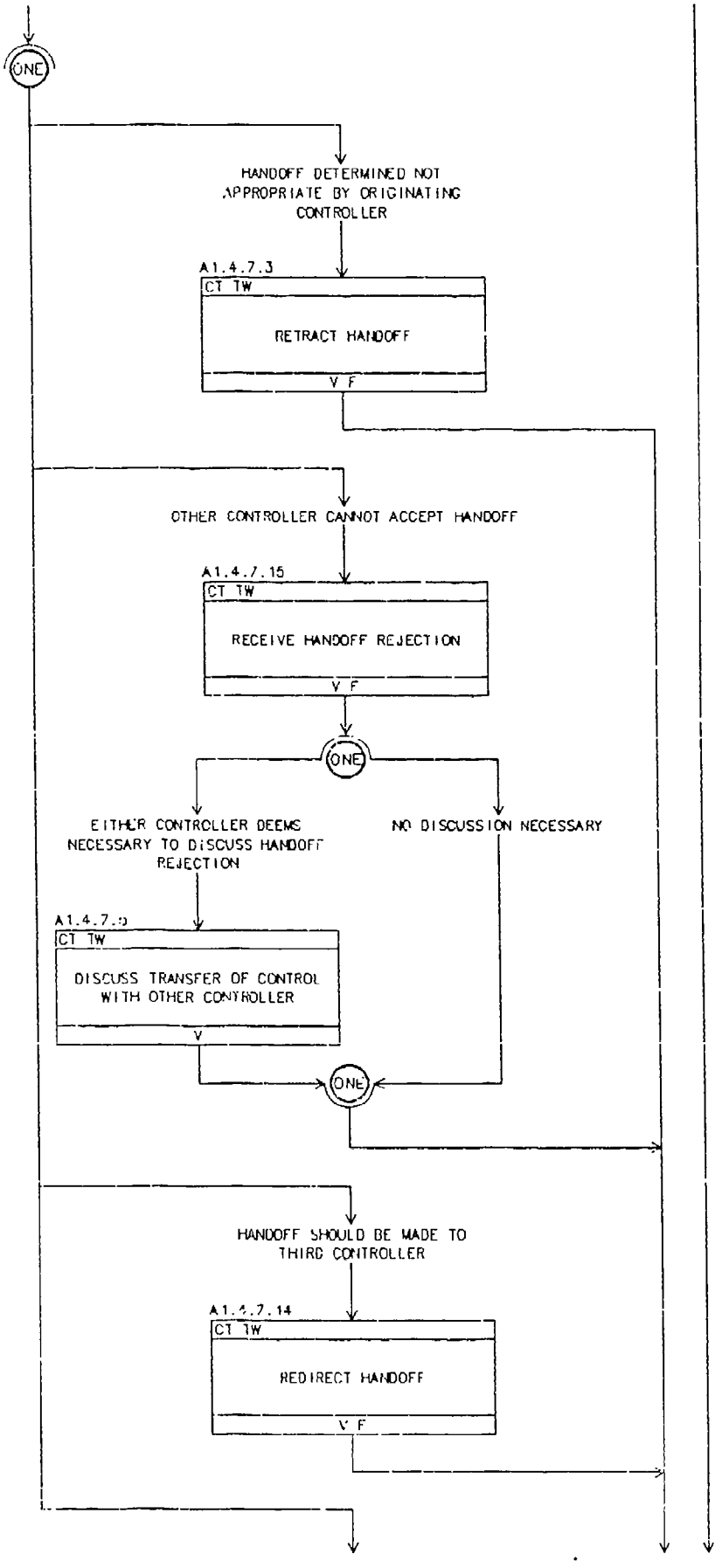
ONE
HANDOFF DETERMINED NOT APPROPRIATE BY ORIGINATING CONTROLLER
A1.4.7.3
CT TW
RETRACT HANDOFF
V F
OTHER CONTROLLER CANNOT ACCEPT HANDOFF
A1.4.7.15
CT TW
RECEIVE HANDOFF REJECTION
V F
ONE
EITHER CONTROLLER DEEMS NECESSARY TO DISCUSS HANDOFF REJECTION
NO DISCUSSION NECESSARY
A1.4.7.5
CT TW
DISCUSS TRANSFER OF CONTROL WITH OTHER CONTROLLER
V
ONE
HANDOFF SHOULD BE MADE TO THIRD CONTROLLER
A1.4.7.14
CT TW
REDIRECT HANDOFF
V F

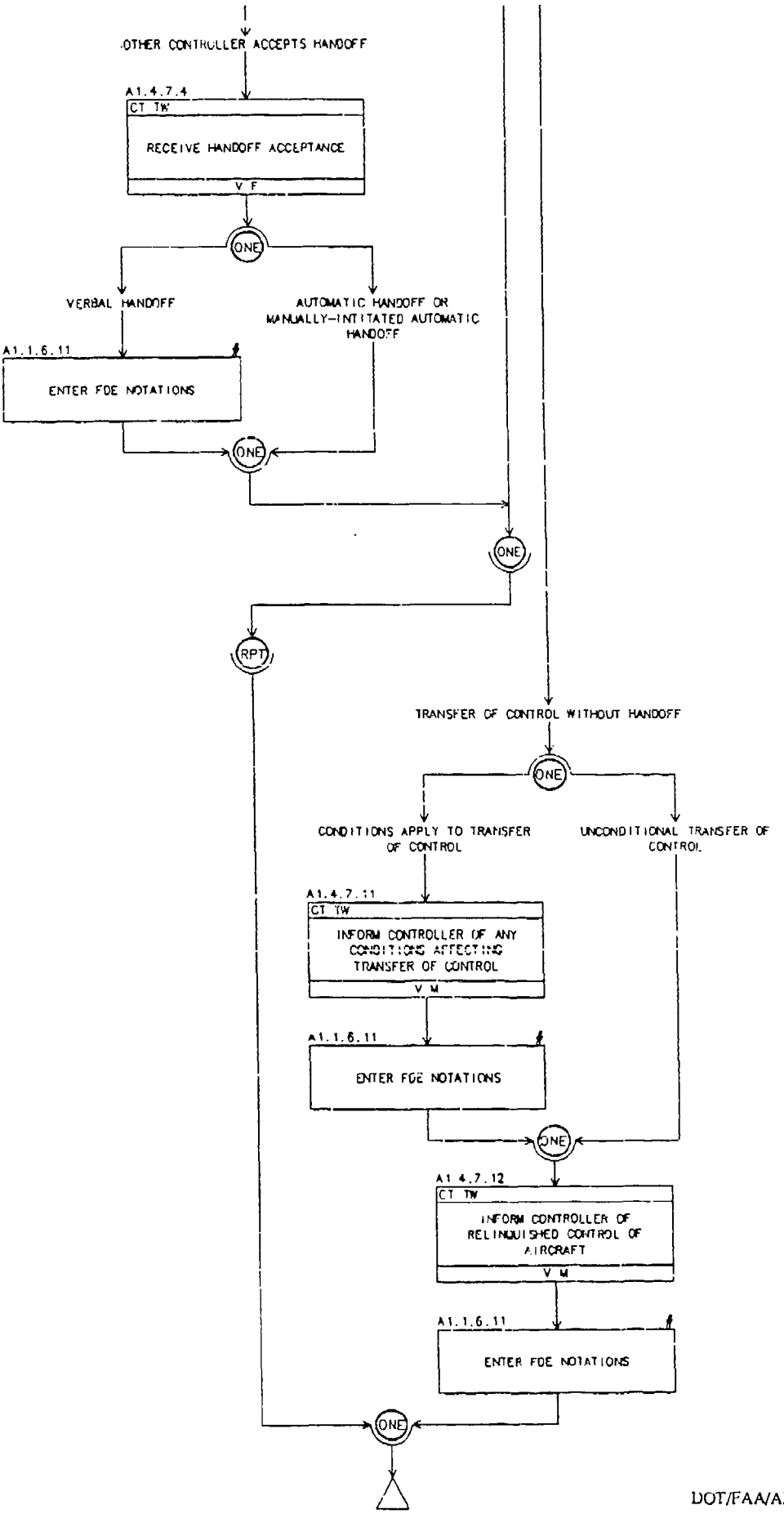
OTHER CONTROLLER ACCEPTS HANDOFF
A1.4.7.4
CT TW
RECEIVE HANDOFF ACCEPTANCE
V F
ONE
VERBAL HANDOFF
AUTOMATIC HANDOFF OR MANUALLY-INITIATED AUTOMATIC HANDOFF
A1.1.6.11
ENTER FDE NOTATIONS
ONE
ONE
RPT
TRANSFER OF CONTROL WITHOUT HANDOFF
ONE
CONDITIONS APPLY TO TRANSFER OF CONTROL
UNCONDITIONAL TRANSFER OF CONTROL
A1.4.7.11
CT TW
INFORM CONTROLLER OF ANY CONDITIONS AFFECTING TRANSFER OF CONTROL
V M
A1.1.6.11
ENTER FDE NOTATIONS
ONE
A1.4.7.12
CT TW
INFORM CONTROLLER OF RELINQUISHED CONTROL OF AIRCRAFT
V M
A1.1.6.11
ENTER FDE NOTATIONS
ONE

A1.4.8 ISSUING POINTOUTS

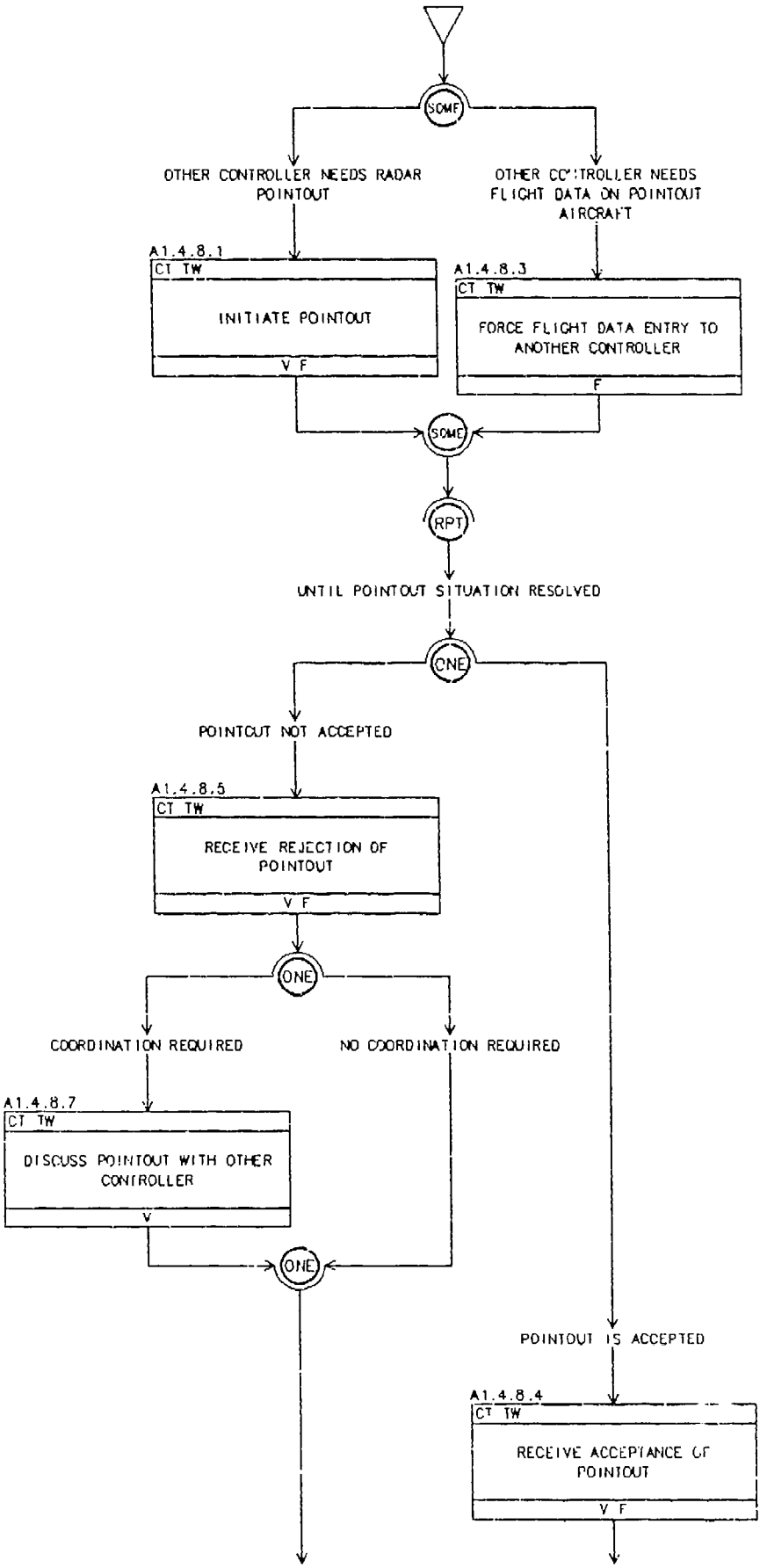

A1.4.8 ISSUING POINTOUTS (cont.)

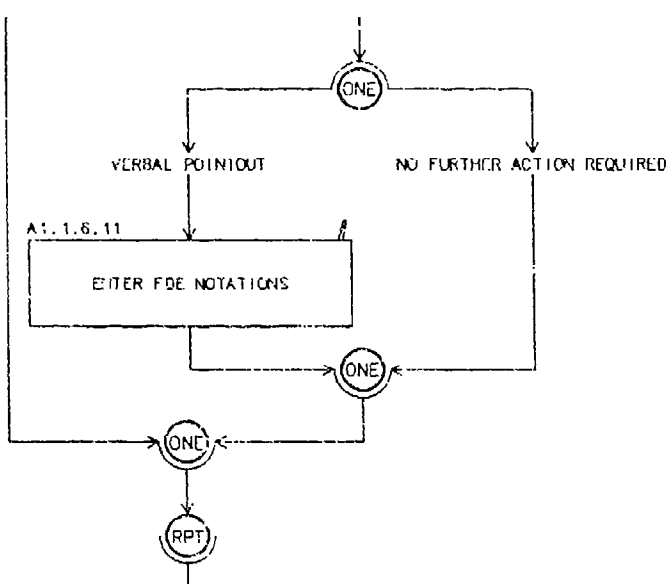

A1 4.9 RESPONDING TO POINTOUTS

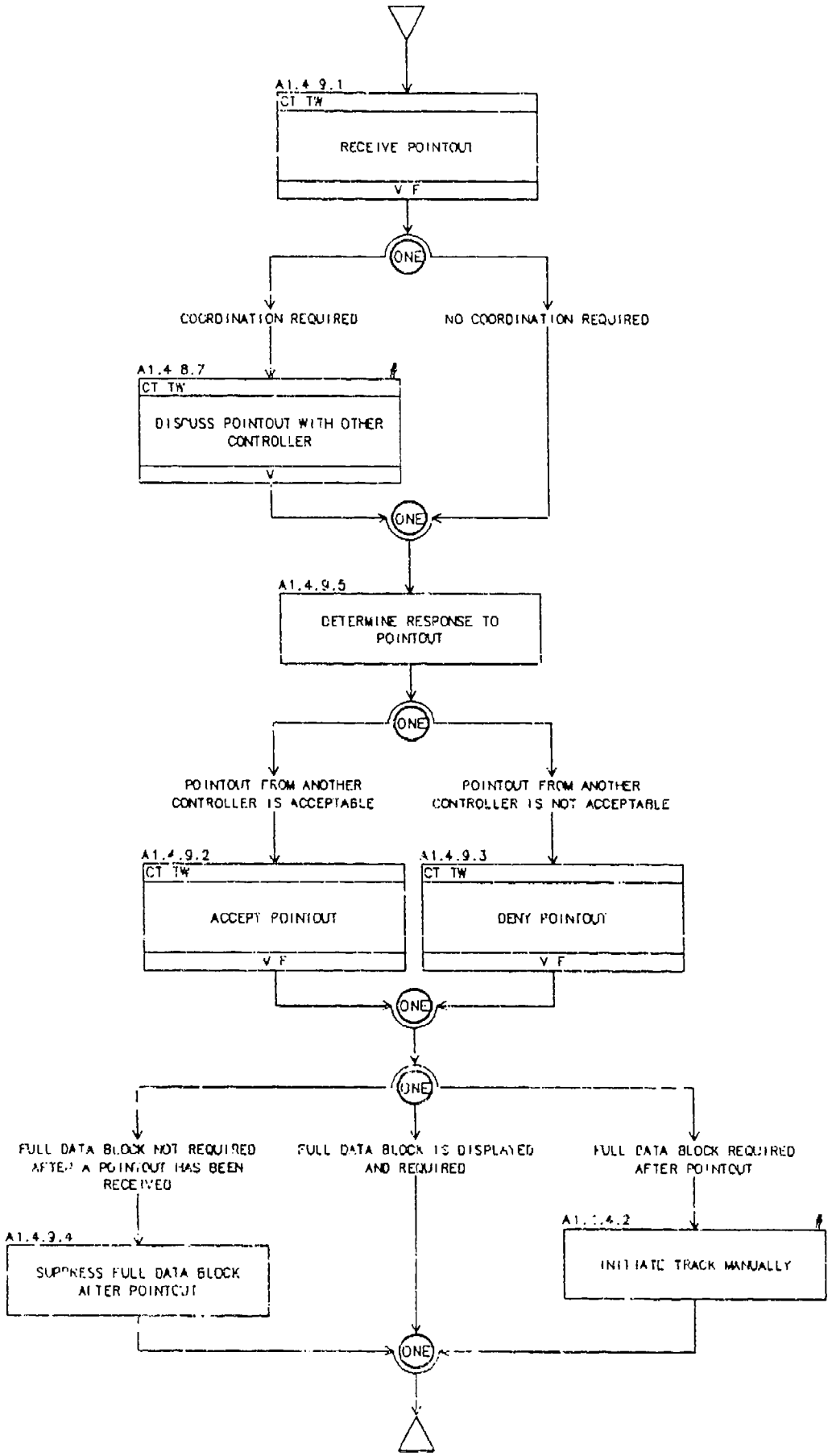

A1.4.10 ISSUING CLEARANCES

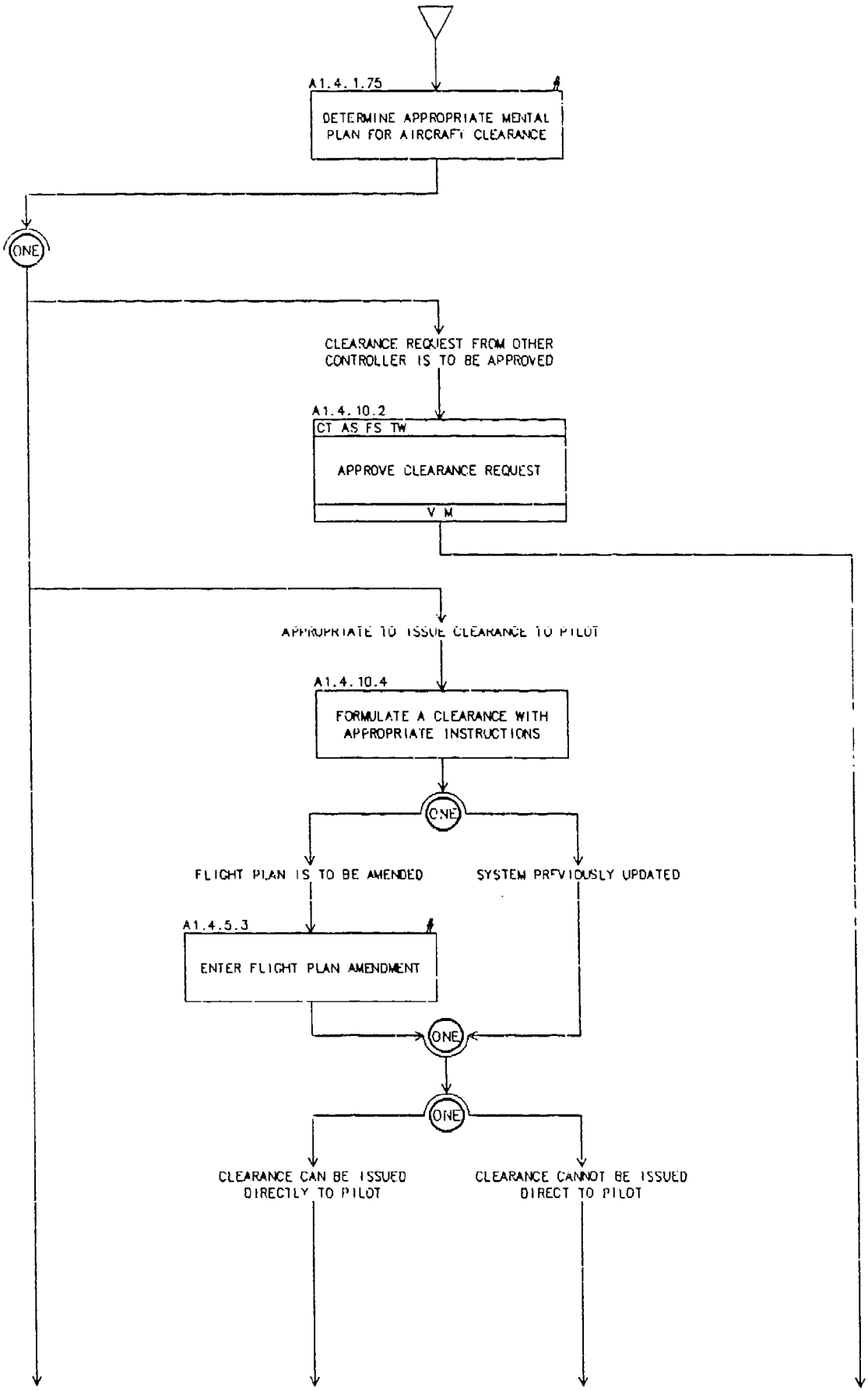

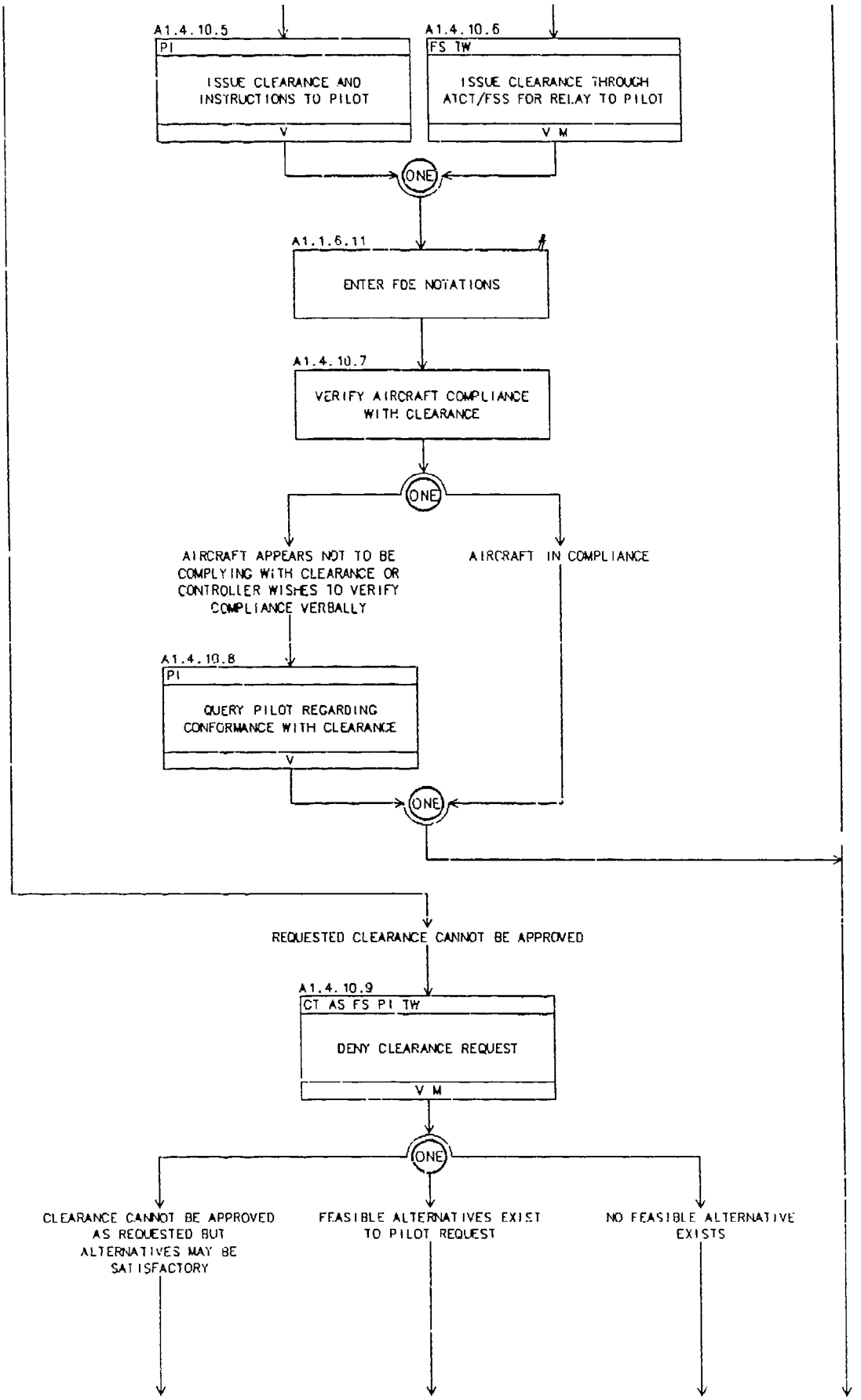
A1.4.10.5
PI
ISSUE CLEARANCE AND INSTRUCTIONS TO PILOT
V
A1.4.10.6
FS TW
ISSUE CLEARANCE THROUGH ATCT/FSS FOR RELAY TO PILOT
V M
ONE
A1.1.6.11
ENTER FDE NOTATIONS
A1.4.10.7
VERIFY AIRCRAFT COMPLIANCE WITH CLEARANCE
ONE
AIRCRAFT APPEARS NOT TO BE COMPLYING WITH CLEARANCE OR CONTROLLER WISHES TO VERIFY COMPLIANCE VERBALLY
AIRCRAFT IN COMPLIANCE
A1.4.10.8
PI
QUERY PILOT REGARDING CONFORMANCE WITH CLEARANCE
V
ONE
REQUESTED CLEARANCE CANNOT BE APPROVED
A1.4.10.9
CT AS FS PI TW
DENY CLEARANCE REQUEST
V M
ONE
CLEARANCE CANNOT BE APPROVED AS REQUESTED BUT ALTERNATIVES MAY BE SATISFACTORY
FEASIBLE ALTERNATIVES EXIST TO PILOT REQUEST
NO FEASIBLE ALTERNATIVE EXISTS

A1.4.10 ISSUING CLEARANCES (cont.)

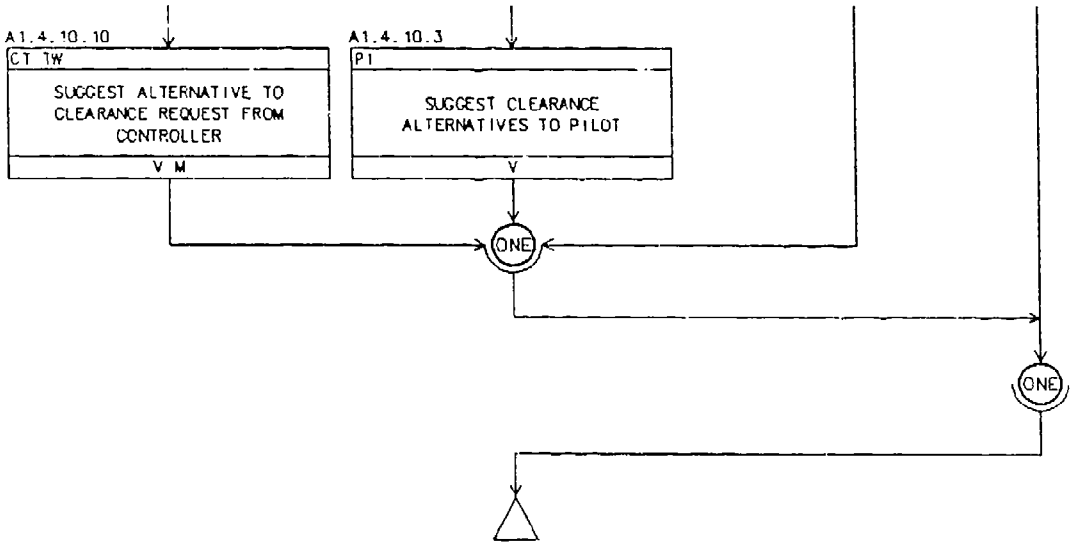

A1.4.12 MANAGING AUTOMATED HANDOFF FEATURES

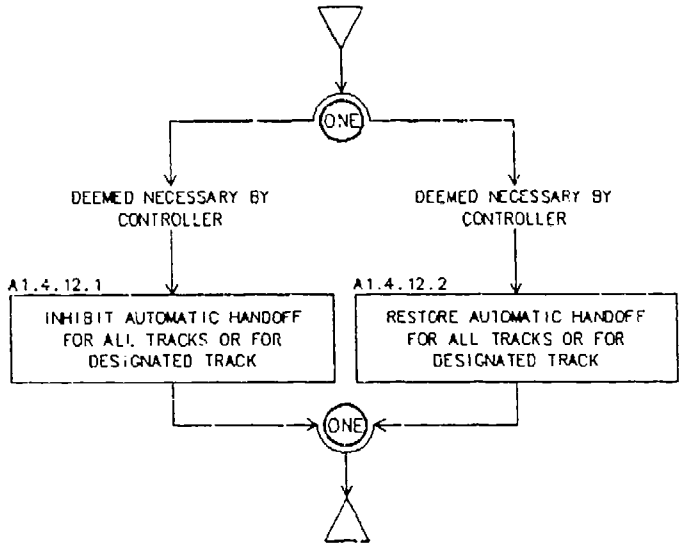

A1.4 13 ESTABLISHING, MAINTAINING, AND TERMINATING RADIO COMMUNICATIONS

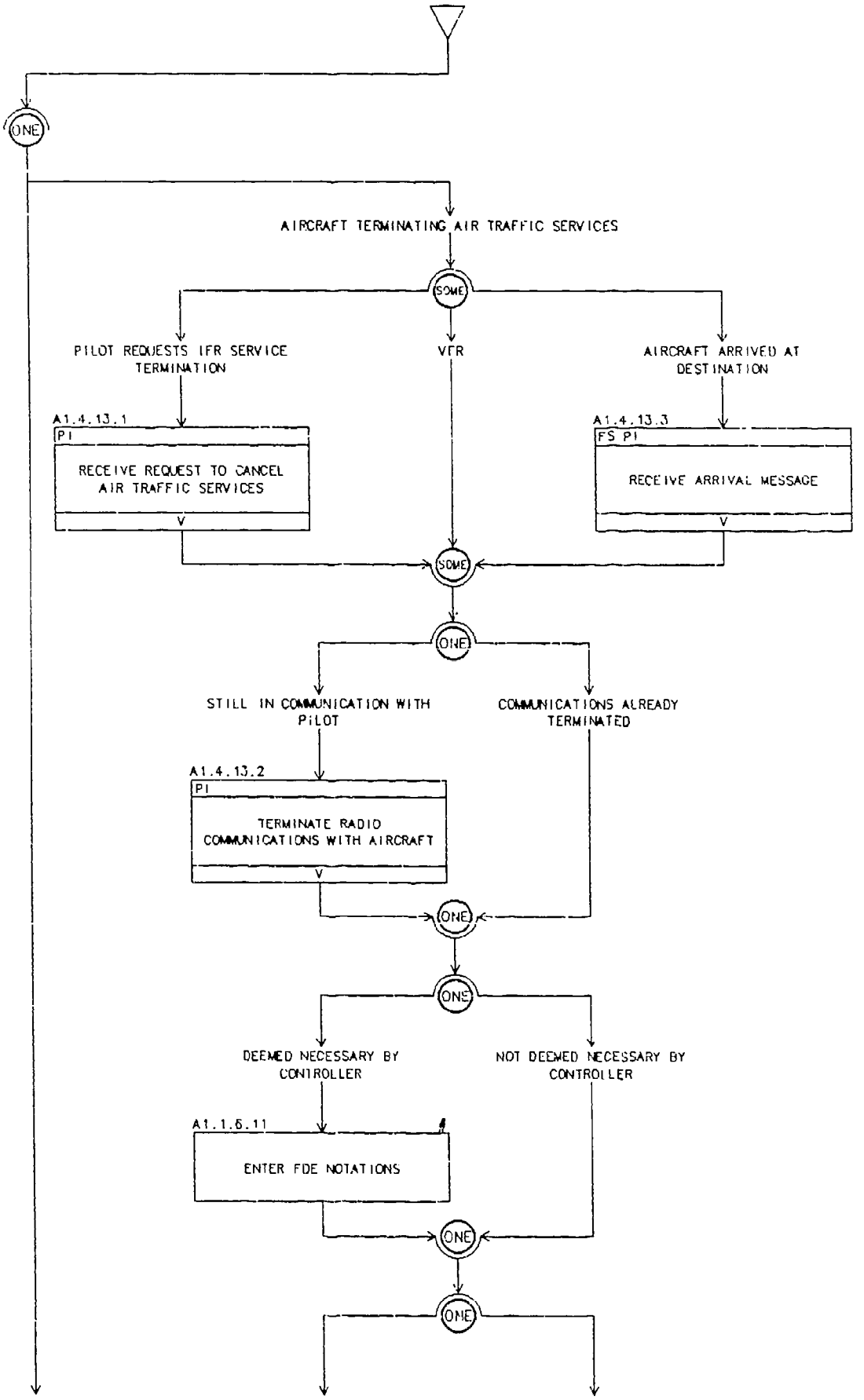

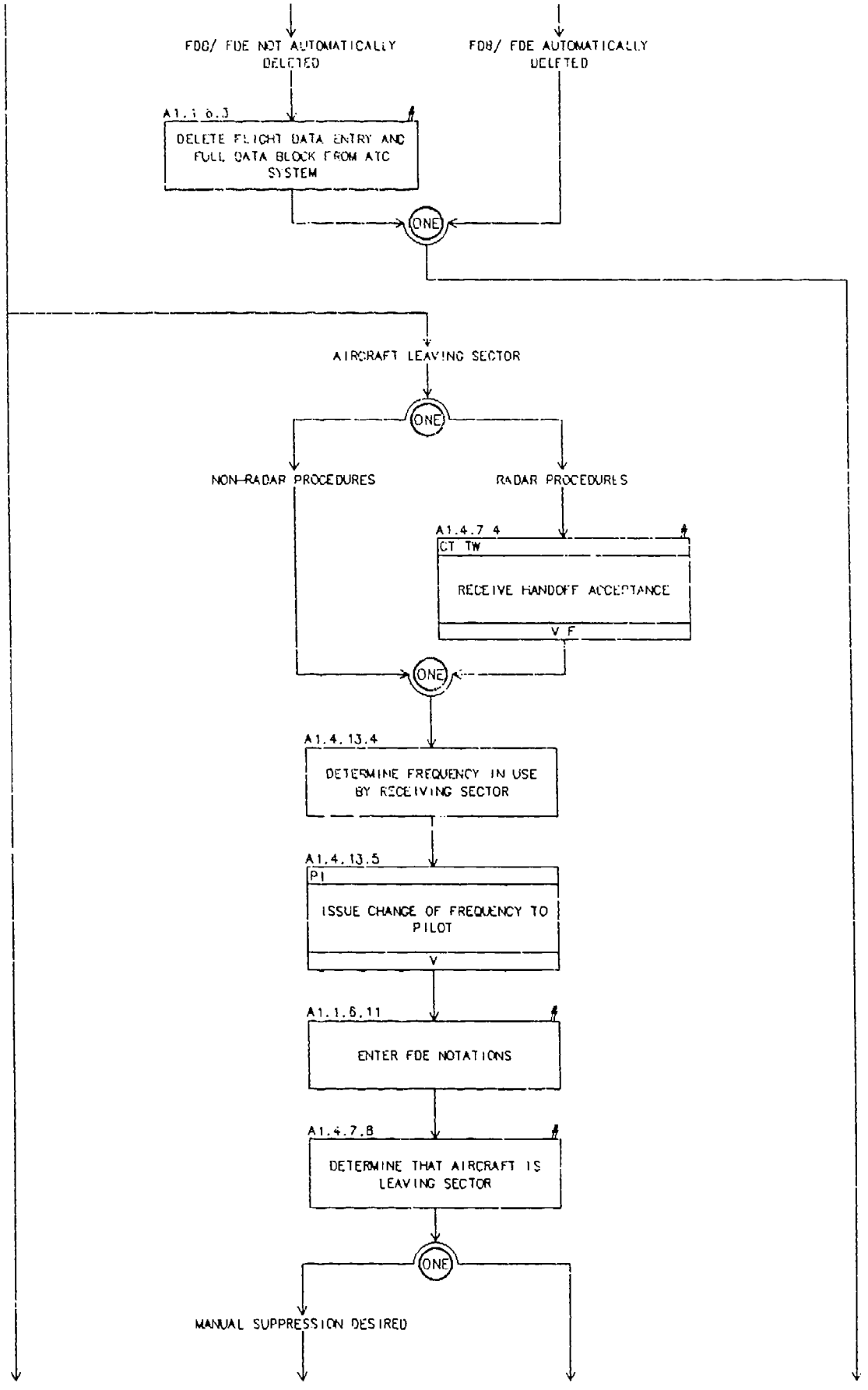
FDB/ FDE NOT AUTOMATICALLY DELETED
FDB/ FDE AUTOMATICALLY DELETED
A1.1.6.3
DELETE FLIGHT DATA ENTRY AND FULL DATA BLOCK FROM ATC SYSTEM
ONE
AIRCRAFT LEAVING SECTOR
ONE
NON-RADAR PROCEDURES
RADAR PROCEDURES
A1.4.7.4
CT TW
RECEIVE HANDOFF ACCEPTANCE
V F
ONE
A1.4.13.4
DETERMINE FREQUENCY IN USE BY RECEIVING SECTOR
A1.4.13.5
PI
ISSUE CHANGE OF FREQUENCY TO PILOT
V
A1.1.6.11
ENTER FDE NOTATIONS
A1.4.7.8
DETERMINE THAT AIRCRAFT IS LEAVING SECTOR
ONE
MANUAL SUPPRESSION DESIRED

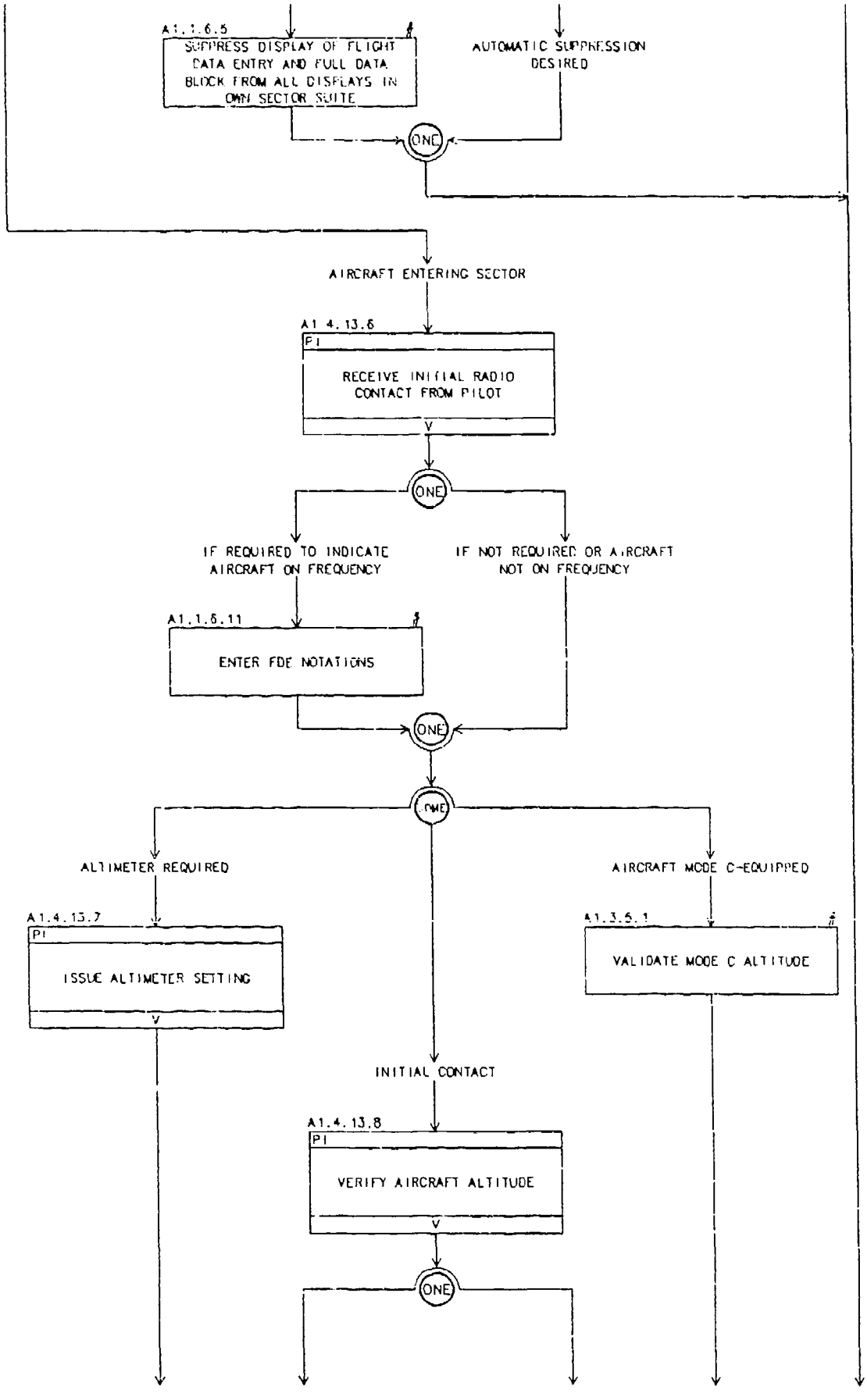
A1.1.6.5
SUPPRESS DISPLAY OF FLIGHT DATA ENTRY AND FULL DATA BLOCK FROM ALL DISPLAYS IN OWN SECTOR SUITE
AUTOMATIC SUPPRESSION DESIRED
ONE
AIRCRAFT ENTERING SECTOR
A1.4.13.6
PI
RECEIVE INITIAL RADIO CONTACT FROM PILOT
V
ONE
IF REQUIRED TO INDICATE AIRCRAFT ON FREQUENCY
IF NOT REQUIRED OR AIRCRAFT NOT ON FREQUENCY
A1.1.6.11
ENTER FDE NOTATIONS
ONE
ONE
ALTIMETER REQUIRED
AIRCRAFT MODE C-EQUIPPED
A1.4.13.7
PI
ISSUE ALTIMETER SETTING
V
A1.3.5.1
VALIDATE MODE C ALTITUDE
INITIAL CONTACT
A1.4.13.8
PI
VERIFY AIRCRAFT ALTITUDE
V
ONE

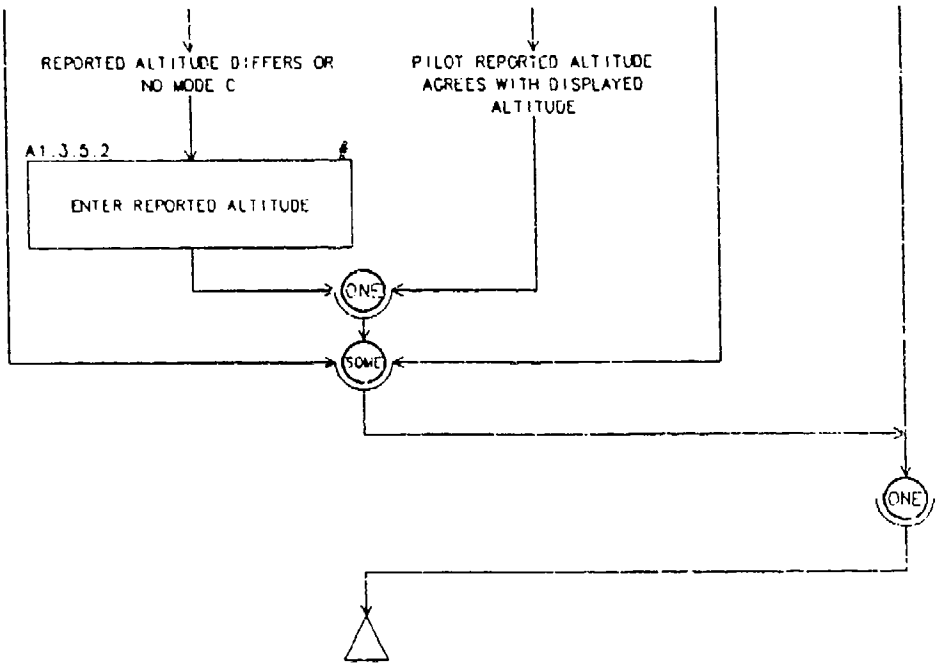
REPORTED ALTITUDE DIFFERS OR NO MODE C
PILOT REPORTED ALTITUDE AGREES WITH DISPLAYED ALTITUDE
A1.3.5.2
ENTER REPORTED ALTITUDE
ONE
SOME
ONE

A1.4.14 ESTABLISHING/ REESTABLISHING RADAR IDENTIFICATION

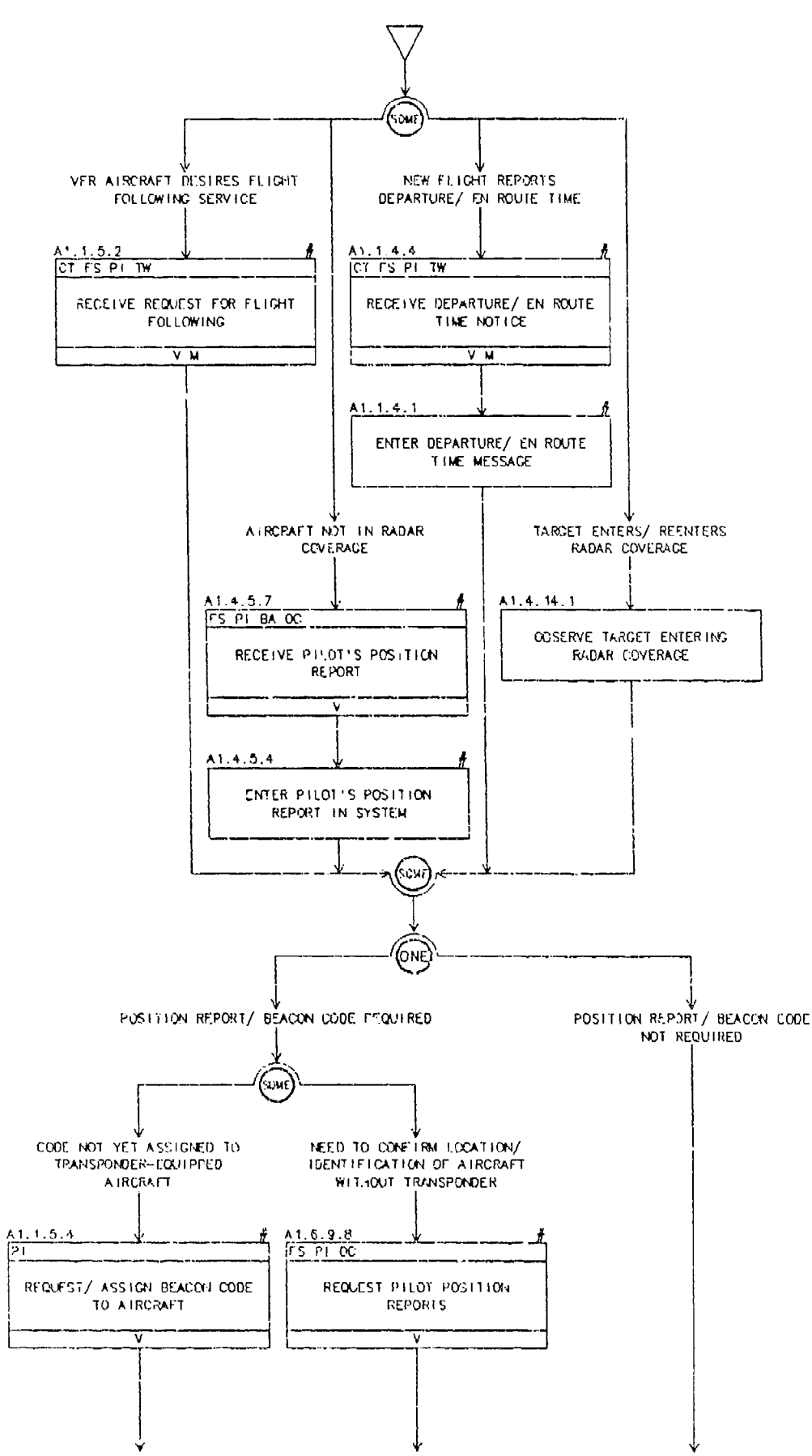

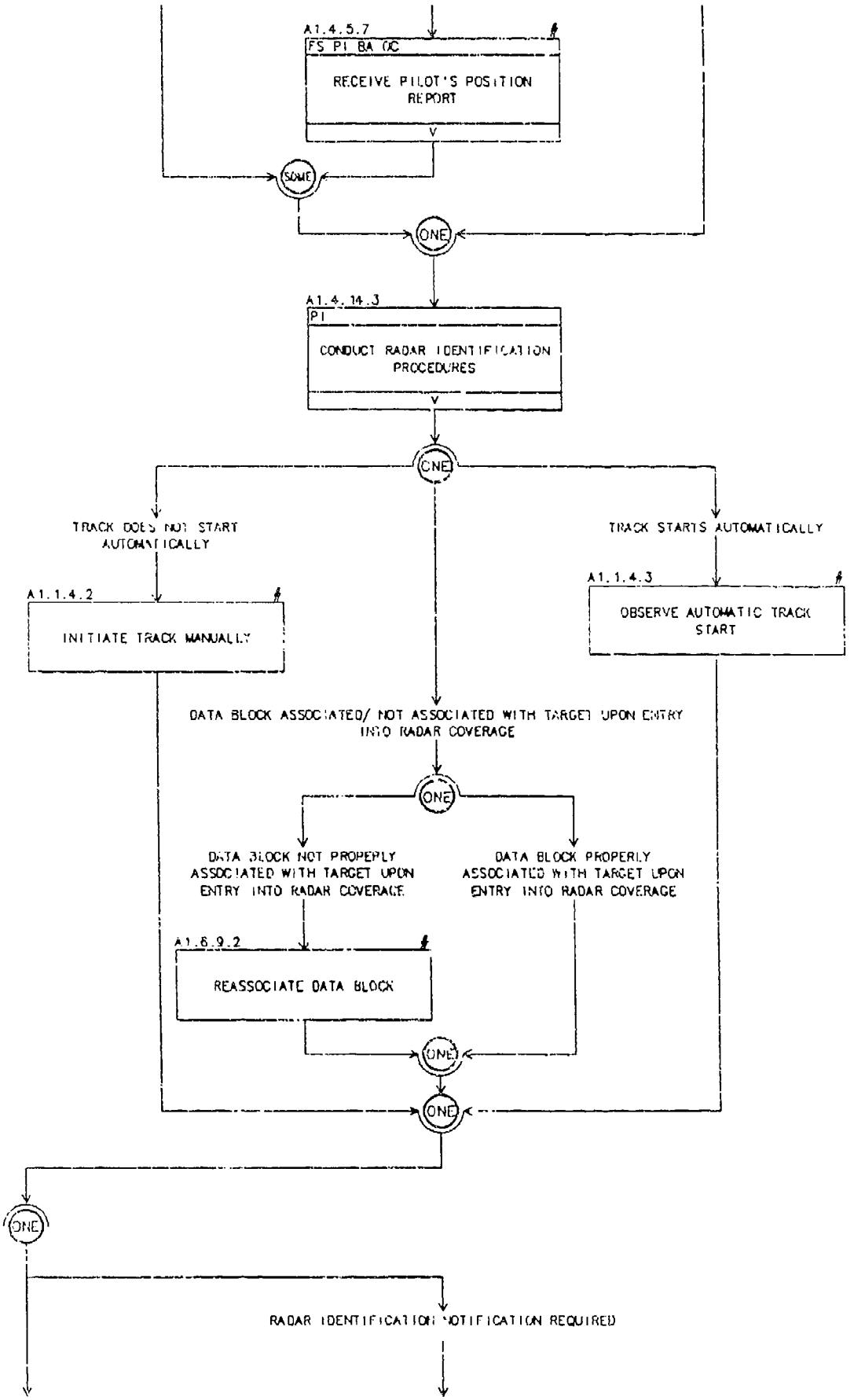
A1.4.5.7
FS PI BA OC
RECEIVE PILOT'S POSITION REPORT
SOME
ONE
A1.4.14.3
PI
CONDUCT RADAR IDENTIFICATION PROCEDURES
ONE
TRACK DOES NOT START AUTOMATICALLY
TRACK STARTS AUTOMATICALLY
A1.1.4.2
INITIATE TRACK MANUALLY
A1.1.4.3
OBSERVE AUTOMATIC TRACK START
DATA BLOCK ASSOCIATED/ NOT ASSOCIATED WITH TARGET UPON ENTRY INTO RADAR COVERAGE
ONE
DATA BLOCK NOT PROPERLY ASSOCIATED WITH TARGET UPON ENTRY INTO RADAR COVERAGE
DATA BLOCK PROPERLY ASSOCIATED WITH TARGET UPON ENTRY INTO RADAR COVERAGE
A1.6.9.2
REASSOCIATE DATA BLOCK
ONE
ONE
ONE
RADAR IDENTIFICATION NOTIFICATION REQUIRED

A1.4.14 ESTABLISHING/ REESTABLISHING RADAR IDENTIFICATION (cont.)

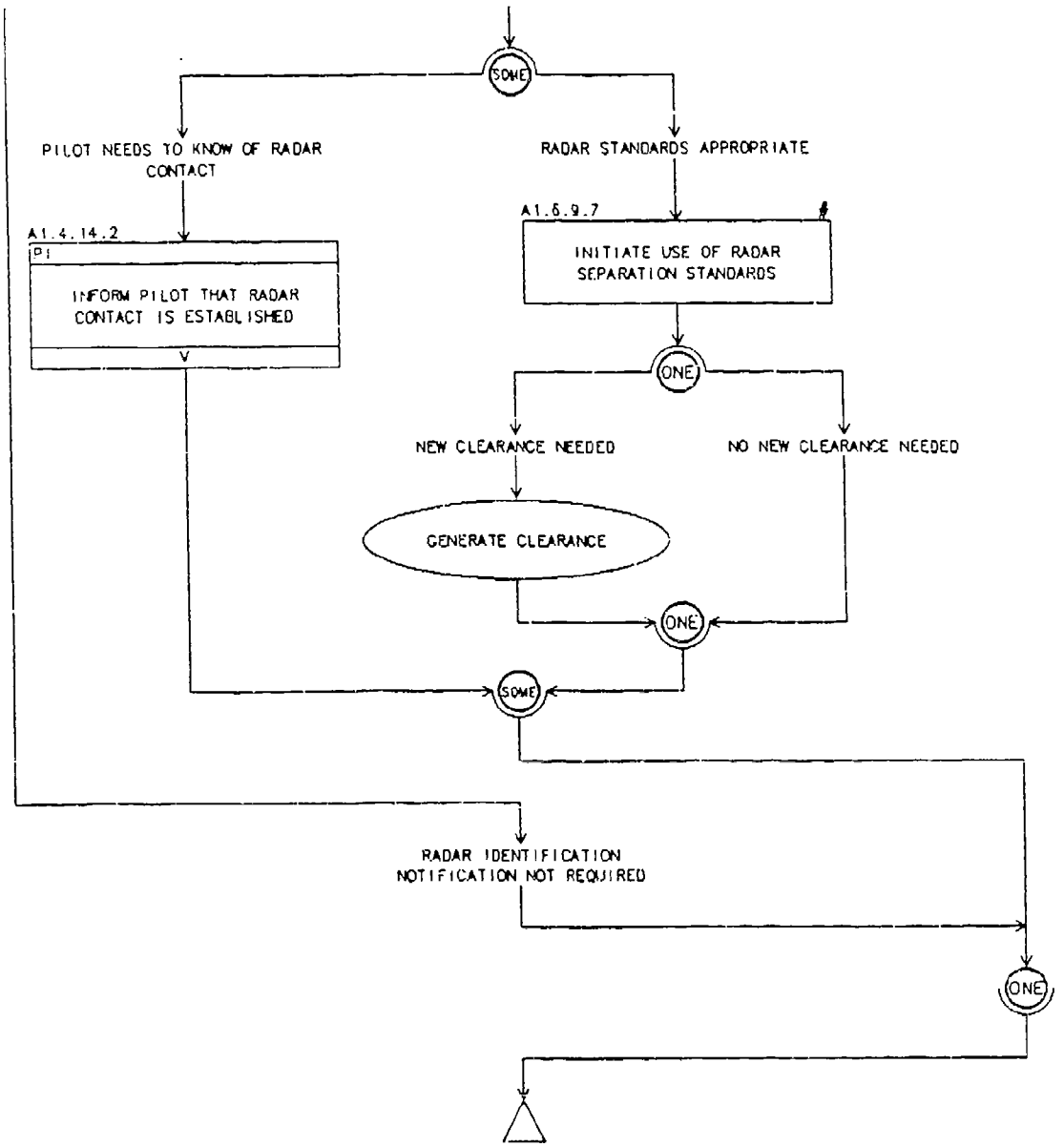

A1.5 ASSESS WEATHER IMPACT

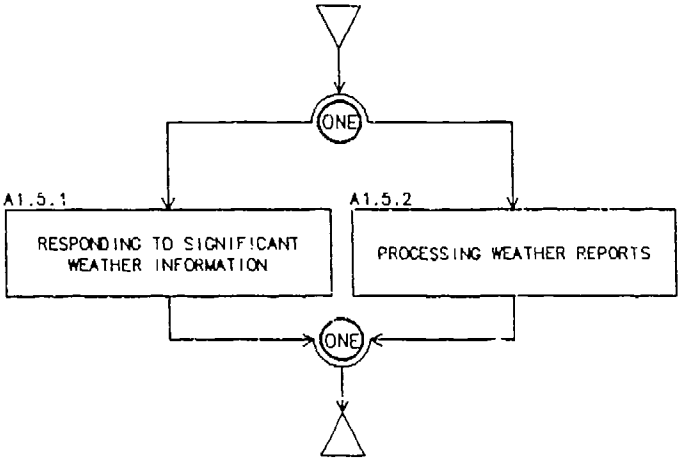

A1.5.1 RESPONDING TO SIGNIFICANT WEATHER INFORMATION

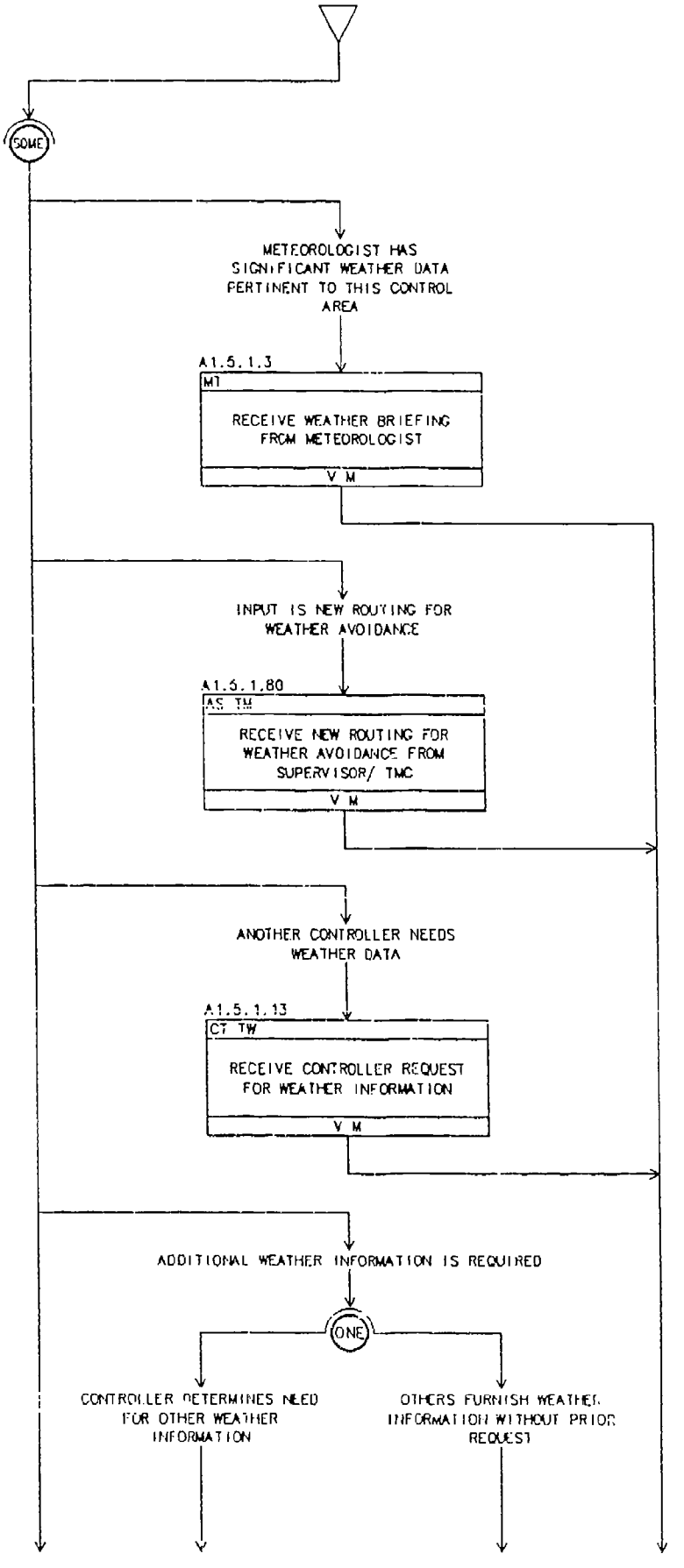

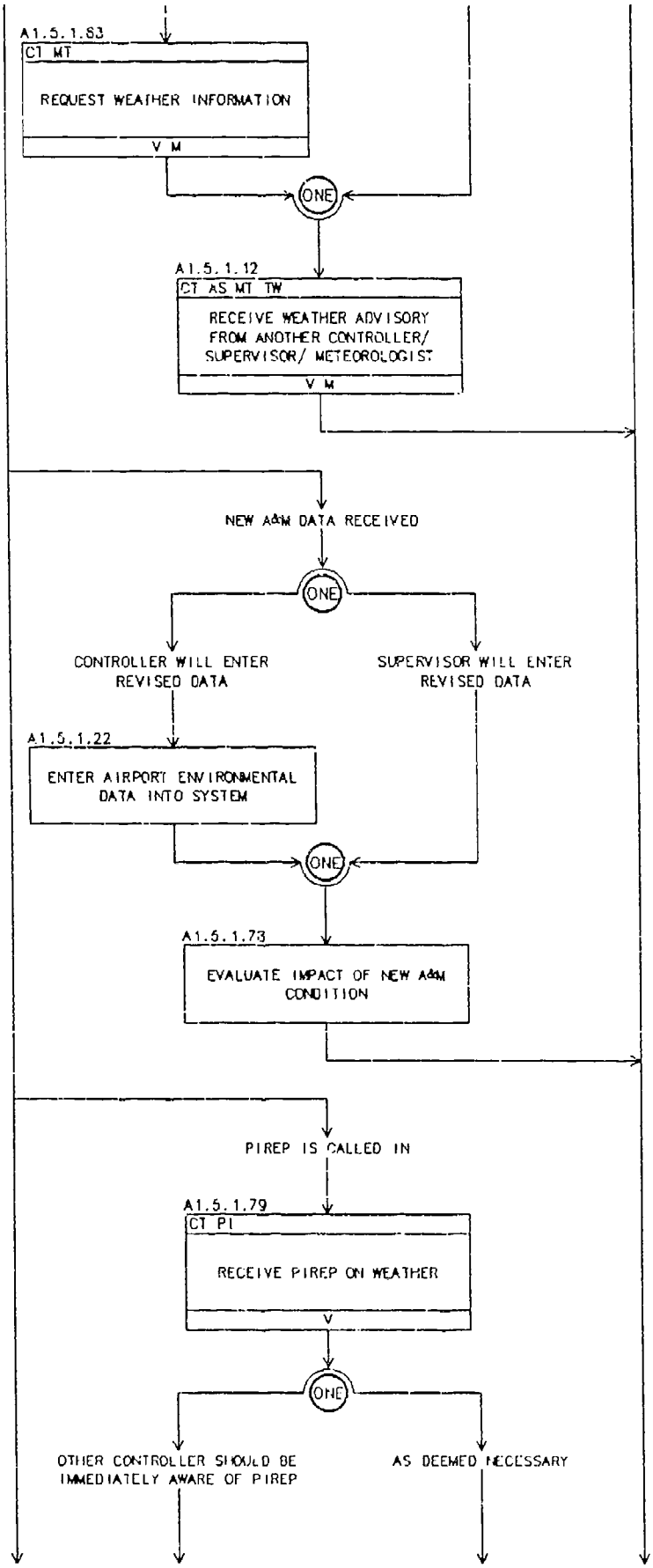
A1.5.1.83
CT MT
REQUEST WEATHER INFORMATION
V M
ONE
A1.5.1.12
CT AS MT TW
RECEIVE WEATHER ADVISORY FROM ANOTHER CONTROLLER/ SUPERVISOR/ METEOROLOGIST
V M
NEW A&M DATA RECEIVED
ONE
CONTROLLER WILL ENTER REVISED DATA
SUPERVISOR WILL ENTER REVISED DATA
A1.5.1.22
ENTER AIRPORT ENVIRONMENTAL DATA INTO SYSTEM
ONE
A1.5.1.73
EVALUATE IMPACT OF NEW A&M CONDITION
PIREP IS CALLED IN
A1.5.1.79
CT PI
RECEIVE PIREP ON WEATHER
V
ONE
OTHER CONTROLLER SHOULD BE IMMEDIATELY AWARE OF PIREP
AS DEEMED NECESSARY

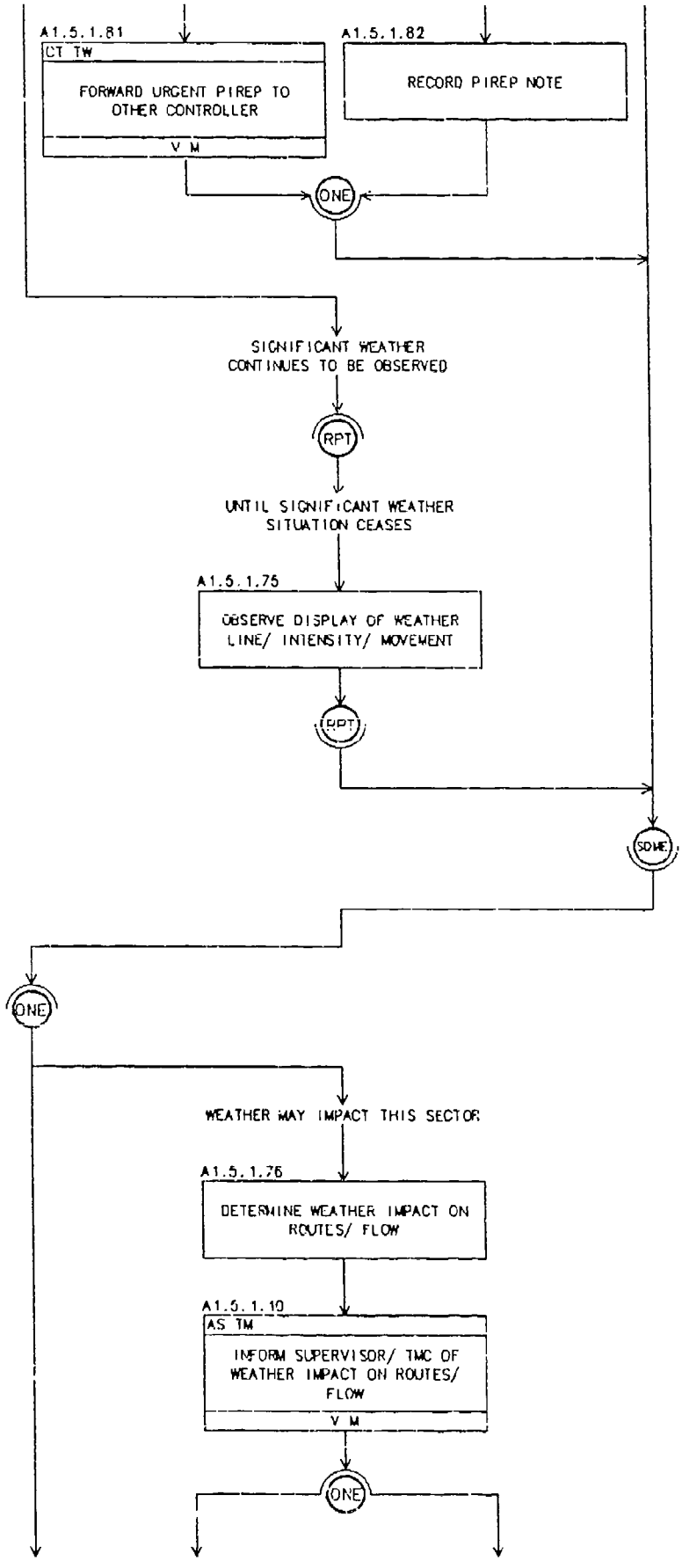
A1.5.1.81
CT TW
FORWARD URGENT PIREP TO OTHER CONTROLLER
V M
A1.5.1.82
RECORD PIREP NOTE
ONE
SIGNIFICANT WEATHER CONTINUES TO BE OBSERVED
RPT
UNTIL SIGNIFICANT WEATHER SITUATION CEASES
A1.5.1.75
OBSERVE DISPLAY OF WEATHER LINE/ INTENSITY/ MOVEMENT
RPT
SOME
ONE
WEATHER MAY IMPACT THIS SECTOR
A1.5.1.76
DETERMINE WEATHER IMPACT ON ROUTES/ FLOW
A1.5.1.10
AS TM
INFORM SUPERVISOR/ TMC OF WEATHER IMPACT ON ROUTES/ FLOW
V M
ONE

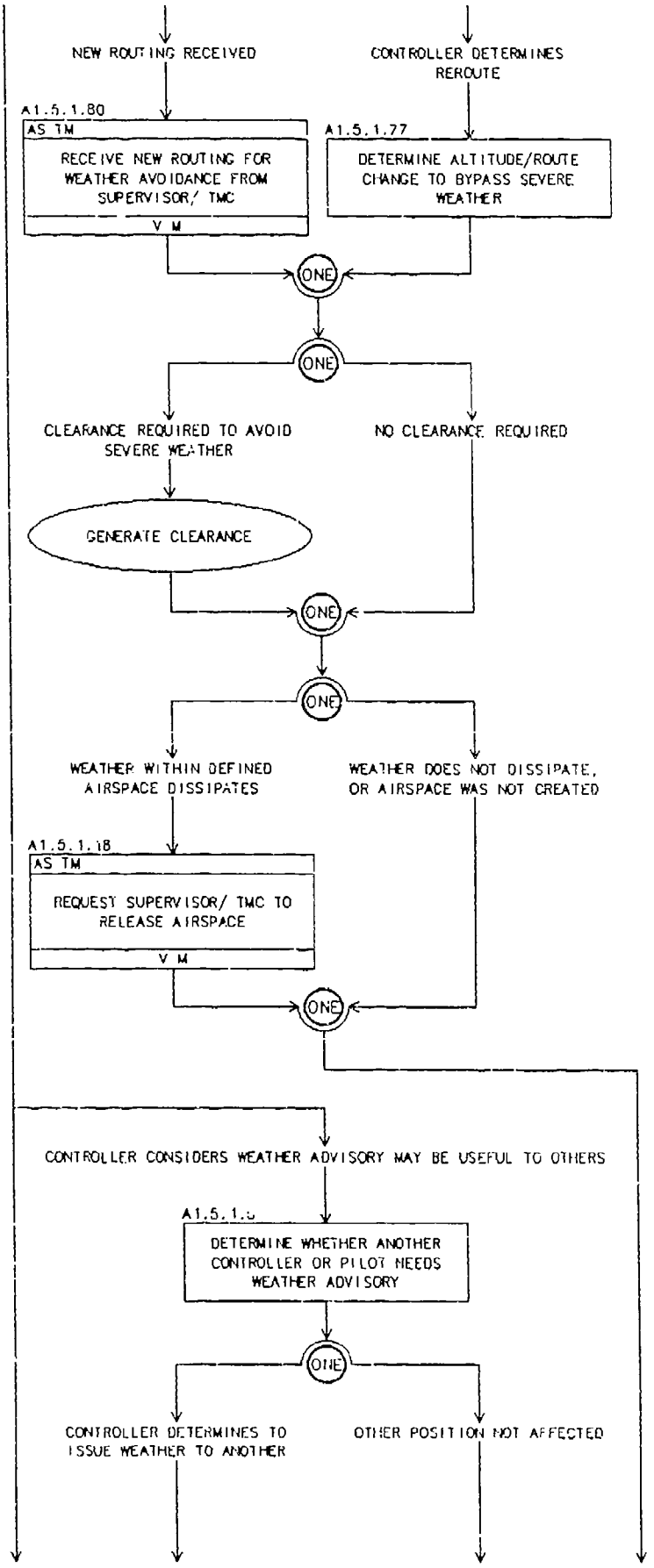
NEW ROUTING RECEIVED
CONTROLLER DETERMINES REROUTE
A1.5.1.80
AS TM
RECEIVE NEW ROUTING FOR WEATHER AVOIDANCE FROM SUPERVISOR/ TMC
V M
A1.5.1.77
DETERMINE ALTITUDE/ROUTE CHANGE TO BYPASS SEVERE WEATHER
ONE
ONE
CLEARANCE REQUIRED TO AVOID SEVERE WEATHER
NO CLEARANCE REQUIRED
GENERATE CLEARANCE
ONE
ONE
WEATHER WITHIN DEFINED AIRSPACE DISSIPATES
WEATHER DOES NOT DISSIPATE, OR AIRSPACE WAS NOT CREATED
A1.5.1.18
AS TM
REQUEST SUPERVISOR/ TMC TO RELEASE AIRSPACE
V M
ONE
CONTROLLER CONSIDERS WEATHER ADVISORY MAY BE USEFUL TO OTHERS
A1.5.1.6
DETERMINE WHETHER ANOTHER CONTROLLER OR PILOT NEEDS WEATHER ADVISORY
ONE
CONTROLLER DETERMINES TO ISSUE WEATHER TO ANOTHER
OTHER POSITION NOT AFFECTED

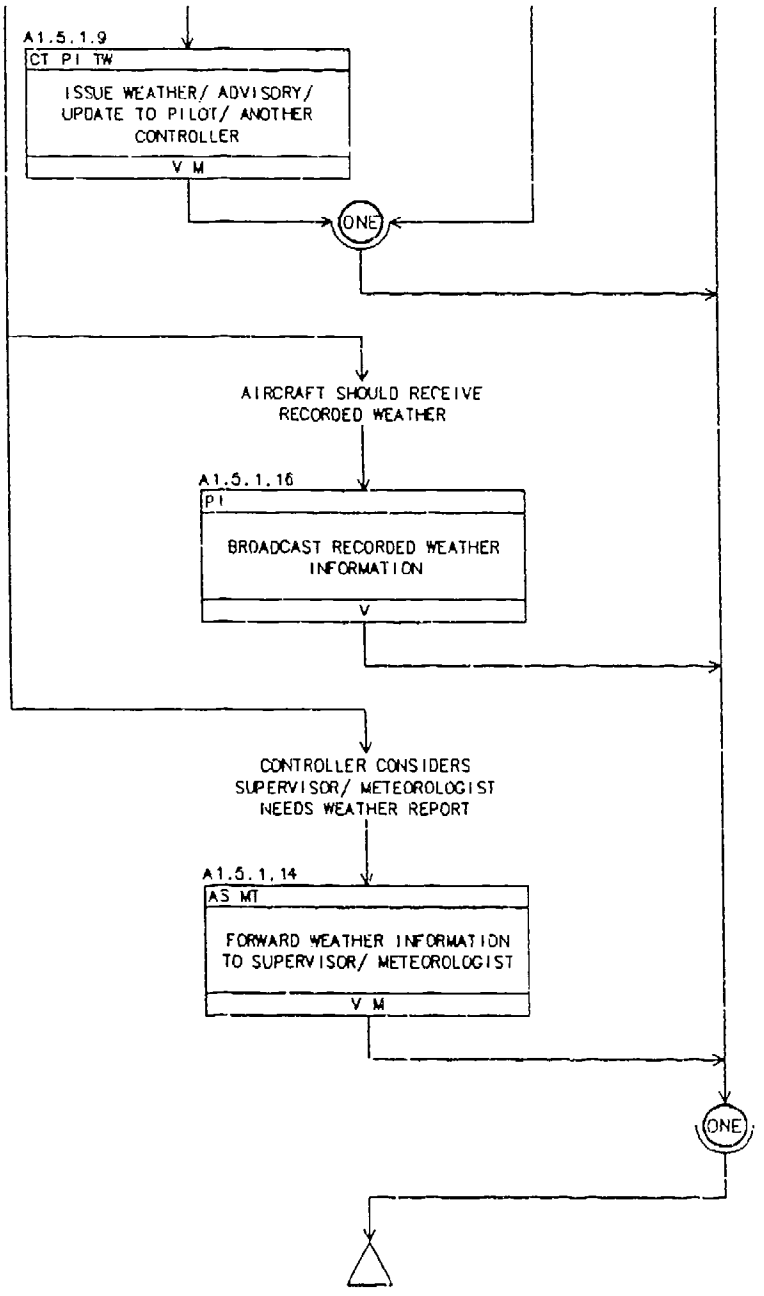
A1.5.1.9
CT PI TW
ISSUE WEATHER/ ADVISORY/ UPDATE TO PILOT/ ANOTHER CONTROLLER
V M
ONE
AIRCRAFT SHOULD RECEIVE RECORDED WEATHER
A1.5.1.16
PI
BROADCAST RECORDED WEATHER INFORMATION
V
CONTROLLER CONSIDERS SUPERVISOR/ METEOROLOGIST NEEDS WEATHER REPORT
A1.5.1.14
AS MT
FORWARD WEATHER INFORMATION TO SUPERVISOR/ METEOROLOGIST
V M
ONE

A1.5.2 PROCESSING WEATHER REPORTS

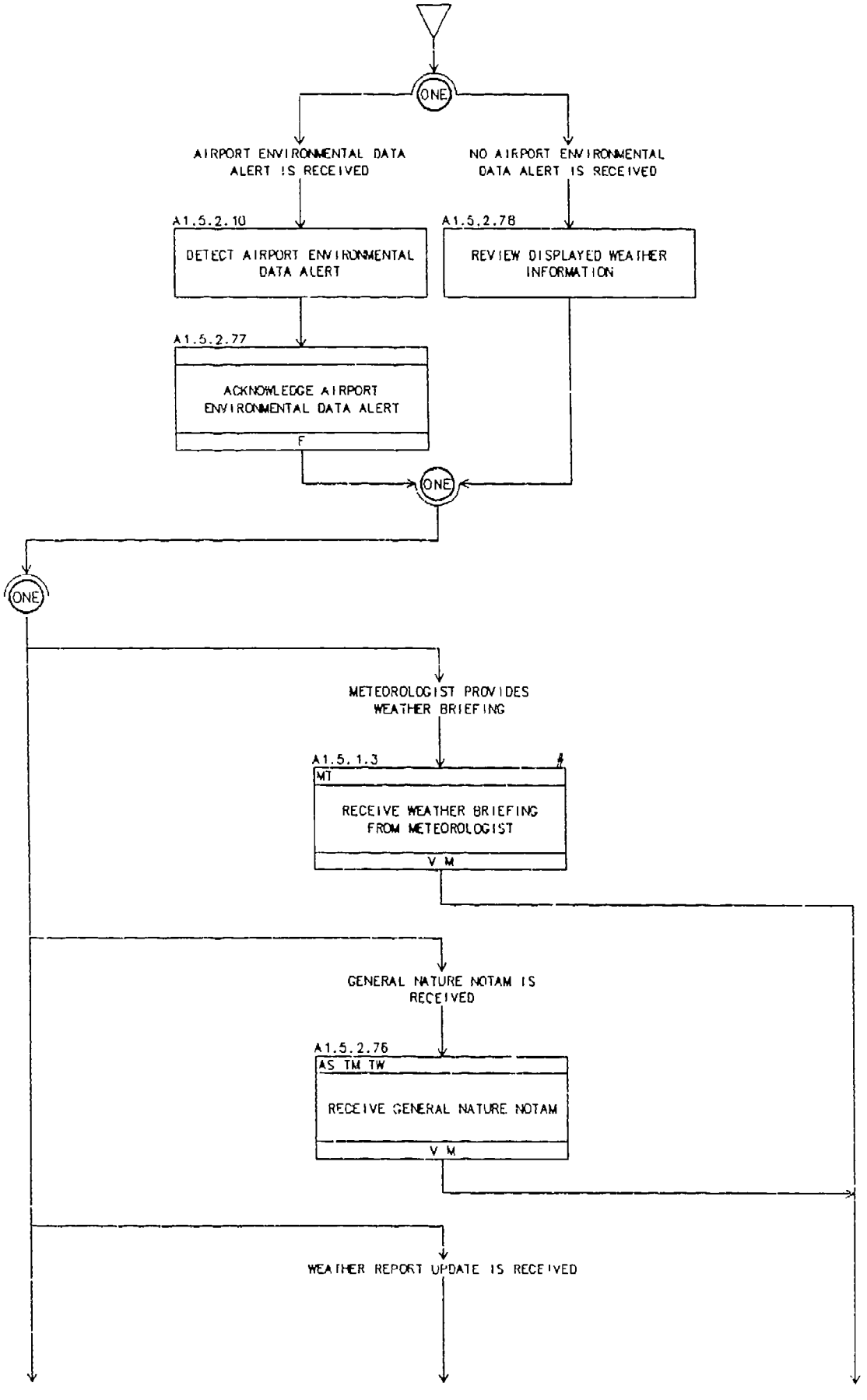

A1.5.2 PROCESSING WEATHER REPORTS (cont.)

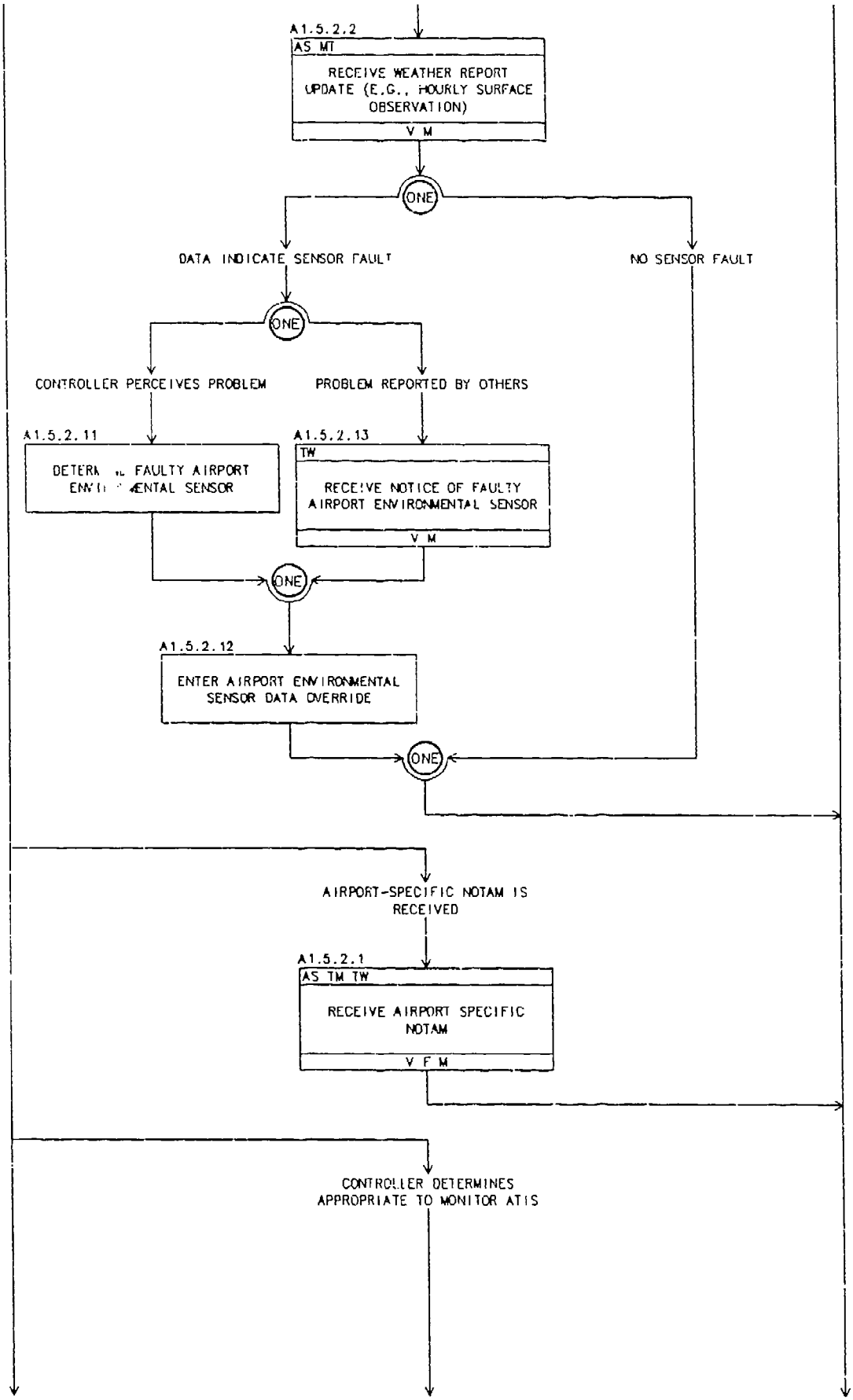

A1.5.2 PROCESSING WEATHER REPORTS (cont.)

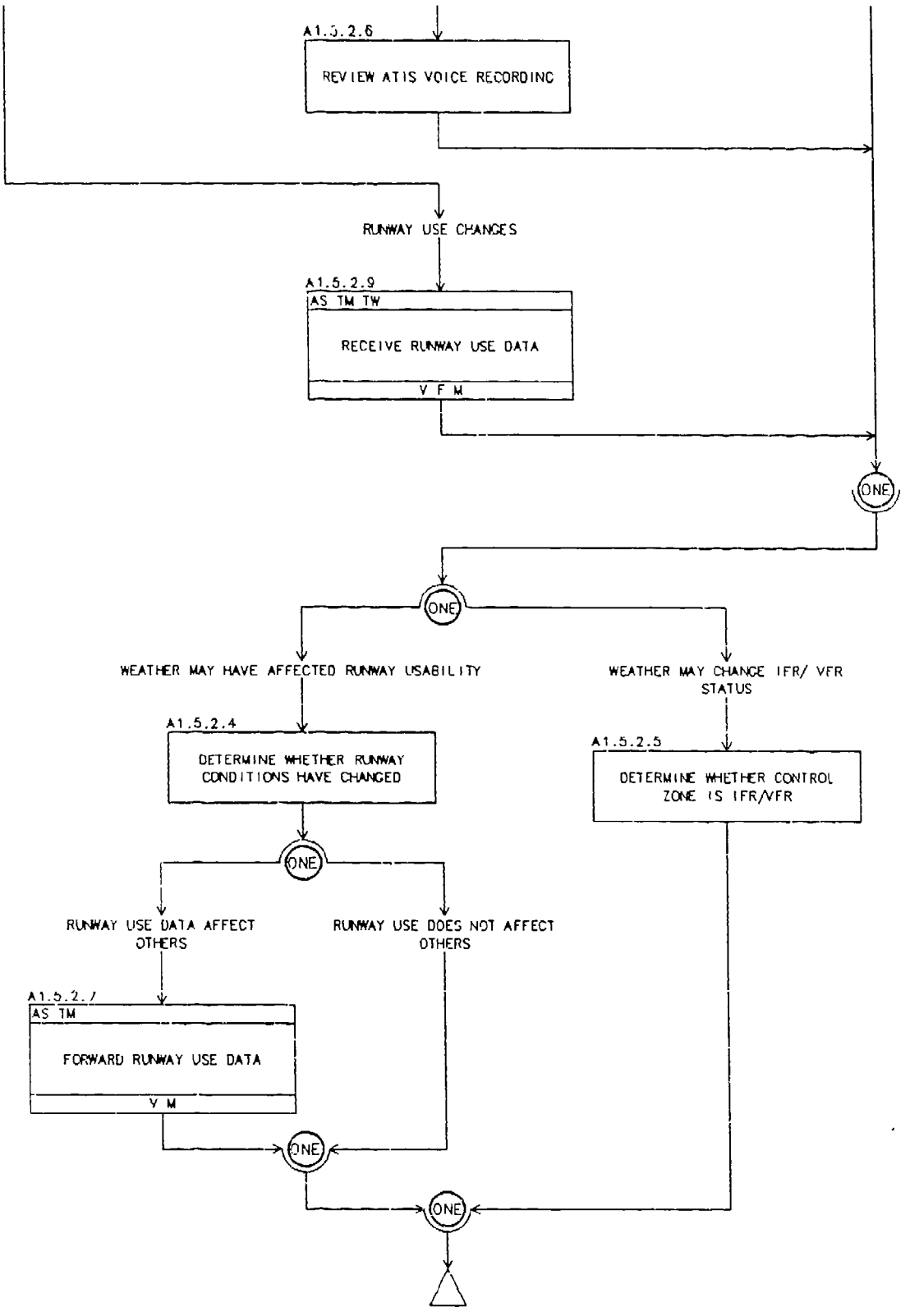

A1.6 MANAGE SECTOR/POSITION RESOURCES

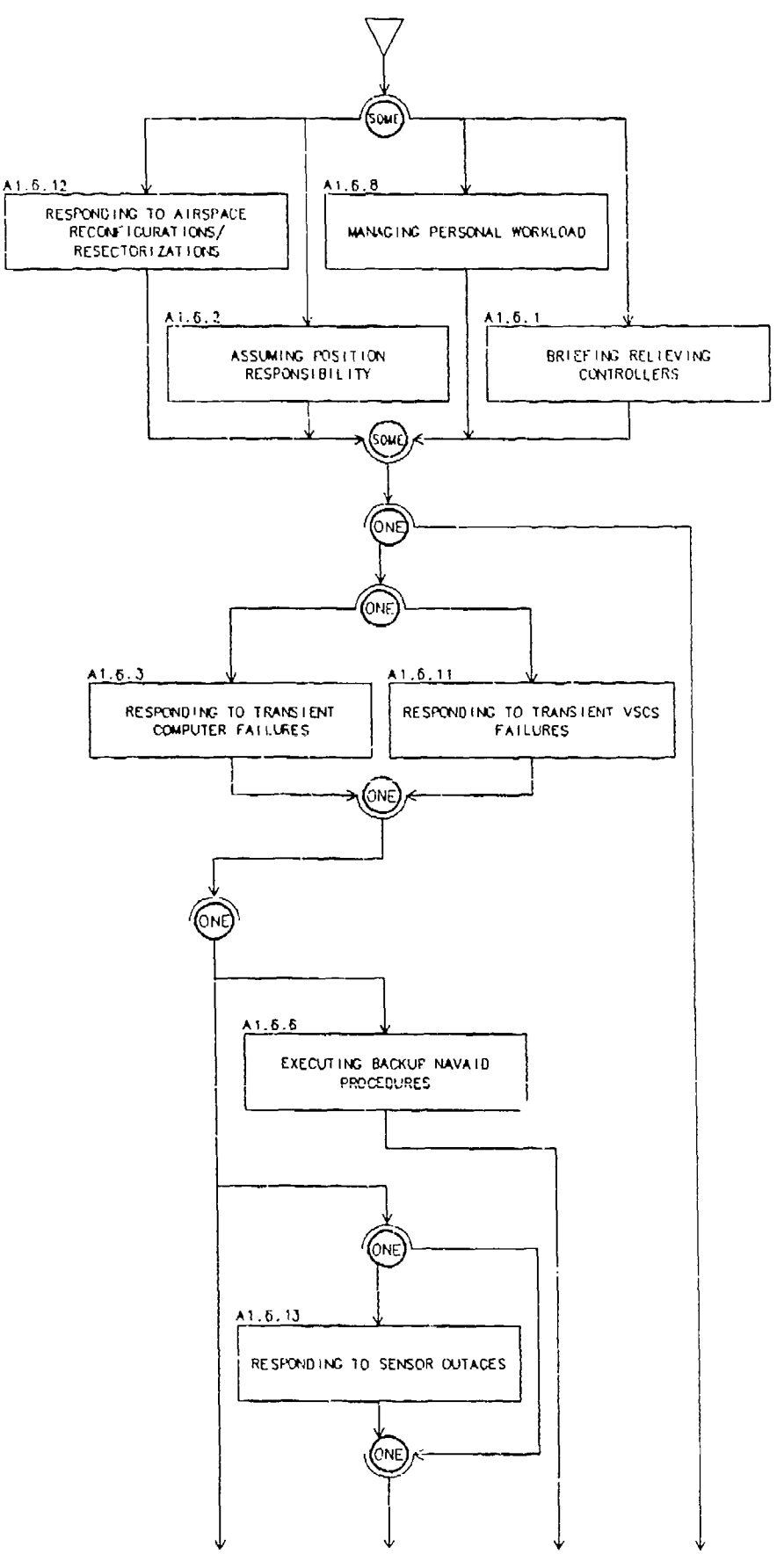

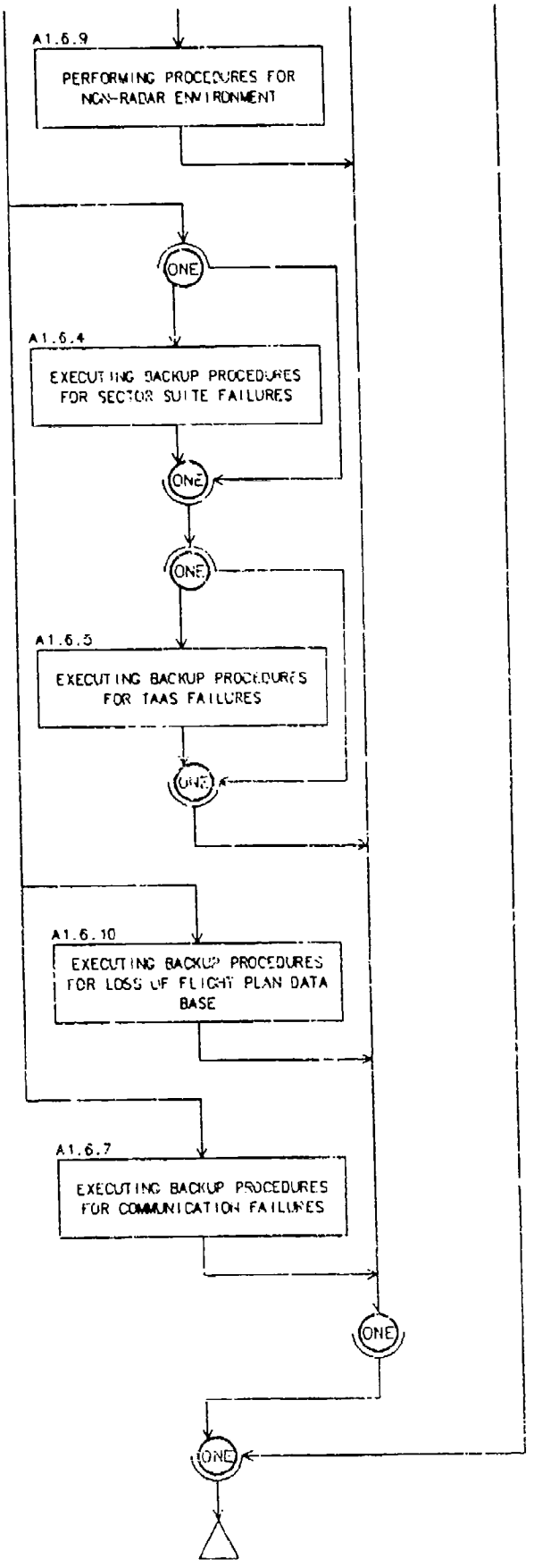
A1.6.9
PERFORMING PROCEDURES FOR NON-RADAR ENVIRONMENT
ONE
A1.6.4
EXECUTING BACKUP PROCEDURES FOR SECTOR SUITE FAILURES
ONE
ONE
A1.6.5
EXECUTING BACKUP PROCEDURES FOR TAAS FAILURES
ONE
A1.6.10
EXECUTING BACKUP PROCEDURES FOR LOSS OF FLIGHT PLAN DATA BASE
A1.6.7
EXECUTING BACKUP PROCEDURES FOR COMMUNICATION FAILURES
ONE
ONE

A1.6.1 BRIEFING RELIEVING CONTROLLERS

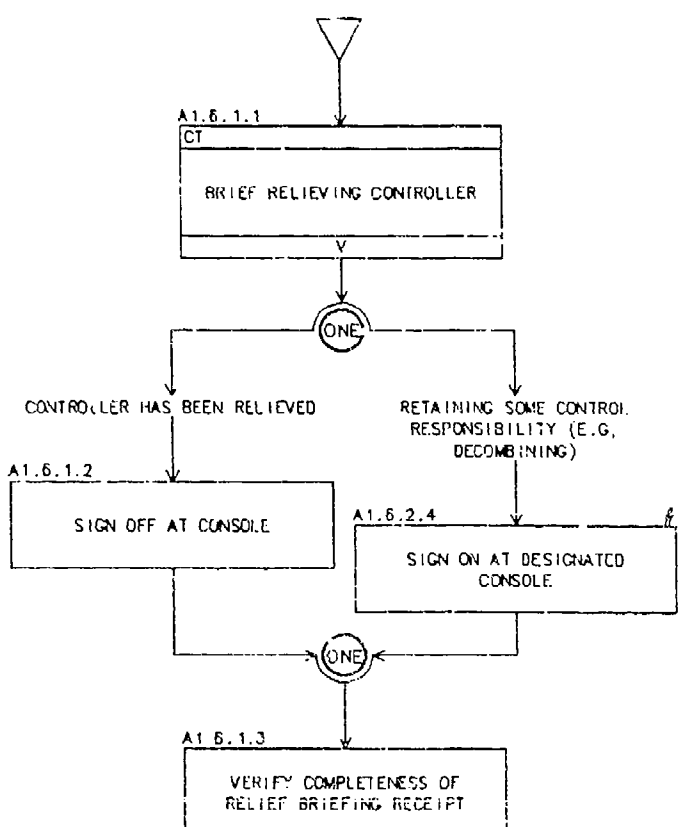

A1.6.2 ASSUMING POSITION RESPONSIBILITY

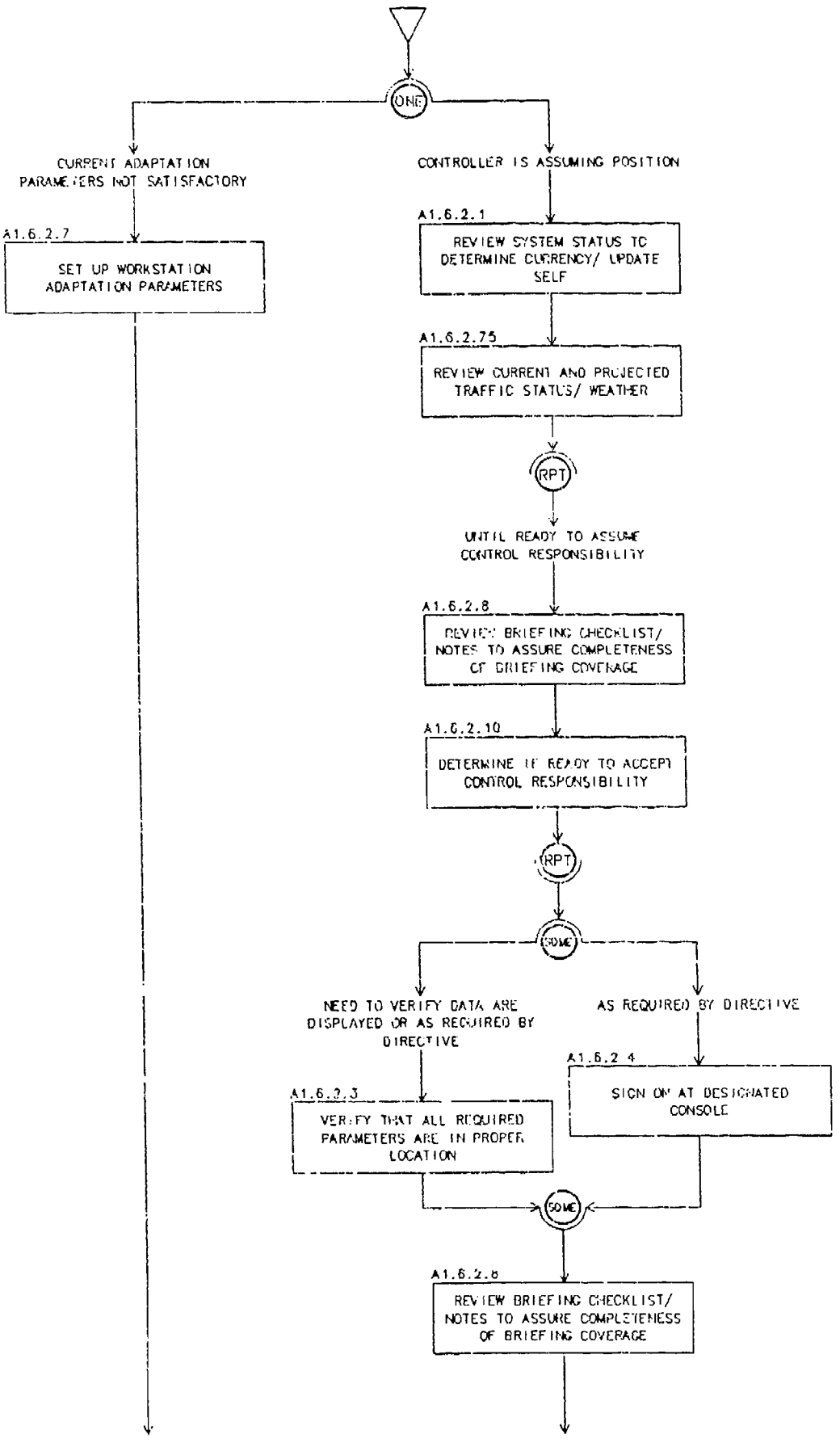

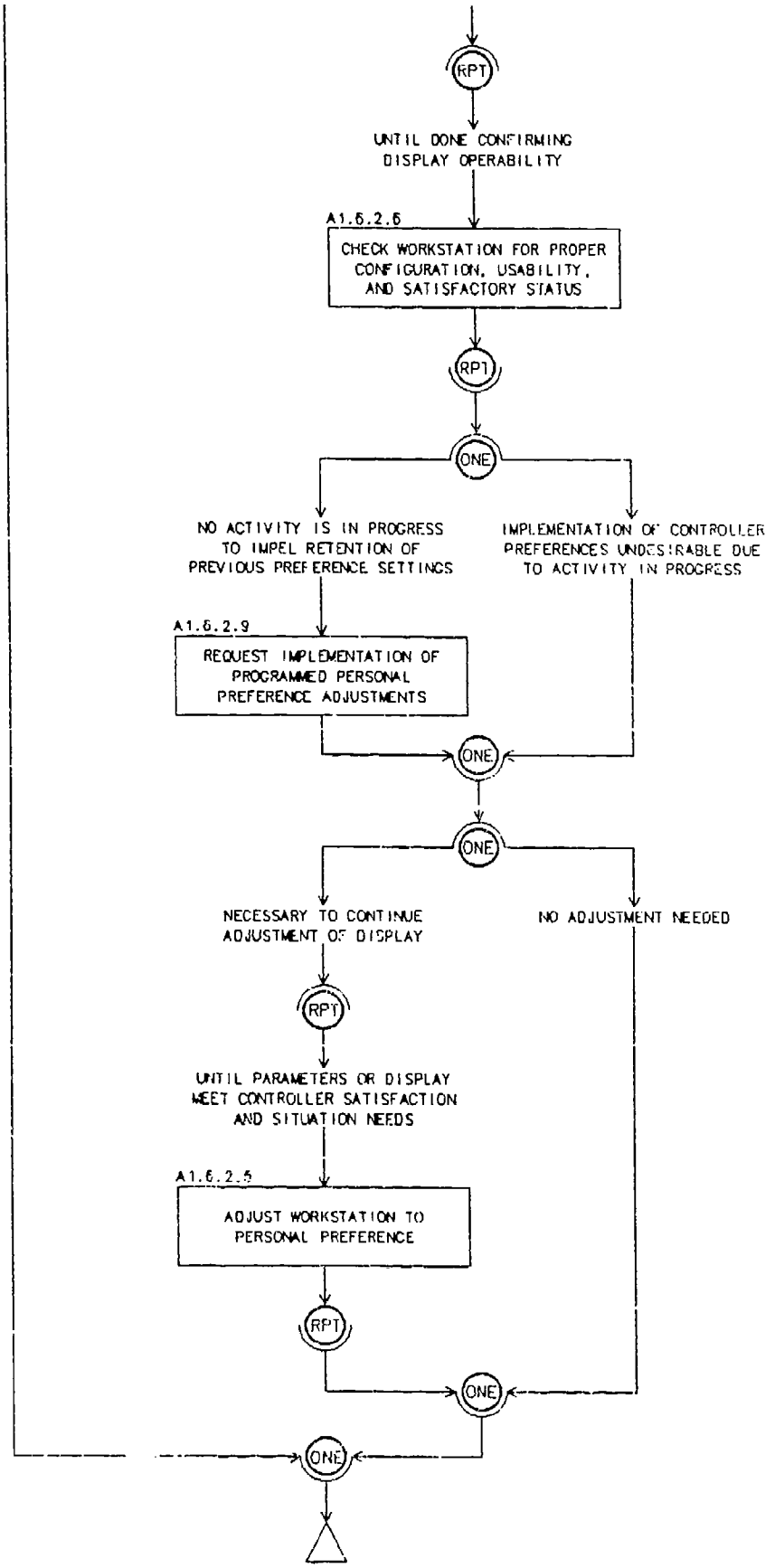
RPT
UNTIL DONE CONFIRMING DISPLAY OPERABILITY
A1.6.2.6
CHECK WORKSTATION FOR PROPER CONFIGURATION, USABILITY, AND SATISFACTORY STATUS
RPT
ONE
NO ACTIVITY IS IN PROGRESS TO IMPEL RETENTION OF PREVIOUS PREFERENCE SETTINGS
IMPLEMENTATION OF CONTROLLER PREFERENCES UNDESIRABLE DUE TO ACTIVITY IN PROGRESS
A1.6.2.9
REQUEST IMPLEMENTATION OF PROGRAMMED PERSONAL PREFERENCE ADJUSTMENTS
ONE
ONE
NECESSARY TO CONTINUE ADJUSTMENT OF DISPLAY
NO ADJUSTMENT NEEDED
RPT
UNTIL PARAMETERS OR DISPLAY MEET CONTROLLER SATISFACTION AND SITUATION NEEDS
A1.6.2.5
ADJUST WORKSTATION TO PERSONAL PREFERENCE
RPT
ONE
ONE

A1.6.3 RESPONDING TO TRANSIENT COMPUTER FAILURES

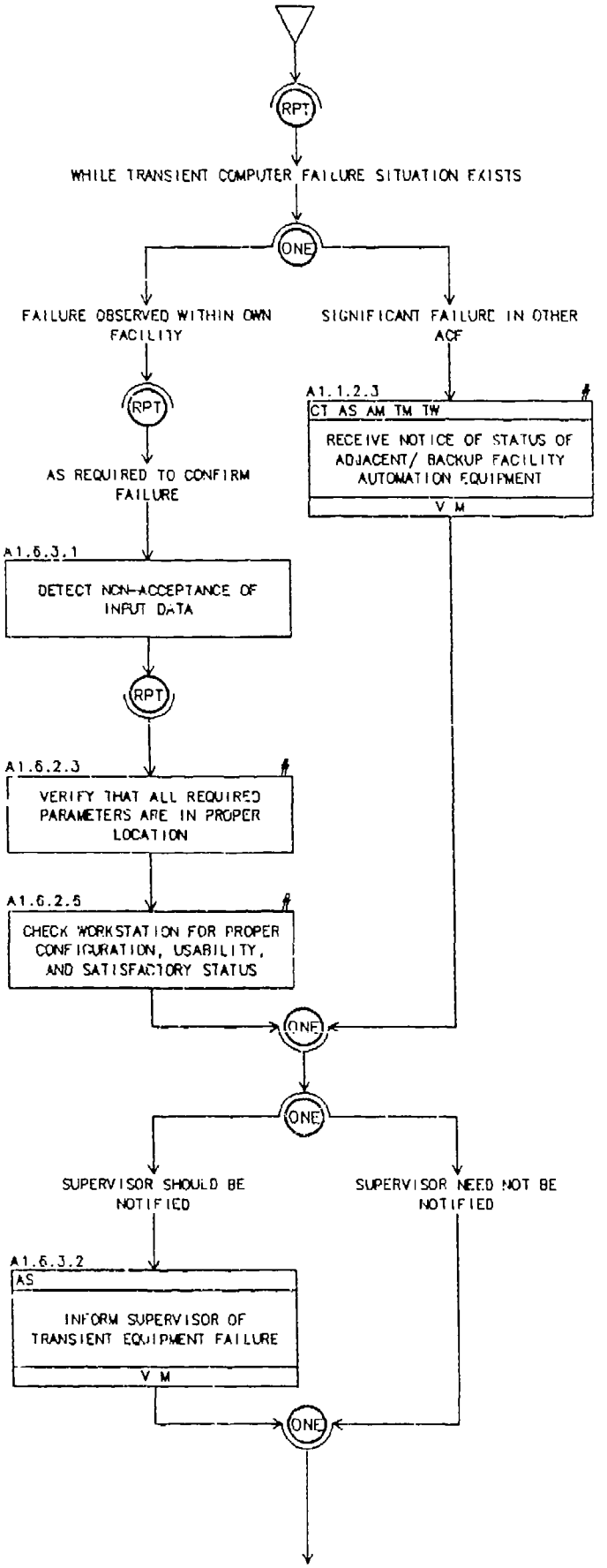

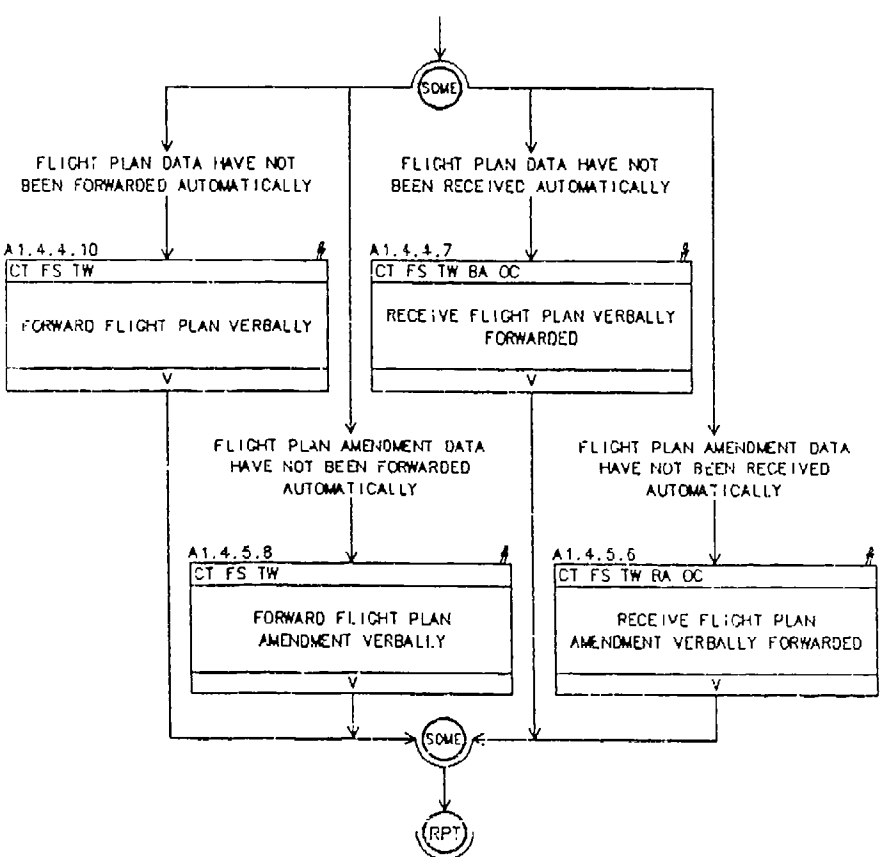
SOME
FLIGHT PLAN DATA HAVE NOT BEEN FORWARDED AUTOMATICALLY
FLIGHT PLAN DATA HAVE NOT BEEN RECEIVED AUTOMATICALLY
A1.4.4.10
CT FS TW
FORWARD FLIGHT PLAN VERBALLY
A1.4.4.7
CT FS TW BA OC
RECEIVE FLIGHT PLAN VERBALLY FORWARDED
FLIGHT PLAN AMENDMENT DATA HAVE NOT BEEN FORWARDED AUTOMATICALLY
FLIGHT PLAN AMENDMENT DATA HAVE NOT BEEN RECEIVED AUTOMATICALLY
A1.4.5.8
CT FS TW
FORWARD FLIGHT PLAN AMENDMENT VERBALLY
A1.4.5.6
CT FS TW RA OC
RECEIVE FLIGHT PLAN AMENDMENT VERBALLY FORWARDED
SOME
RPT

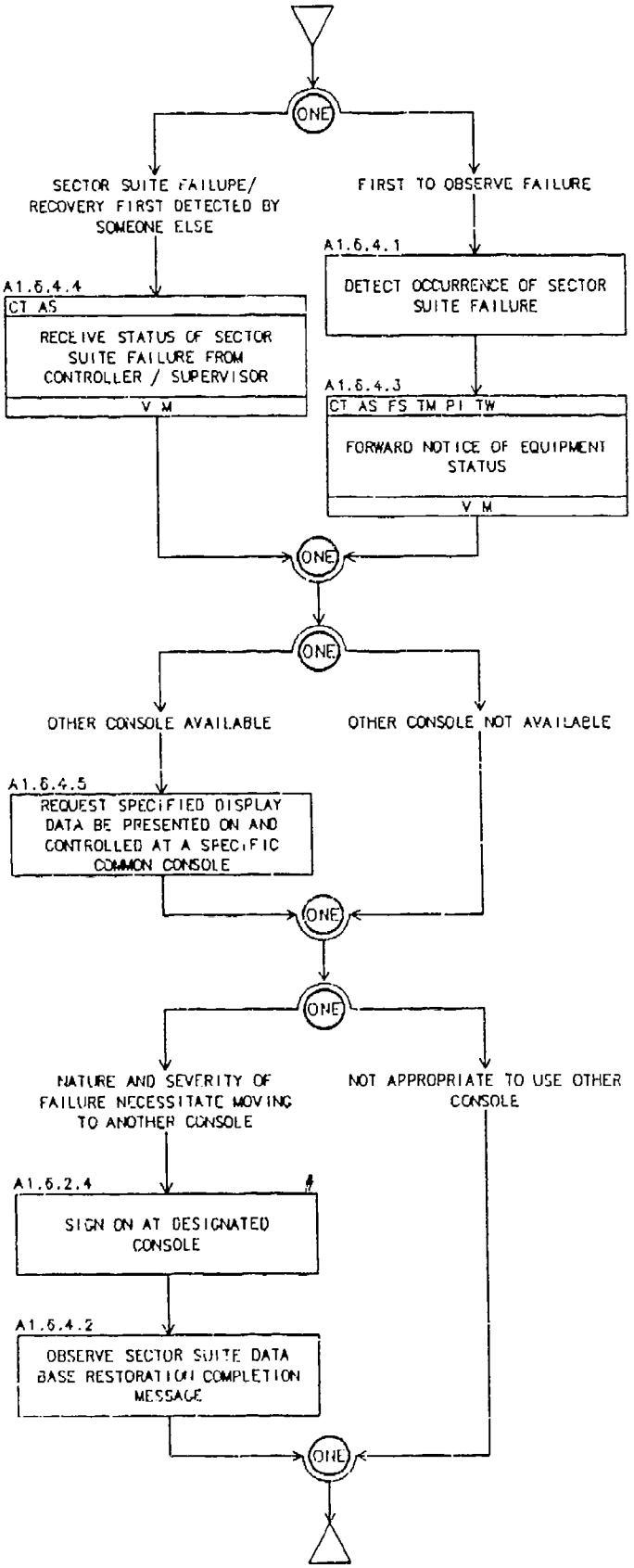
ONE
SECTOR SUITE FAILUPE/ RECOVERY FIRST DETECTED BY SOMEONE ELSE
FIRST TO OBSERVE FAILURE
A1.6.4.1
DETECT OCCURRENCE OF SECTOR SUITE FAILURE
A1.6.4.4
CT AS
RECEIVE STATUS OF SECTOR SUITE FAILURE FROM CONTROLLER / SUPERVISOR
V M
A1.6.4.3
CT AS FS TM PI TW
FORWARD NOTICE OF EQUIPMENT STATUS
V M
ONE
ONE
OTHER CONSOLE AVAILABLE
OTHER CONSOLE NOT AVAILABLE
A1.6.4.5
REQUEST SPECIFIED DISPLAY DATA BE PRESENTED ON AND CONTROLLED AT A SPECIFIC COMMON CONSOLE
ONE
ONE
NATURE AND SEVERITY OF FAILURE NECESSITATE MOVING TO ANOTHER CONSOLE
NOT APPROPRIATE TO USE OTHER CONSOLE
A1.6.2.4
SIGN ON AT DESIGNATED CONSOLE
A1.6.4.2
OBSERVE SECTOR SUITE DATA BASE RESTORATION COMPLETION MESSAGE
ONE

A1.6.5 EXECUTING BACKUP PROCEDURES FOR TAAS FAILURES

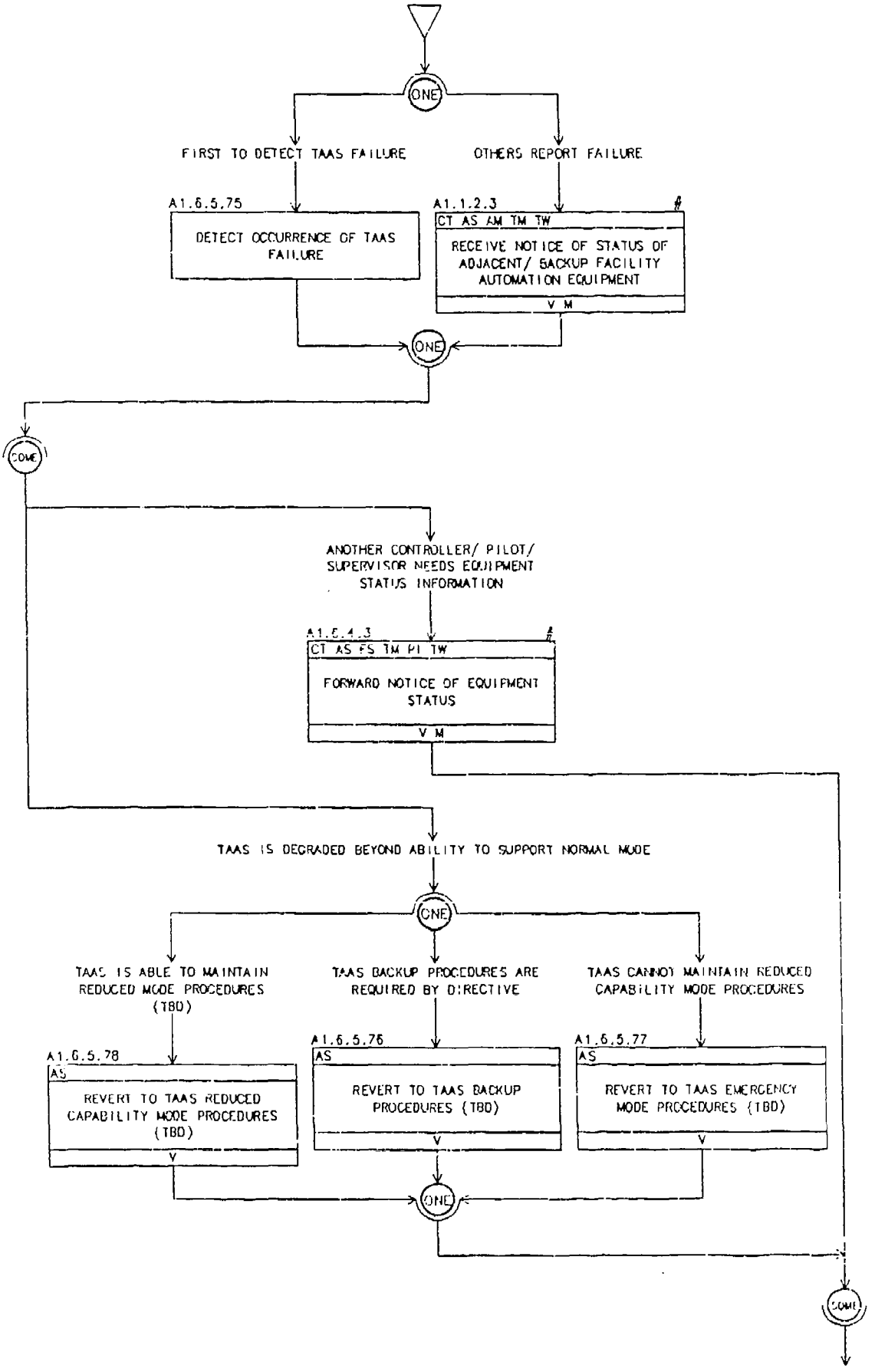

A1.6.5 EXECUTING BACKUP PROCEDURES FOR TAAS FAILURES (cont.)

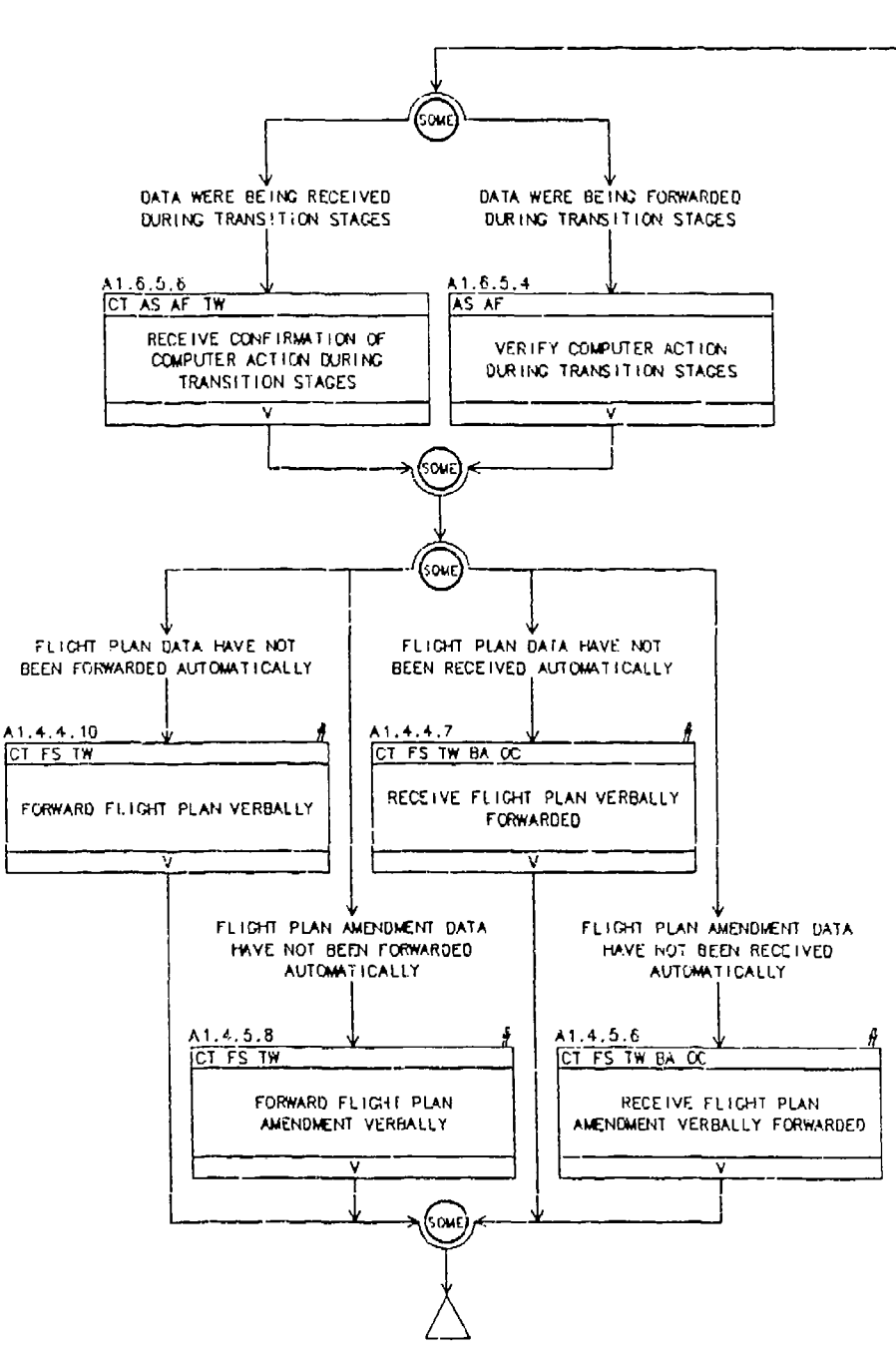

A1.6.6 EXECUTING BACKUP NAVAID PROCEDURES

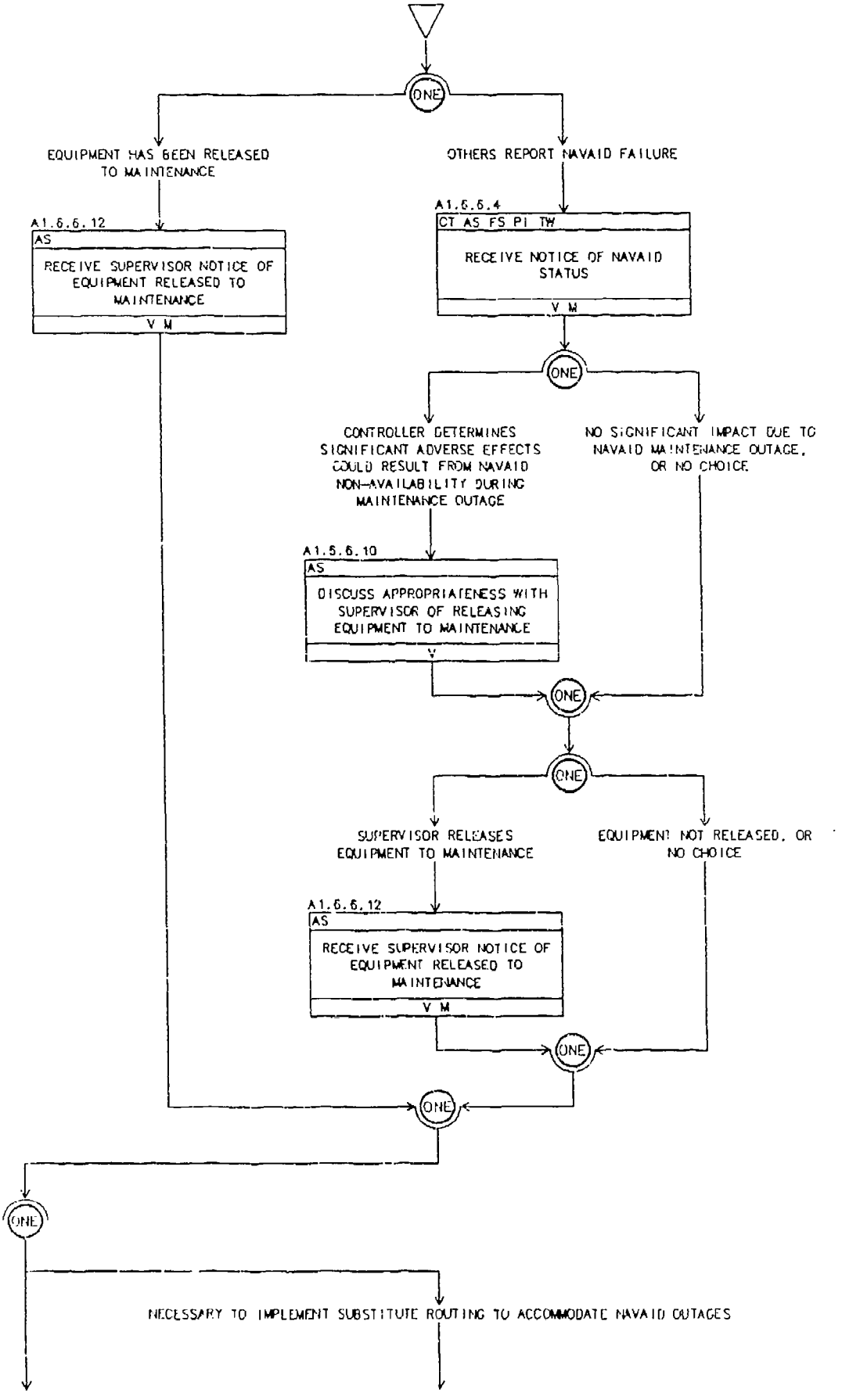

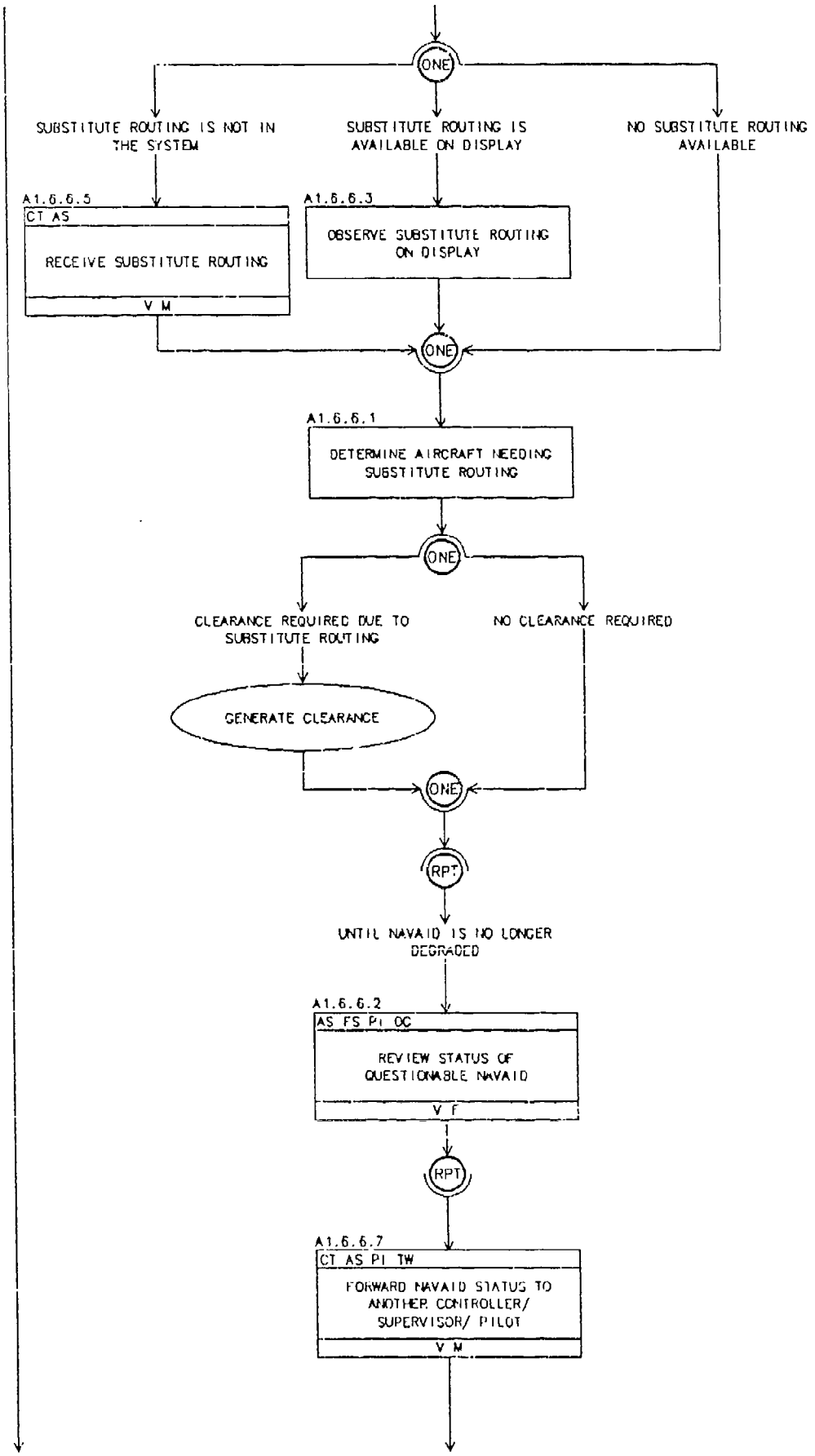
ONE
SUBSTITUTE ROUTING IS NOT IN THE SYSTEM
SUBSTITUTE ROUTING IS AVAILABLE ON DISPLAY
NO SUBSTITUTE ROUTING AVAILABLE
A1.6.6.5
CT AS
RECEIVE SUBSTITUTE ROUTING
V M
A1.6.6.3
OBSERVE SUBSTITUTE ROUTING ON DISPLAY
ONE
A1.6.6.1
DETERMINE AIRCRAFT NEEDING SUBSTITUTE ROUTING
ONE
CLEARANCE REQUIRED DUE TO SUBSTITUTE ROUTING
NO CLEARANCE REQUIRED
GENERATE CLEARANCE
ONE
RPT
UNTIL NAVAID IS NO LONGER DEGRADED
A1.6.6.2
AS FS PI OC
REVIEW STATUS OF QUESTIONABLE NAVAID
V F
RPT
A1.6.6.7
CT AS PI TW
FORWARD NAVAID STATUS TO ANOTHER CONTROLLER/ SUPERVISOR/ PILOT
V M

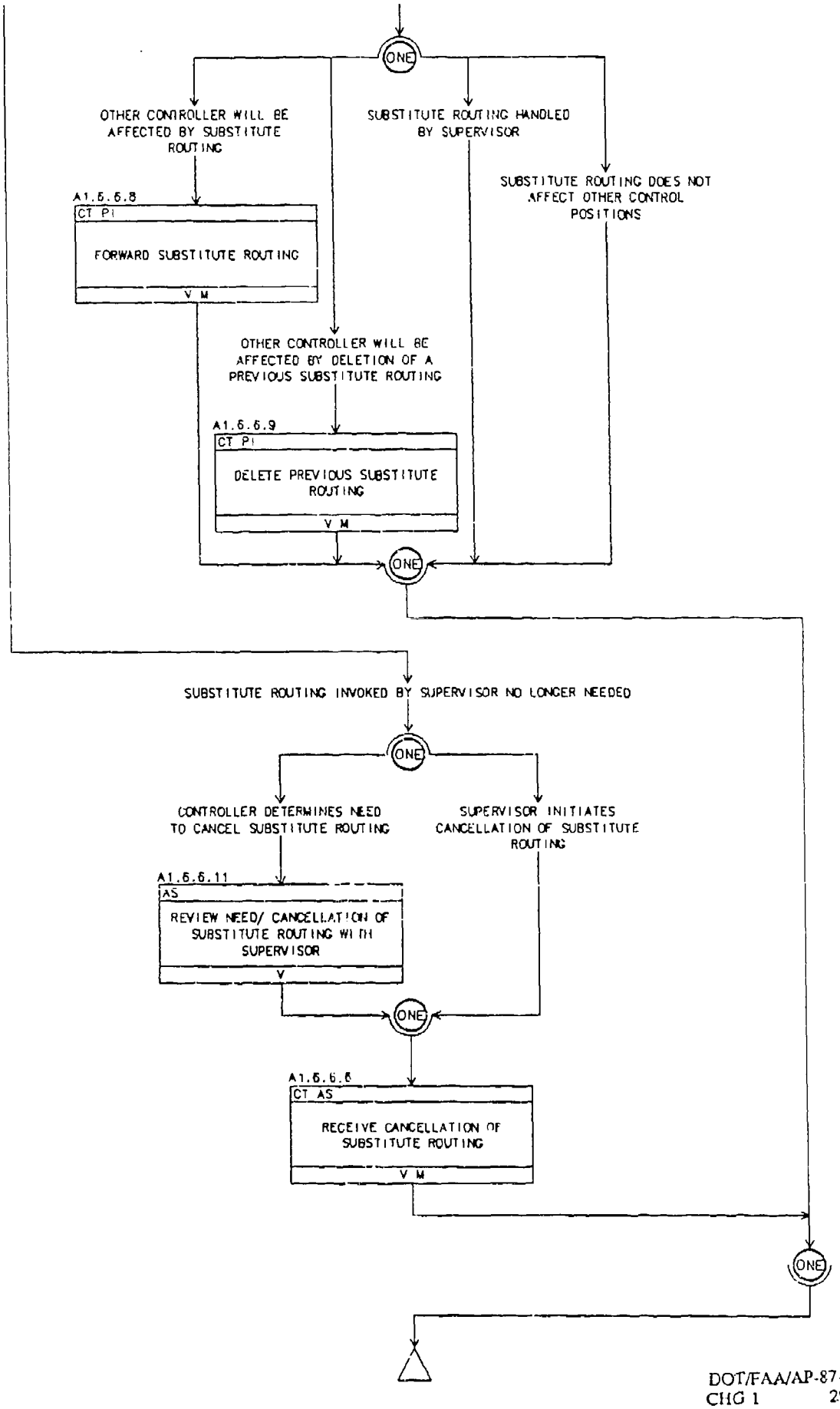
ONE
OTHER CONTROLLER WILL BE AFFECTED BY SUBSTITUTE ROUTING
SUBSTITUTE ROUTING HANDLED BY SUPERVISOR
SUBSTITUTE ROUTING DOES NOT AFFECT OTHER CONTROL POSITIONS
A1.6.6.8
CT P1
FORWARD SUBSTITUTE ROUTING
V M
OTHER CONTROLLER WILL BE AFFECTED BY DELETION OF A PREVIOUS SUBSTITUTE ROUTING
A1.6.6.9
CT P1
DELETE PREVIOUS SUBSTITUTE ROUTING
V M
ONE
SUBSTITUTE ROUTING INVOKED BY SUPERVISOR NO LONGER NEEDED
ONE
CONTROLLER DETERMINES NEED TO CANCEL SUBSTITUTE ROUTING
SUPERVISOR INITIATES CANCELLATION OF SUBSTITUTE ROUTING
A1.6.6.11
AS
REVIEW NEED/ CANCELLATION OF SUBSTITUTE ROUTING WITH SUPERVISOR
V
ONE
A1.6.6.6
CT AS
RECEIVE CANCELLATION OF SUBSTITUTE ROUTING
V M
ONE

A1.6.7 EXECUTING BACKUP PROCEDURES FOR COMMUNICATION FAILURES

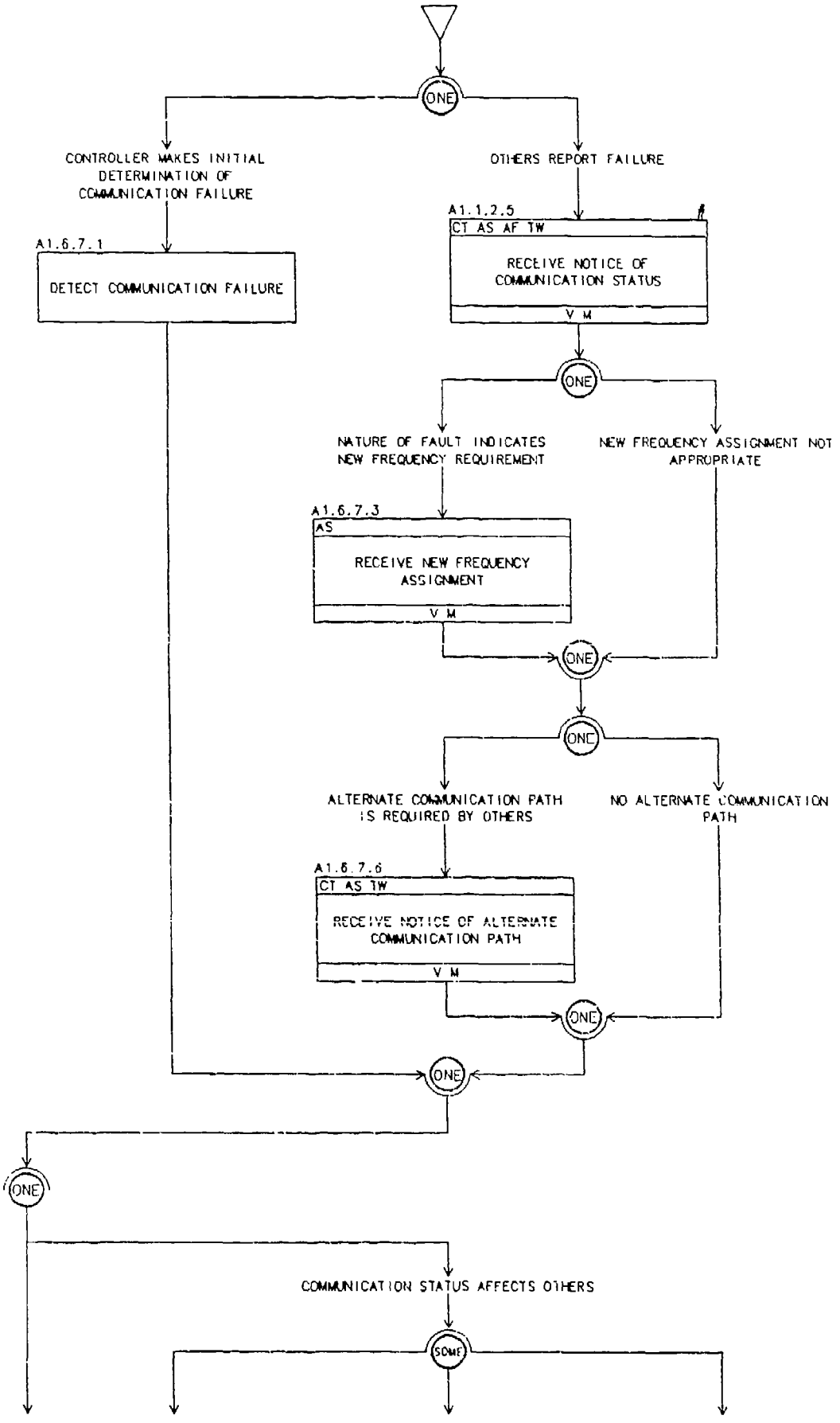

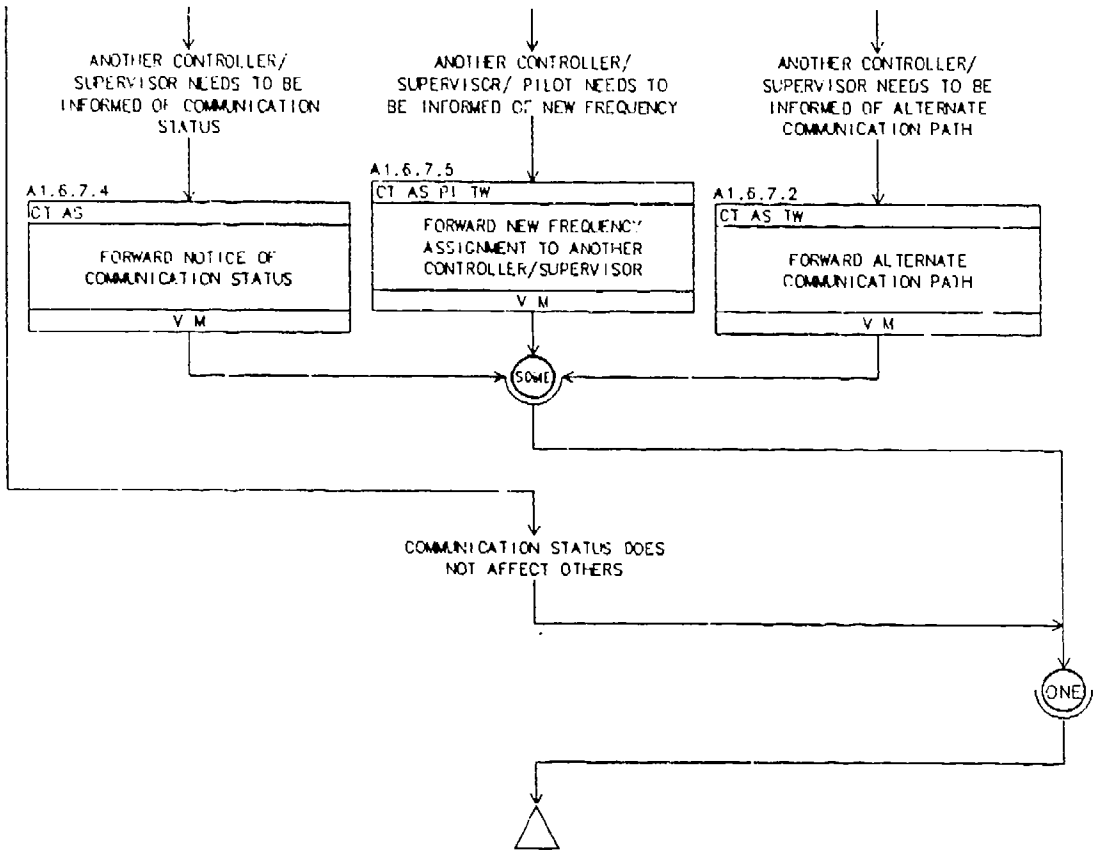
ANOTHER CONTROLLER/ SUPERVISOR NEEDS TO BE INFORMED OF COMMUNICATION STATUS
ANOTHER CONTROLLER/ SUPERVISOR/ PILOT NEEDS TO BE INFORMED OF NEW FREQUENCY
ANOTHER CONTROLLER/ SUPERVISOR NEEDS TO BE INFORMED OF ALTERNATE COMMUNICATION PATH
A1.6.7.4
CT AS
FORWARD NOTICE OF COMMUNICATION STATUS
V M
A1.6.7.5
CT AS PI TW
FORWARD NEW FREQUENCY ASSIGNMENT TO ANOTHER CONTROLLER/SUPERVISOR
V M
A1.6.7.2
CT AS TW
FORWARD ALTERNATE COMMUNICATION PATH
V M
SOME
COMMUNICATION STATUS DOES NOT AFFECT OTHERS
ONE

A1.6.8 MANAGING PERSONAL WORKLOAD

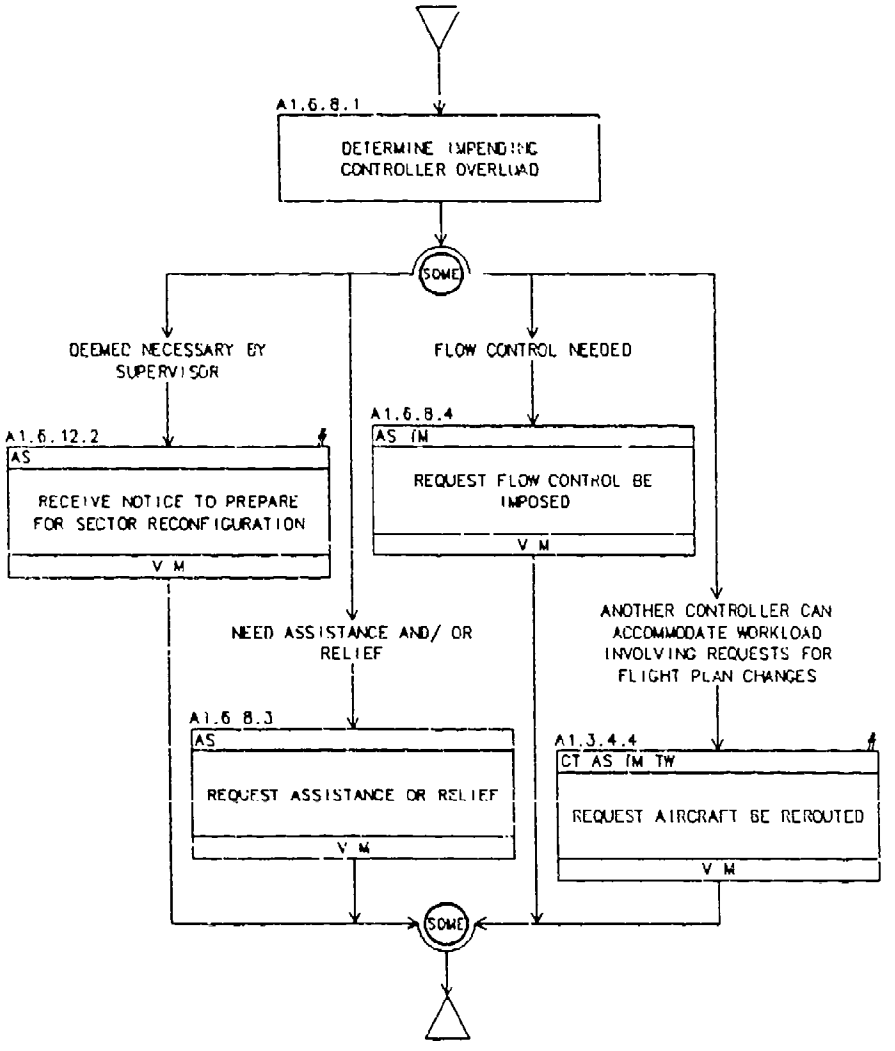

A1.6.9 PERFORMING PROCEDURES FOR NON-RADAR ENVIRONMENT

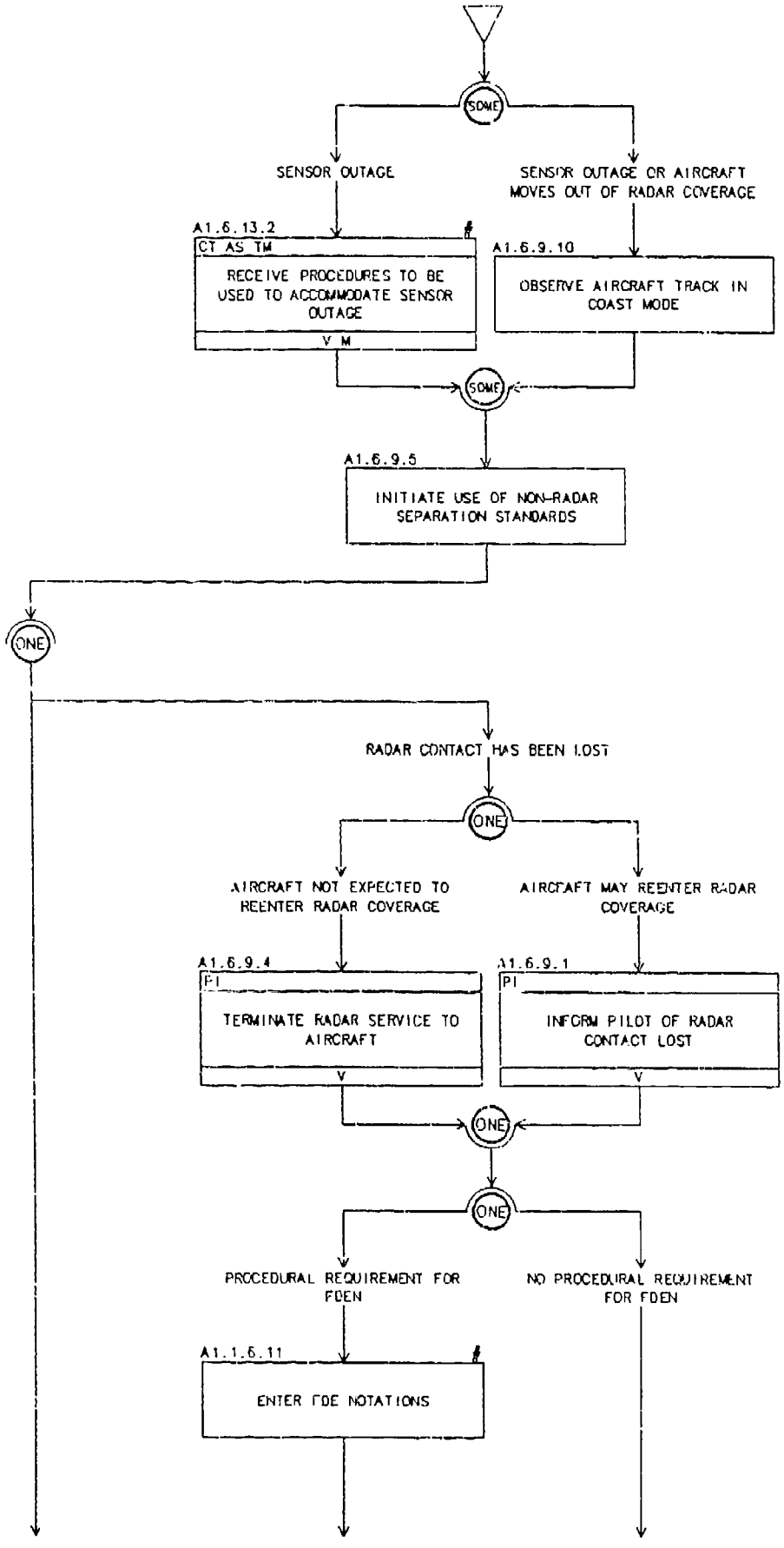

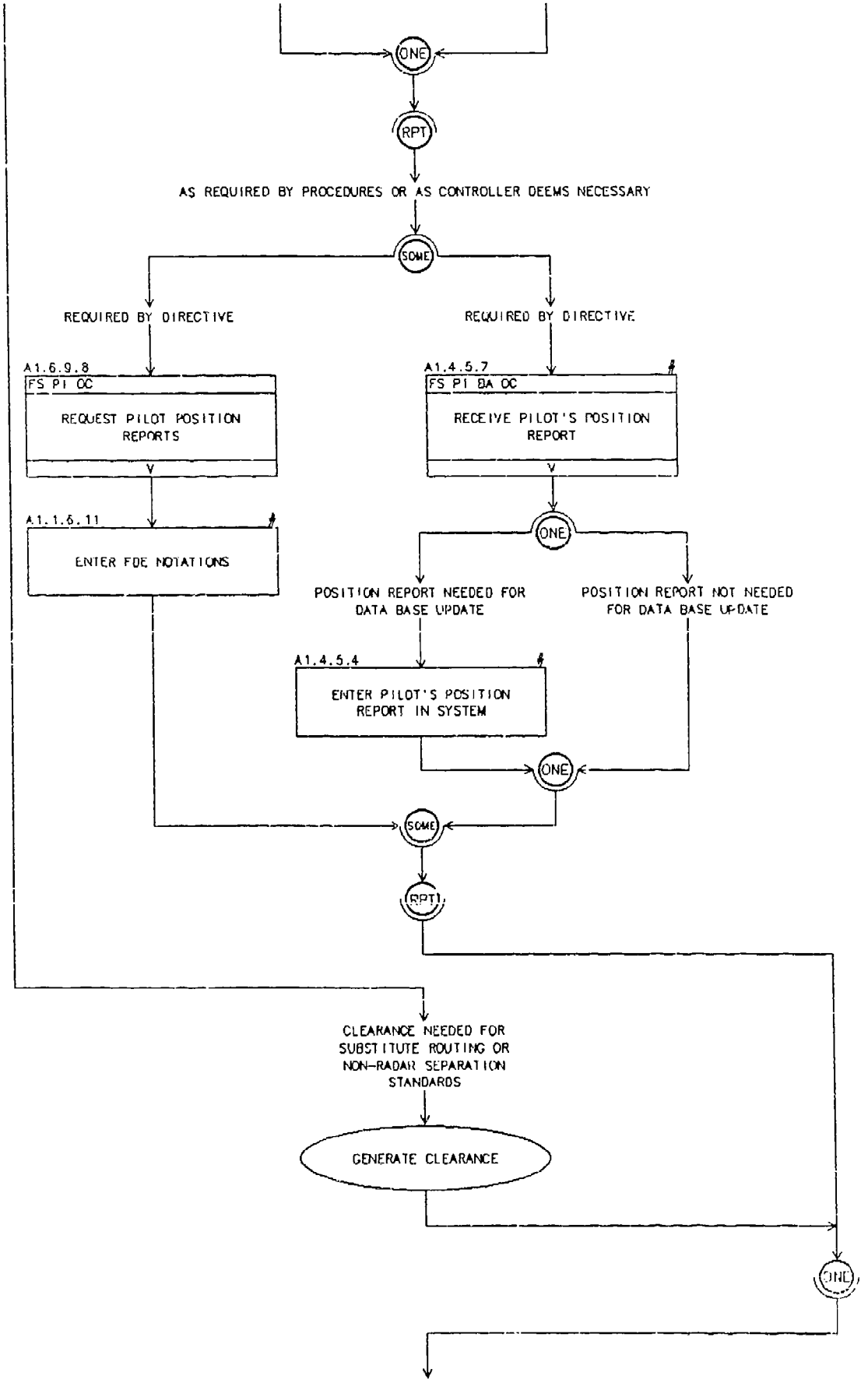
ONE
RPT
AS REQUIRED BY PROCEDURES OR AS CONTROLLER DEEMS NECESSARY
SOME
REQUIRED BY DIRECTIVE
REQUIRED BY DIRECTIVE
A1.6.9.8
FS P1 OC
REQUEST PILOT POSITION REPORTS
A1.4.5.7
FS P1 BA OC
RECEIVE PILOT'S POSITION REPORT
A1.1.6.11
ENTER FDE NOTATIONS
ONE
POSITION REPORT NEEDED FOR DATA BASE UPDATE
POSITION REPORT NOT NEEDED FOR DATA BASE UPDATE
A1.4.5.4
ENTER PILOT'S POSITION REPORT IN SYSTEM
ONE
SOME
RPT1
CLEARANCE NEEDED FOR SUBSTITUTE ROUTING OR NON-RADAR SEPARATION STANDARDS
GENERATE CLEARANCE
ONE

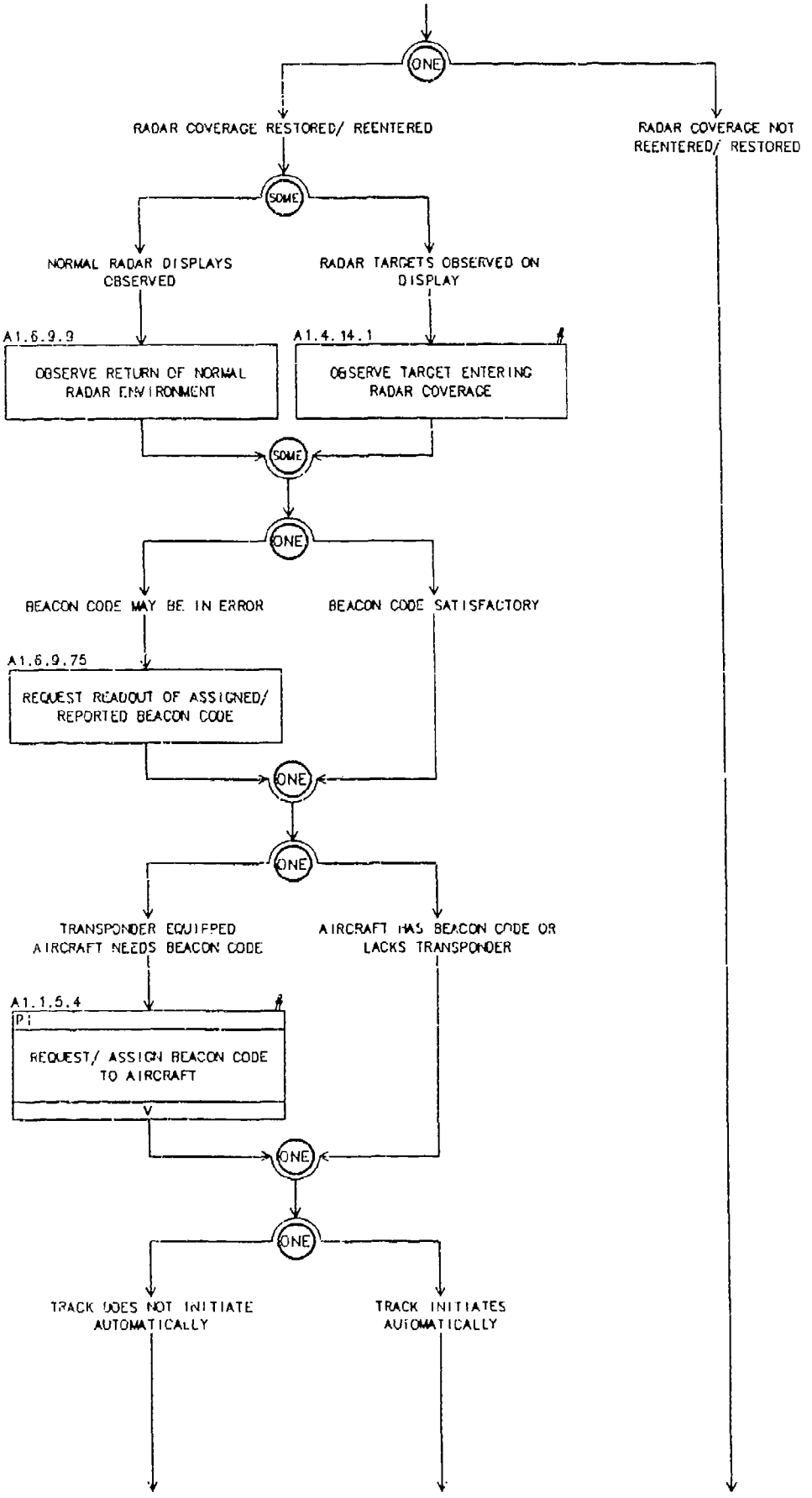
ONE
RADAR COVERAGE RESTORED/ REENTERED
RADAR COVERAGE NOT REENTERED/ RESTORED
SOME
NORMAL RADAR DISPLAYS OBSERVED
RADAR TARGETS OBSERVED ON DISPLAY
A1.6.9.9
OBSERVE RETURN OF NORMAL RADAR ENVIRONMENT
A1.4.14.1
OBSERVE TARGET ENTERING RADAR COVERAGE
SOME
ONE
BEACON CODE MAY BE IN ERROR
BEACON CODE SATISFACTORY
A1.6.9.75
REQUEST READOUT OF ASSIGNED/ REPORTED BEACON CODE
ONE
ONE
TRANSPONDER EQUIPPED AIRCRAFT NEEDS BEACON CODE
AIRCRAFT HAS BEACON CODE OR LACKS TRANSPONDER
A1.1.5.4
P:
REQUEST/ ASSIGN BEACON CODE TO AIRCRAFT
ONE
ONE
TRACK DOES NOT INITIATE AUTOMATICALLY
TRACK INITIATES AUTOMATICALLY

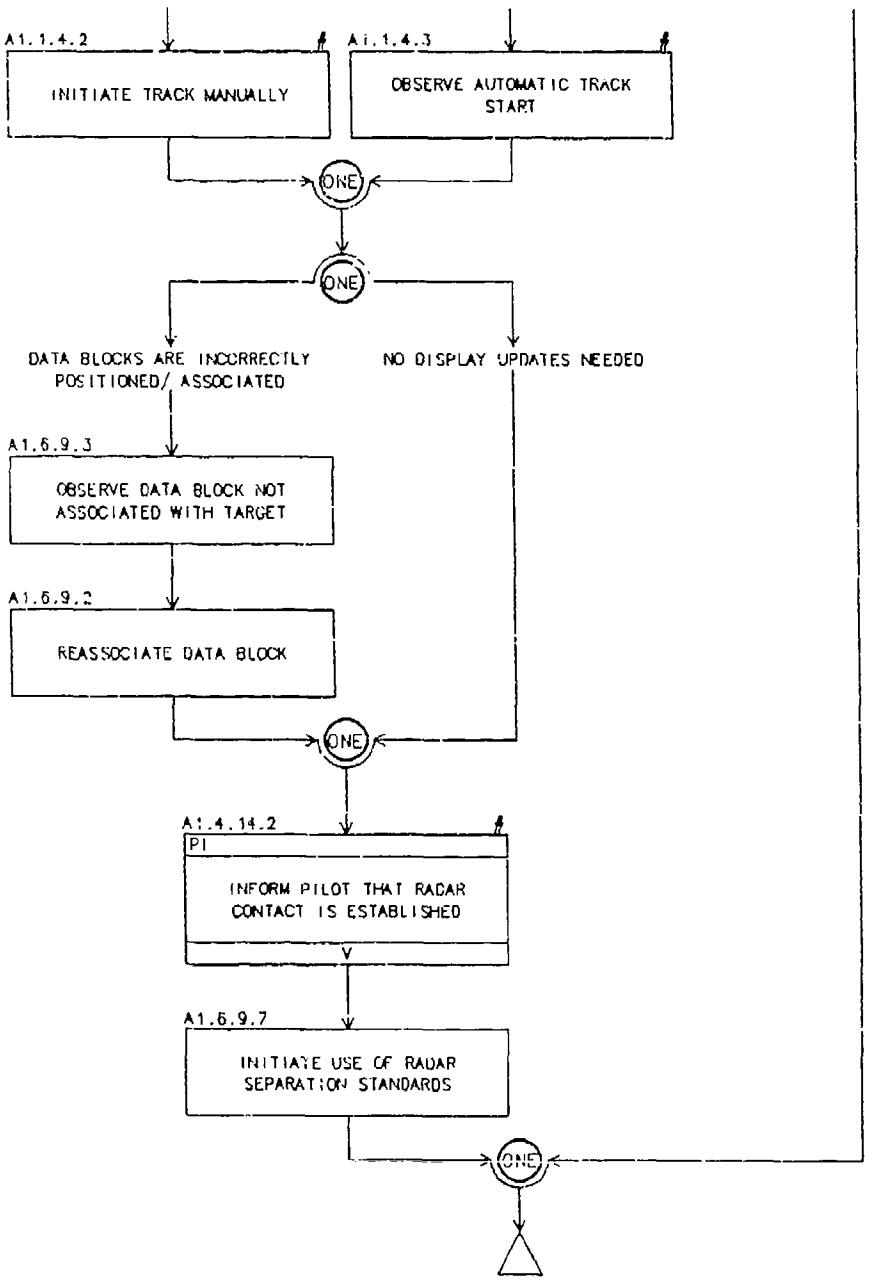
A1.1.4.2
INITIATE TRACK MANUALLY
A1.1.4.3
OBSERVE AUTOMATIC TRACK START
ONE
ONE
DATA BLOCKS ARE INCORRECTLY POSITIONED/ ASSOCIATED
NO DISPLAY UPDATES NEEDED
A1.6.9.3
OBSERVE DATA BLOCK NOT ASSOCIATED WITH TARGET
A1.6.9.2
REASSOCIATE DATA BLOCK
ONE
A1.4.14.2
PI
INFORM PILOT THAT RADAR CONTACT IS ESTABLISHED
A1.6.9.7
INITIATE USE OF RADAR SEPARATION STANDARDS
ONE

A1.6.10 EXECUTING BACKUP PROCEDURES FOR LOSS OF FLIGHT PLAN DATA BASE

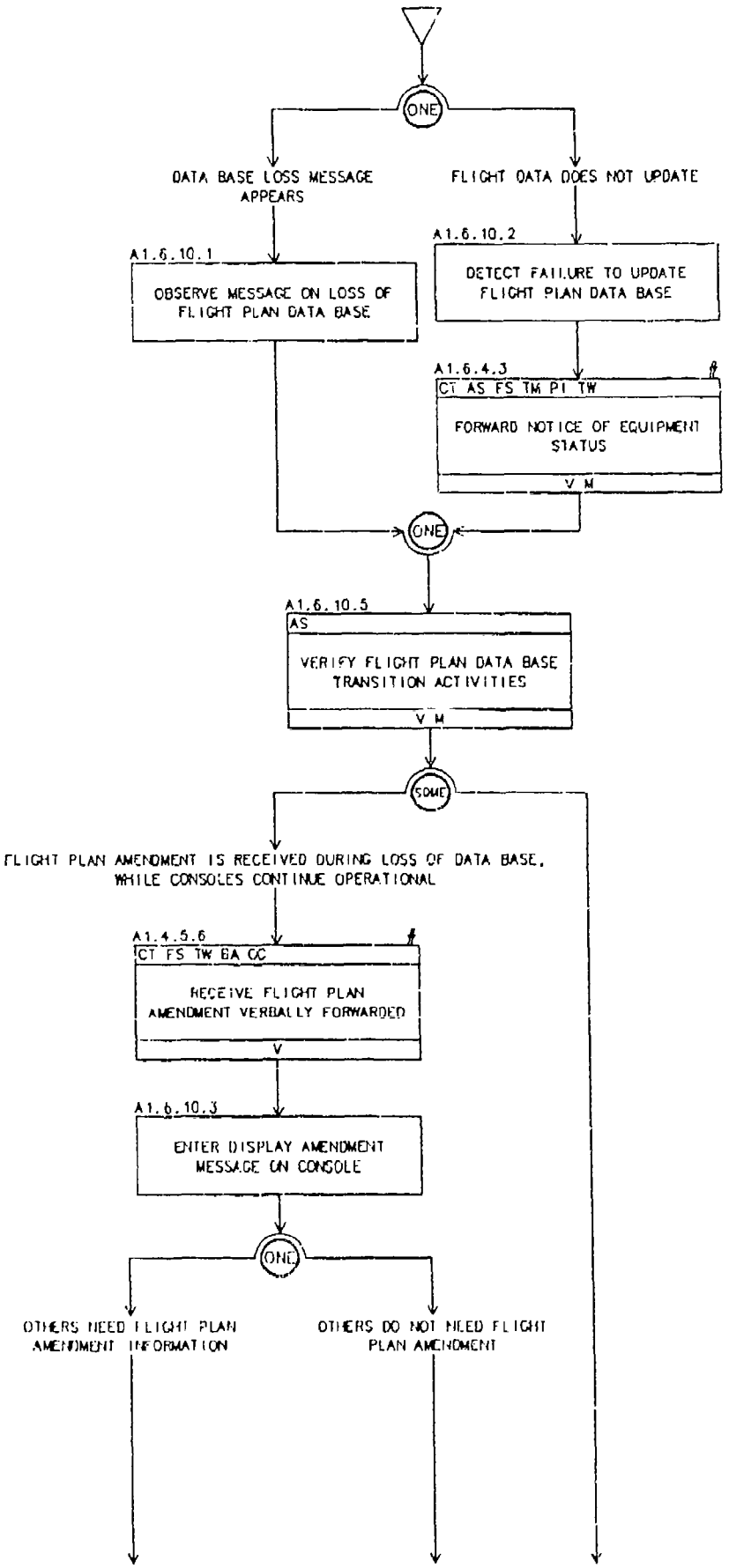

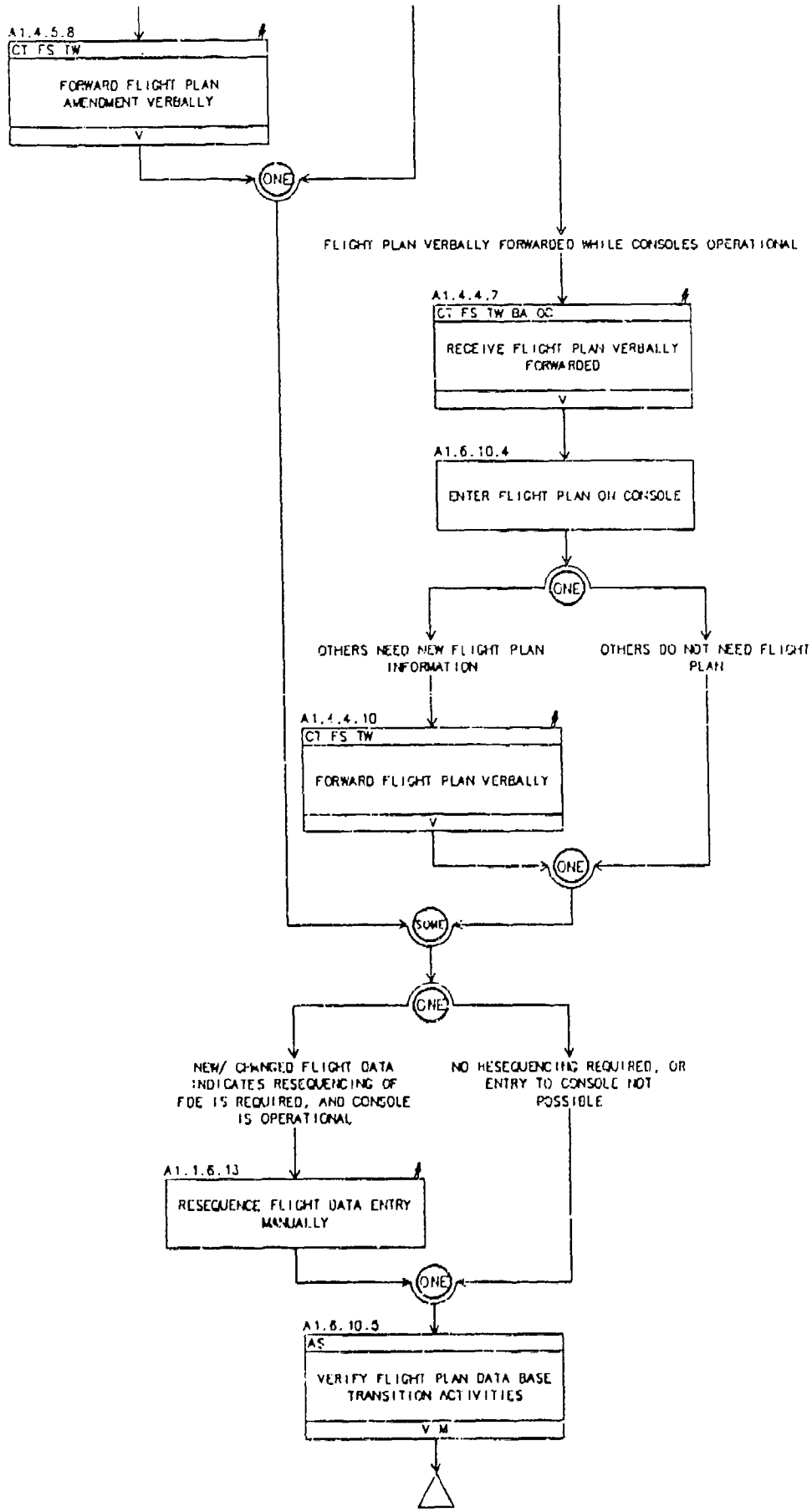
A1.4.5.8
CT FS TW
FORWARD FLIGHT PLAN AMENDMENT VERBALLY
V
ONE
FLIGHT PLAN VERBALLY FORWARDED WHILE CONSOLES OPERATIONAL
A1.4.4.7
CT FS TW BA OC
RECEIVE FLIGHT PLAN VERBALLY FORWARDED
V
A1.6.10.4
ENTER FLIGHT PLAN ON CONSOLE
ONE
OTHERS NEED NEW FLIGHT PLAN INFORMATION
OTHERS DO NOT NEED FLIGHT PLAN
A1.4.4.10
CT FS TW
FORWARD FLIGHT PLAN VERBALLY
V
ONE
SOME
ONE
NEW/ CHANGED FLIGHT DATA INDICATES RESEQUENCING OF FDE IS REQUIRED, AND CONSOLE IS OPERATIONAL
NO RESEQUENCING REQUIRED, OR ENTRY TO CONSOLE NOT POSSIBLE
A1.1.6.13
RESEQUENCE FLIGHT DATA ENTRY MANUALLY
ONE
A1.6.10.5
AS
VERIFY FLIGHT PLAN DATA BASE TRANSITION ACTIVITIES
V M

A1.6.11 RESPONDING TO TRANSIENT VSCS FAILURES

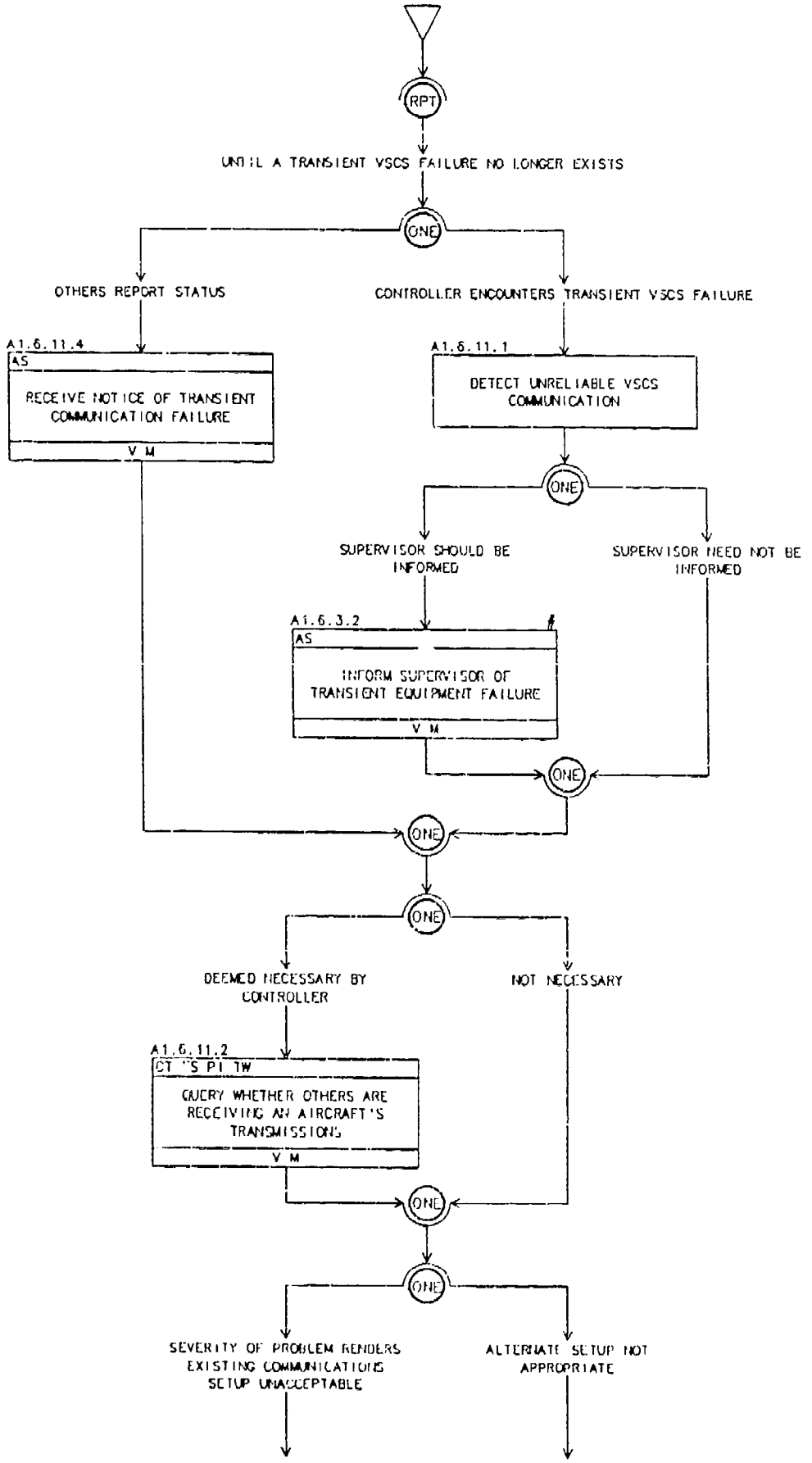

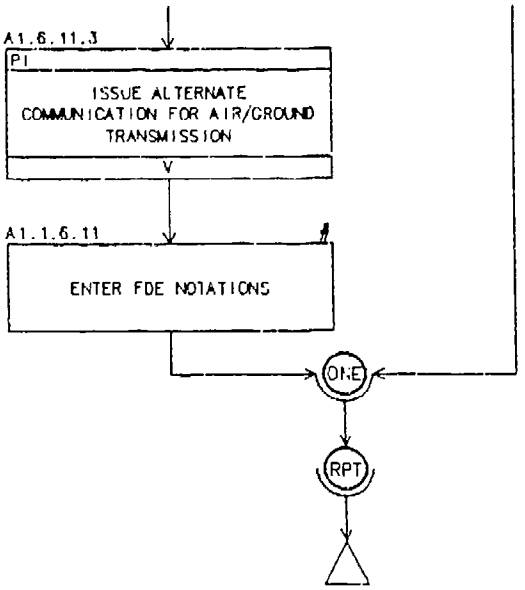
A1.6.11.3
PI
ISSUE ALTERNATE COMMUNICATION FOR AIR/GROUND TRANSMISSION
A1.1.6.11
ENTER FDE NOTATIONS
ONE
RPT

A1.6.12 RESPONDING TO AIRSPACE RECONFIGURATIONS/ RESECTORIZATIONS .

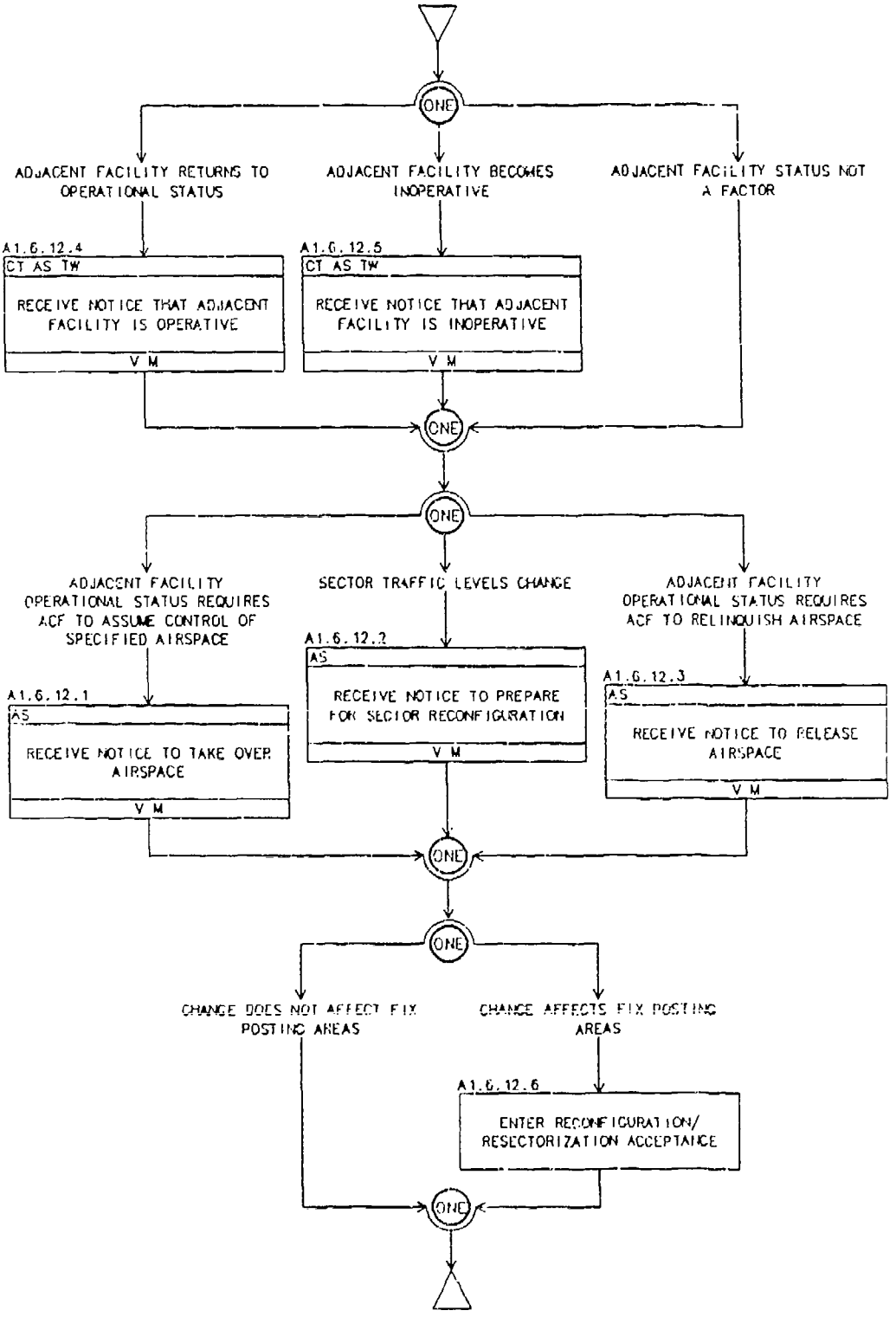

A1.6.13 RESPONDING TO SENSOR OUTAGES

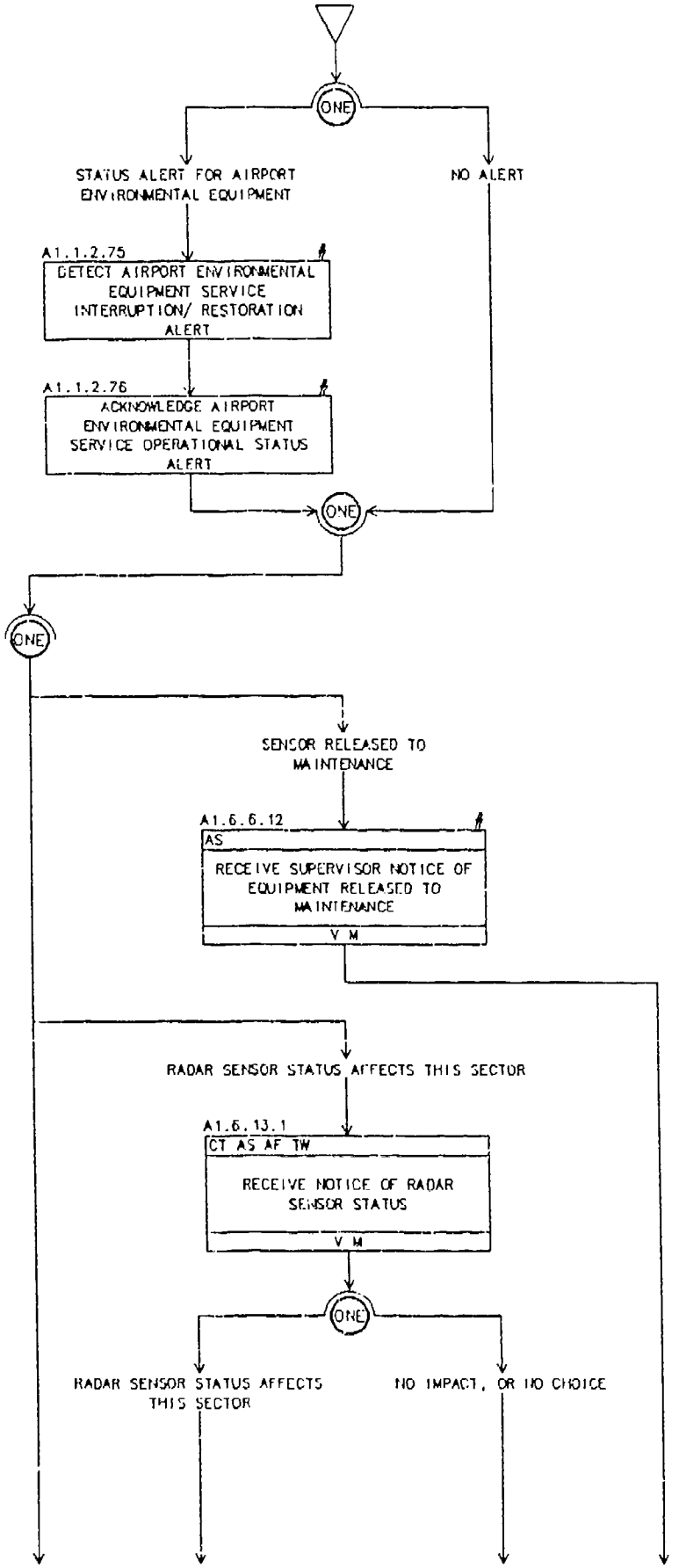

A1.6.13 RESPONDING TO SENSOR OUTAGES (cont.)

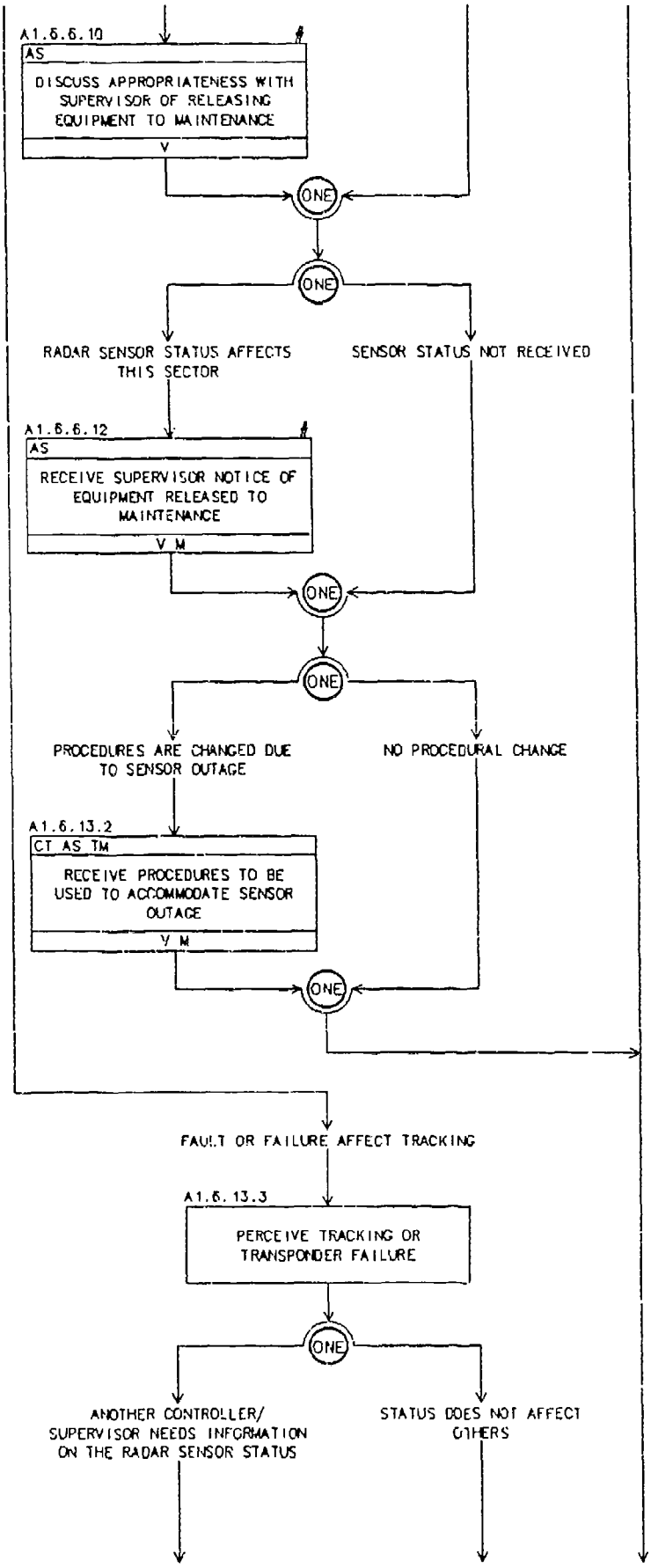

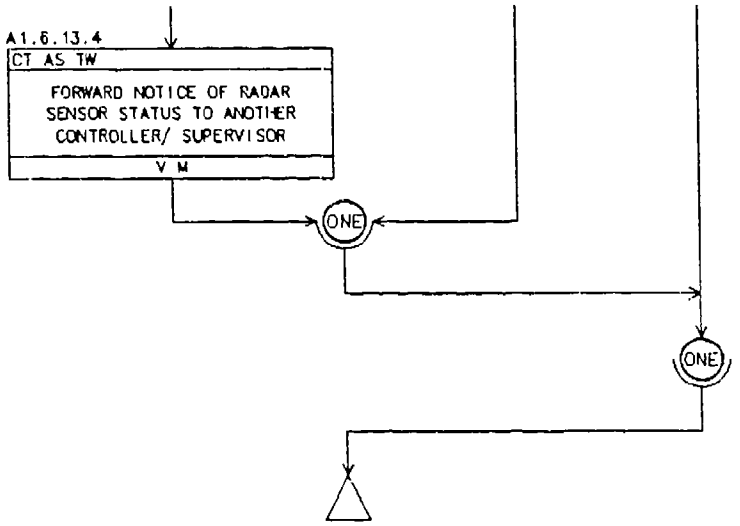
A1.6.13.4
CT AS TW
FORWARD NOTICE OF RADAR SENSOR STATUS TO ANOTHER CONTROLLER/ SUPERVISOR
V M
ONE
ONE

APPENDIX B

TASK STATEMENTS AND EVENT TO SUB-ACTIVITY TRACE

This appendix is composed of two sections:

1. **Task Statements** - consisting of a list of the 369 TAAS terminal controller tasks. The following summarizes the components of the Task Statements table:

   Task Number - assigned number of each task statement.

   Task Statement - concise statement of the task to be performed.

   Coordination Media - coordination media may be one of three types: Voice (V), Function (F), and Message (M). Automated Coordination is reserved for AERA 2 and 3 use.

   Coordinatees - designates the position/ agency contacted during coordination.

   Transition State - indicates the AAS transition states for which the task is applicable - ISSS, TAAS, ACCC, AERA 1. AERA 2 and 3 reserved for future use.

   Revision Date - indicates the date of last revision for each task.

2. ***Deleted***

3. **Event to Sub-Activity Trace** - noting the relation of ATC events (from Appendix A of Volume I) to each TAAS terminal controller sub-activity graphed in Appendix A of this volume.

TASK STATEMENTS

Task Number	Task Statement	Coordination Media: Voice	Function	Mail	Automated Coord.	Coordinatees: ISSS\TAAS Controller	Area Supervisor	Area Manager	Flight Service	Traffic Management	Mission Coordinator	Airway Facility/DSC	Meteorologist	Pilot	Tower Controller/Sup	Central Flow Control	Aeronautical Radio	Base Operations	Other Coordination	Transition State: ISSS	TAAS	ACCC	AERA 1	AERA 2	AERA 3	Revision Date
A1.0	PERFORM TAAS DOMESTIC AIR TRAFFIC CONTROL																				X					06/23/87
A1.0.0.0	GENERATE CLEARANCE																			X	X	X	X			04/22/87
A1.1	PERFORM SITUATION MONITORING																			X	X	X	X			04/22/87
A1.1.1	CHECKING AND EVALUATING SEPARATION																			X	X	X	X			04/22/87
A1.1.1.1	REVIEW FLIGHT DATA DISPLAY FOR PRESENT AND/OR FUTURE AIRCRAFT SEPARATION																			X	X	X	X			04/22/87
A1.1.1.2	REVIEW SITUATION DISPLAY FOR POTENTIAL VIOLATION OF AIRCRAFT SEPARATION STANDARDS																			X	X	X	X			04/22/87
A1.1.1.4	PROJECT MENTALLY AN AIRCRAFT'S FUTURE POSITION/ ALTITUDE/ PATH																			X	X	X	X			05/04/87
A1.1.1.6	FORCE/ QUICK LOOK FULL DATA BLOCK(S) TO EXAMINE TRACK INFORMATION ON AIRCRAFT																			X	X	X	X			07/11/88
A1.1.1.7	DETERMINE WHETHER AIRCRAFT MAY BE SEPARATED BY LESS THAN PRESCRIBED MINIMA																			X	X	X	X			04/22/87
A1.1.1.8	SELECT FDE SORTING PRIORITY SCHEME																			X	X	X	X			04/22/87
A1.1.1.9	OBSERVE TRACK VELOCITY/ DISTANCE VECTOR TO PROJECT AIRCRAFT MOVEMENT																			X	X	X	X			04/22/87
A1.1.1.12	REVIEW SITUATION DISPLAY FOR POTENTIAL VIOLATION OF AIRSPACE SEPARATION STANDARDS																			X	X	X	X			04/22/87
A1.1.1.14	REVIEW SITUATION DISPLAY FOR POTENTIAL VIOLATION OF CONFORMANCE CRITERIA																			X	X	X	X			04/22/87
A1.1.1.15	DETERMINE WHETHER AIRSPACE SEPARATION STANDARDS MAY BE VIOLATED																			X	X	X	X			04/22/87
A1.1.1.17	DETERMINE WHETHER FLOW RESTRICTIONS MAY BE VIOLATED																			X	X	X	X			04/22/87
A1.1.1.75	REVIEW DISPLAYS FOR POTENTIAL VIOLATION OF FLOW RESTRICTIONS																				X					06/23/87
A1.1.1.76	REQUEST BEACON CODE/ MODE C/ GROUND SPEED READOUT OF UNASSOCIATED TARGET																				X					07/11/88

TASK STATEMENTS

Task Number	Task Statement	Coordination Media				Coordinatees																																	Transition State						Revision Date
		Voice		Function		Mail		Automated Coord.		ISSS\TAAS Controller		Area Supervisor		Area Manager		Flight Service		Traffic Management		Mission Coordinator		Airway Facility/DSC		Meteorologist		Pilot		Tower Controller/Sup		Central Flow Control		Aeronautical Radio		Base Operations		Other Coordination						ISSS	TAAS	ACDC	AERA 1	AERA 2	AERA 3	
A1.1.2	RECEIVING SYSTEM STATUS INFORMATION																																							X	X	X	X			05/18/87
A1.1.2.1	OBSERVE DISPLAY OF NEW/ CHANGED EQUIPMENT/ OPERATIONAL STATUS																																									X	X	X			07/01/88
A1.1.2.2	ENTER SYSTEM STATUS DATA CHANGE																																									X	X	X			07/01/88
A1.1.2.3	RECEIVE NOTICE OF STATUS OF ADJACENT/ BACKUP FACILITY AUTOMATION EQUIPMENT	V				M						C		S		M			T								T															X	X	X			07/01/88
A1.1.2.4	DETECT EQUIPMENT SERVICE INTERRUPTION/ RESTORATION																																									X	X	X			06/16/88
A1.1.2.5	RECEIVE NOTICE OF COMMUNICATION STATUS	V				M						C		S								A					T															X	X	X			05/18/87
A1.1.2.6	REQUEST REPORT ON NAVAID STATUS	V															F								P																	X	X	X			04/08/88
A1.1.2.75	DETECT AIRPORT ENVIRONMENTAL EQUIPMENT SERVICE INTERRUPTION/ RESTORATION ALERT																																									X					07/01/88
A1.1.2.76	ACKNOWLEDGE AIRPORT ENVIRONMENTAL EQUIPMENT SERVICE OPERATIONAL STATUS ALERT																																									X	X	X			06/29/87
A1.1.3	ANALYZING INITIAL REQUESTS FOR CLEARANCES																																									X	X	X	X			05/18/87
A1.1.3.1	SEARCH DISPLAY FOR INACTIVE FLIGHT PLAN ON CLEARANCE REQUEST																																									X	X	X	X			05/18/87
A1.1.3.2	REQUEST FLIGHT DATA READOUT																																									X	X	X	X			05/18/87
A1.1.3.3	REQUEST FLIGHT DATA ENTRY FORMAT CHANGE																																									X	X	X	X			05/18/87
A1.1.4	PROCESSING DEPARTURE/ EN ROUTE TIME INFORMATION																																									X	X	X	X			07/01/88
A1.1.4.1	ENTER DEPARTURE/ EN ROUTE TIME MESSAGE																																									X	X	X	X			05/06/87
A1.1.4.2	INITIATE TRACK MANUALLY																																									X	X	X	X			05/18/87
A1.1.4.3	OBSERVE AUTOMATIC TRACK START																																									X	X	X	X			05/18/87
A1.1.4.4	RECEIVE DEPARTURE/ EN ROUTE TIME NOTICE	V				M						C					F								P		T															X	X	X	X			05/06/87
A1.1.4.75	ACKNOWLEDGE EMPHASIZED DEPARTURE MESSAGE																																									X					06/29/87
A1.1.4.76	OBSERVE EMPHASIZED DEPARTURE MESSAGE																																									X					06/29/87
A1.1.5	PROCESSING REQUESTS FOR FLIGHT FOLLOWING																																									X	X	X	X			05/18/87

TASK STATEMENTS

Task Number	Task Statement	Coordination Media: Voice	Function	Mail	Automated Coord.	Coordinatees: ISSS\TAAS Controller	Area Supervisor	Area Manager	Flight Service	Traffic Management	Mission Coordinator	Airway Facility/DSC	Meteorologist	Pilot	Tower Controller/Sup	Central Flow Control	Aeronautical Radio	Base Operations	Other Coordination	Transition State: ISSS	TAAS	ACCC	AERA 1	AERA 2	AERA 3	Revision Date
A1.1.5.1	EVALUATE CONDITIONS FOR PROVIDING FLIGHT FOLLOWING																			X	X	X	X			05/18/87
A1.1.5.2	RECEIVE REQUEST FOR FLIGHT FOLLOWING	V		M		C			F					P	T					X	X	X	X			05/18/87
A1.1.5.3	DENY FLIGHT FOLLOWING REQUEST	V		M		C			F					P	T					X	X	X	X			05/18/87
A1.1.5.4	REQUEST/ ASSIGN BEACON CODE TO AIRCRAFT	V												P						X	X	X	X			04/22/87
A1.1.5.5	INFORM PILOT OF ALTERNATE INSTRUCTIONS NECESSARY FOR FLIGHT FOLLOWING SERVICE	V												P						X	X	X	X			05/18/87
A1.1.6	HOUSEKEEPING																			X	X	X	X			05/18/87
A1.1.6.1	OFFSET A DATA BLOCK																			X	X	X	X			05/18/87
A1.1.6.2	UPDATE/ REVISE CONTROLLER NOTE																			X	X	X	X			04/08/88
A1.1.6.3	DELETE FLIGHT DATA ENTRY AND FULL DATA BLOCK FROM ATC SYSTEM																			X	X	X	X			05/18/87
A1.1.6.5	SUPPRESS DISPLAY OF FLIGHT DATA ENTRY AND FULL DATA BLOCK FROM ALL DISPLAYS IN OWN SECTOR SUITE																			X	X	X	X			05/18/87
A1.1.6.6	RESTORE DISPLAY OF FLIGHT DATA ENTRY AND FULL DATA BLOCK TO ALL DISPLAYS ON OWN SECTOR SUITE																			X	X	X	X			05/18/87
A1.1.6.7	SUPPRESS DATA BLOCK FROM ALL DISPLAYS IN OWN SECTOR SUITE																			X	X	X	X			05/18/87
A1.1.6.8	RESTORE DATA BLOCK TO ALL DISPLAYS IN OWN SECTOR SUITE																			X	X	X	X			05/18/87
A1.1.6.9	SUPPRESS FLIGHT DATA ENTRY FROM ALL DISPLAYS IN OWN SECTOR SUITE																			X	X	X	X			05/18/87
A1.1.6.10	RESTORE FLIGHT DATA ENTRY TO ALL DISPLAYS IN OWN SECTOR SUITE																			X	X	X	X			05/18/87
A1.1.6.11	ENTER FDE NOTATIONS																			X	X	X	X			05/18/87
A1.1.6.12	DELETE FDE NOTATIONS																			X	X	X	X			05/18/87
A1.1.6.13	RESEQUENCE FLIGHT DATA ENTRY MANUALLY																			X	X	X	X			05/18/87
A1.1.6.14	DELETE CONTROLLER NOTE																			X	X	X	X			04/08/88
A1.1.6.15	DELETE SCRATCH PAD DATA IN FULL DATA BLOCK																				X	X	X			07/01/88

TASK STATEMENTS

Task Number	Task Statement	Coordination Media: Voice	Coordination Media: Function	Coordination Media: Mail	Coordination Media: Automated Coord.	Coordinatees: ISSS\TAAS Controller	Coordinatees: Area Supervisor	Coordinatees: Area Manager	Coordinatees: Flight Service	Coordinatees: Traffic Management	Coordinatees: Mission Coordinator	Coordinatees: Airway Facility/DSC	Coordinatees: Meteorologist	Coordinatees: Pilot	Coordinatees: Tower Controller/Sup	Coordinatees: Central Flow Control	Coordinatees: Aeronautical Radio	Coordinatees: Base Operations	Coordinatees: Other Coordination	Transition State: ISSS	Transition State: TAAS	Transition State: ACCC	Transition State: AERA 1	Transition State: AERA 2	Transition State: AERA 3	Revision Date
A1.1.6.52	REMOVE OBSOLETE PAPER RECORDS OR RECORDED DATA																			X	X					07/07/88
A1.1.6.75	DELETE FLIGHT DATA ENTRY AND FULL DATA BLOCK FROM LOCAL TAAS SYSTEM																				X					06/23/87
A1.2	RESOLVE AIRCRAFT CONFLICTS																			X	X	X	X			05/18/87
A1.2.1	PERFORMING AIRCRAFT CONFLICT RESOLUTION																			X	X	X	X			05/18/87
A1.2.1.1	DETECT AIRCRAFT CONFLICT ALERT INDICATION																			X	X	X	X			05/18/87
A1.2.1.2	DETERMINE VALIDITY OF POTENTIAL AIRCRAFT CONFLICT NOTICE OR INDICATION																			X	X	X	X			05/18/87
A1.2.1.3	RECEIVE CONTROLLER NOTICE OF POTENTIAL AIRCRAFT CONFLICT IN SECTOR	V				C									T					X	X	X	X			05/18/87
A1.2.1.4	INFORM CONTROLLER OF POTENTIAL AIRCRAFT CONFLICT IN HIS SECTOR	V				C									T					X	X	X	X			05/18/87
A1.2.1.5	FORWARD NOTICE OF AIRCRAFT CONFLICT TO SUPERVISOR	V		M			S													X	X	X	X			05/18/87
A1.2.1.7	REVIEW POTENTIAL CONFLICT SITUATION FOR RESOLUTION																			X	X	X	X			05/18/87
A1.2.1.8	DETERMINE APPROPRIATE ACTION TO RESOLVE AIRCRAFT CONFLICT SITUATION																			X	X	X	X			04/08/88
A1.2.1.9	PERCEIVE POTENTIAL AIRCRAFT CONFLICT SITUATION																			X	X	X	X			05/18/87
A1.2.2	PERFORMING MINIMUM SAFE ALTITUDE PROCESSING																			X	X	X	X			05/18/87
A1.2.2.1	DETECT MSAW INDICATION OR ALARM																			X	X	X	X			05/18/87
A1.2.2.2	FORWARD NOTICE OF VALID MSAW OR FLIGHT ASSIST TO SUPERVISOR	V		M			S													X	X	X	X			05/18/87
A1.2.2.3	RECEIVE CONTROLLER NOTICE OF POTENTIAL MSAW IN SECTOR	V				C									T					X	X	X	X			05/18/87
A1.2.2.4	INFORM CONTROLLER OF POTENTIAL MSAW IN HIS SECTOR	V				C									T					X	X	X	X			05/18/87
A1.2.2.5	PERCEIVE POTENTIAL LOW ALTITUDE SITUATION																			X	X	X	X			05/18/87

TASK STATEMENTS

Task Number	Task Statement	Coordination Media				Coordinatees																																		Transition State							Revision Date
		Voice		Function		Mail		Automated Coord.																																									
										ISSS\TAAS Controller		Area Supervisor		Area Manager		Flight Service		Traffic Management		Mission Coordinator		Airway Facility/DSC		Meteorologist		Pilot		Tower Controller/Sup		Central Flow Control		Aeronautical Radio		Base Operations		Other Coordination												ISSS		TAAS		ACDC		AERA 1		AERA 2		AERA 3	
A1.2.2 3	DETERMINE VALIDITY OF MSAW NOTICE OR INDICATION																																									X		X		X		X				05/18/87
A1.2.2.7	DETERMINE APPROPRIATE ACTION TO RESOLVE LOW ALTITUDE SITUATION																																									X		X		X		X				04/08/88
A1.2.3	PERFORMING AIRSPACE CONFLICT PROCESSING																																									X		X		X		X				05/18/87
A1.2.3.1	INFORM CONTROLLER OF POTENTIAL AIRSPACE CONFLICT IN HIS SECTOR	V				M						C														T																X		X		X		X				07/07/88
A1.2.3.2	RECEIVE CONTROLLER NOTICE OF POTENTIAL AIRSPACE CONFLICT IN SECTOR	V										C														T																X		X		X		X				05/18/87
A1.2.3.3	REQUEST RELEASE OF SPECIAL USE AIRSPACE	V				M						C		S																												X		X		X		X				05/18/87
A1.2.3.4	RECEIVE DENIAL OF USE OF SPECIAL USE AIRSPACE	V				M						C		S																												X		X		X		X				05/18/87
A1.2.3.5	RECEIVE APPROVAL FOR USE OF SPECIAL USE AIRSPACE	V				M						C		S																												X		X		X		X				05/18/87
A1.2.3.7	PERCEIVE POTENTIAL AIRSPACE CONFLICT SITUATION																																									X		X		X		X				05/18/87
A1.2.3.8	DETERMINE APPROPRIATE ACTION TO RESOLVE AIRSPACE CONFLICT SITUATION																																									X		X		X		X				05/18/87
A1.2.3.75	DETERMINE VALIDITY OF AIRSPACE CONFLICT NOTICE																																									X		X								07/01/88
A1.2.4	ISSUING UNSAFE CONDITION ADVISORIES																																									X		X		X		X				05/18/87
A1.2.4.1	OBSERVE DISPLAY FOR FIXED OBSTRUCTIONS THAT MAY INTERFERE WITH AIRCRAFT FLIGHT																																									X		X		X		X				05/18/87
A1.2.4.3	FORMULATE ADVISORY/ SAFETY ALERT CONTENT																																									X		X		X		X				05/18/87
A1.2.4.4	DETECT AIRCRAFT MANEUVER IN RESPONSE TO ADVISORY/ ALERT																																									X		X		X		X				05/18/87
A1.2.4.5	ISSUE TRAFFIC ADVISORY/ SAFETY ALERT IN REGARD TO TRAFFIC PROXIMITY	V																								P																X		X		X		X				05/18/87
A1.2.4.6	INFORM PILOT WHEN CLEAR OF TRAFFIC	V																								P																X		X		X		X				05/18/87
A1.2.4.7	ISSUE ADVISORY IN REGARD TO A NON-CONTROLLED OBJECT	V																								P																X		X		X		X				05/18/87

TASK STATEMENTS

Task Number	Task Statement	Coordination Media: Voice	Coordination Media: Function	Coordination Media: Mail	Coordination Media: Automated Coord.	Coordinatees: ISSS\TAAS Controller	Coordinatees: Area Supervisor	Coordinatees: Area Manager	Coordinatees: Flight Service	Coordinatees: Traffic Management	Coordinatees: Mission Coordinator	Coordinatees: Airway Facility/DSC	Coordinatees: Meteorologist	Coordinatees: Pilot	Coordinatees: Tower Controller/Sup	Coordinatees: Central Flow Control	Coordinatees: Aeronautical Radio	Coordinatees: Base Operations	Coordinatees: Other Coordination	Transition State: ISSS	Transition State: TAAS	Transition State: ACCC	Transition State: AERA 1	Transition State: AERA 2	Transition State: AERA 3	Revision Date
A1.2.4.8	INFORM PILOT WHEN CLEAR OF NON-CONTROLLED OBJECT	V												P						X	X	X	X			05/18/87
A1.2.4.9	ISSUE ADVISORY IN REGARD TO RESTRICTED AIRSPACE PROXIMITY	V												P						X	X	X	X			05/18/87
A1.2.4.10	ISSUE ADVISORY IN REGARD TO FLIGHT PLAN DEVIATION	V												P						X	X	X	X			05/18/87
A1.2.4.12	ISSUE SAFETY ALERT IN REGARD TO MINIMUM ALTITUDE	V												P						X	X	X	X			07/11/88
A1.2.4.13	OBSERVE DISPLAY FOR NON-CONTROLLED AIRBORNE OBJECTS THAT MAY INTERFERE WITH AIRCRAFT FLIGHT																			X	X	X	X			05/18/87
A1.2.4.14	DETERMINE NEED FOR ADVISORY/ SAFETY ALERT/ CLEARANCE																			X	X	X	X			04/08/88
A1.2.5	SUPPRESSING ALERTS																			X	X	X	X			05/29/87
A1.2.5.2	SUPPRESS CONFLICT ALERT FOR PAIRED AIRCRAFT																			X	X	X	X			05/18/87
A1.2.5.5	SUPPRESS MSAW FUNCTION FOR AN AIRCRAFT																			X	X	X	X			04/22/87
A1.2.5.75	DETERMINE VALIDITY/ APPROPRIATENESS OF DISPLAY OF AN ALERT																				X					04/08/88
A1.2.5.76	RESTORE SPECIFIC ALERT FUNCTION TO NORMAL																				X					04/08/88
A1.3	MANAGE AIR TRAFFIC SEQUENCES																			X	X	X	X			05/18/87
A1.3.1	RESPONDING TO TRAFFIC MANAGEMENT CONSTRAINTS/ FLOW CONFLICTS																			X	X	X	X			05/18/87
A1.3.1.1	EVALUATE TRAFFIC MANAGEMENT CONSTRAINTS FOR EFFECT ON TRAFFIC FLOW																			X	X	X	X			04/22/87
A1.3.1.2	CHOOSE OPTION TO BRING AIRCRAFT INTO CONFORMANCE WITH TRAFFIC MANAGEMENT RESTRICTIONS																			X	X	X	X			03/31/87
A1.3.1.3	DISCUSS DISCONTINUANCE OF TRAFFIC MANAGEMENT RESTRICTION/ TRAFFIC REROUTE WITH SUPERVISOR	V						S												X	X	X	X			05/18/87
A1.3.1.4	REVIEW OPTIONS TO BRING AIRCRAFT INTO CONFORMANCE WITH TRAFFIC MANAGEMENT RESTRICTIONS																			X	X	X	X			03/31/87

TASK STATEMENTS

Task Number	Task Statement	Coordination Media: Voice	Function	Mail	Automated Coord.	Coordinatees: ISSS\TAAS Controller	Area Supervisor	Area Manager	Flight Service	Traffic Management	Mission Coordinator	Airway Facility/DSC	Meteorologist	Pilot	Tower Controller/Sup	Central Flow Control	Aeronautical Radio	Base Operations	Other Coordination	Transition State: ISSS	TAAS	ACCC	AERA 1	AERA 2	AERA 3	Revision Date
A1.3.1.5	NECOTIATE TRAFFIC MANAGEMENT ACTION WITH PILOT	V												P						X	X	X	X			05/18/87
A1.3.1.6	RECEIVE TRAFFIC MANAGEMENT RESTRICTION	V		M			S			T										X	X	X	X			04/22/87
A1.3.1.8	RECEIVE SUPERVISOR NOTICE TO HOLD/ REROUTE TRAFFIC CLEAR OF CONTINGENCY	V		M			S													X	X	X	X			05/18/87
A1.3.1.9	REQUEST EXCEPTION TO TRAFFIC MANAGEMENT RESTRICTION	V		M			S			T										X	X	X	X			05/18/87
A1.3.1.10	REVIEW TRAFFIC DEMANDS AND TRAFFIC MANAGEMENT RESTRICTIONS WITH SUPERVISOR	V		M			S													X	X	X	X			05/18/87
A1.3.1.11	RECEIVE SUPERVISOR BRIEFING ON WHAT TRAFFIC CONDITIONS TO EXPECT	V					S													X	X	X	X			05/18/87
A1.3.1.13	RECEIVE APPROVAL OF REQUEST FOR EXCEPTION TO FLOW RESTRICTION	V		M			S			T										X	X	X	X			05/18/87
A1.3.1.14	RECEIVE DENIAL OF REQUEST FOR EXCEPTION TO FLOW RESTRICTION	V		M			S			T										X	X	X	X			05/18/87
A1.3.1.75	REQUEST TRAFFIC MANAGEMENT ADVISORIES	V		M			S			T											X					07/01/88
A1.3.2	PROCESSING DEVIATIONS																			X	X	X	X			05/18/87
A1.3.2.1	PERCEIVE AN ALTITUDE OR ROUTE DEVIATION																			X	X	X	X			05/18/87
A1.3.2.2	OBSERVE AIRCRAFT RESUMING NORMAL FLIGHT PLAN																			X	X	X	X			05/18/87
A1.3.2.3	DETERMINE MANEUVER TO ESTABLISH/ RESTORE FLIGHT PLAN CONFORMANCE																			X	X	X	X			05/06/87
A1.3.2.4	RECEIVE CONTROLLER NOTICE OF AIRCRAFT FLIGHT PLAN DEVIATION	V		M			C								T					X	X	X	X			05/18/87
A1.3.2.5	INFORM CONTROLLER/ SUPERVISOR OF AIRCRAFT FLIGHT PLAN DEVIATION	V		M			C	S							T					X	X	X	X			07/01/88
A1.3.2.9	REQUEST DISPLAY OF FDE FOR FLIGHT PLAN																			X	X	X	X			05/18/87
A1.3.2.10	EVALUATE FLIGHT DATA TO DETERMINE FUTURE COURSE OF ACTION																			X	X	X	X			05/18/87
A1.3.2.12	EVALUATE ALTITUDE NONCONFORMANCE INDICATION FOR ACTION NEEDED																			X	X	X	X			06/23/87

TASK STATEMENTS

Task Number	Task Statement	Coordination Media: Voice	Function	Mail	Automated Coord.	Coordinatees: ISSS\TAAS Controller	Area Supervisor	Area Manager	Flight Service	Traffic Management	Mission Coordinator	Airway Facility/DSC	Meteorologist	Pilot	Tower Controller/Sup	Central Flow Control	Aeronautical Radio	Base Operations	Other Coordination	Transition State: ISSS	TAAS	ACCC	AERA 1	AERA 2	AERA 3	Revision Date
A1.3.2.13	EVALUATE UNREASONABLE MODE C INDICATION FOR ACTION NEEDED																			X	X	X	X			07/11/88
A1.3.2.14	DETECT UNREASONABLE MODE C INDICATION																			X	X	X	X			07/11/88
A1.3.2.75	DETECT ALTITUDE NONCONFORMANCE INDICATION																				X					06/29/87
A1.3.3	RESPONDING TO SPECIAL USE AIRSPACE EVENTS																			X	X	X	X			05/18/87
A1.3.3.1	INFORM CONTROLLER/ SUPERVISOR/ PILOT OF AIRSPACE RESTRICTION IMPOSED/ RELEASE	V		M		C	S							P	T					X	X	X	X			05/06/87
A1.3.3.3	RECEIVE REQUEST FOR USE OF SPECIAL USE AIRSPACE FROM SUPERVISOR/ CONTROLLER/ PILOT	V		M		C	S							P						X	X	X	X			05/06/87
A1.3.3.4	DETERMINE RESTRICTIONS TO USERS NECESSARY WITHIN RELEASED AIRSPACE																			X	X	X	X			05/18/87
A1.3.3.5	OBSERVE DISPLAY OF AIRSPACE RESTRICTION STATUS CHANGE																			X	X	X	X			06/01/88
A1.3.3.6	RECEIVE NOTICE OF AIRSPACE RESTRICTION/ RELEASE	V		M		C	S				X			P	T					X	X	X	X			05/06/87
A1.3.4	ESTABLISHING ARRIVAL SEQUENCES																			X	X	X	X			06/23/87
A1.3.4.1	DETERMINE DESCENT TIME OR POINT																			X	X	X	X			05/18/87
A1.3.4.2	PROJECT TRAFFIC SEQUENCE TO ESTABLISH/ MODIFY APPROACH FLOW TO AIRPORT OR SECTOR																			X	X	X	X			04/22/87
A1.3.4.4	REQUEST AIRCRAFT BE REROUTED	V		M		C	S			T					T					X	X	X	X			04/30/87
A1.3.4.5	PROJECT MENTALLY THE RANGE/ BEARING BETWEEN AIRCRAFT																			X	X	X	X			05/06/87
A1.3.4.6	PROJECT MENTALLY THE ARRIVAL FLOW FOR AIRCRAFT LANDING IN OR NEAR THIS SECTOR																			X	X	X	X			04/27/87
A1.3.4.7	ISSUE NEW ATIS CODE	V												P							X	X	X			06/29/87
A1.3.4.8	INFORM PILOT TO OBTAIN NEW ATIS INFORMATION	V												P							X	X	X			06/29/87
A1.3.4.9	ISSUE ATIS INFORMATION	V												P							X	X	X			06/29/87
A1.3.5	MANAGING DEPARTURE FLOWS																			X	X	X	X			06/23/87

TASK STATEMENTS

Task Number	Task Statement	Coordination Media: Voice	Function	Mail	Automated Coord.	Coordinatees: ISSS\TAAS Controller	Area Supervisor	Area Manager	Flight Service	Traffic Management	Mission Coordinator	Airway Facility/DSC	Meteorologist	Pilot	Tower Controller/Sup	Central Flow Control	Aeronautical Radio	Base Operations	Other Coordination	Transition State: ISSS	TAAS	ACCC	AERA 1	AERA 2	AERA 3	Revision Date
A1.3.5.1	VALIDATE MODE C ALTITUDE																			X	X	X	X			Ø5/18/87
A1.3.5.2	ENTER REPORTED ALTITUDE																			X	X	X	X			Ø5/18/87
A1.3.5.3	RECEIVE NOTICE OF MISSED APPROACH	V	F											P	T					X	X	X	X			Ø5/18/87
A1.3.5.4	PROJECT TRAFFIC SEQUENCE TO ESTABLISH/ MODIFY DEPARTURE FLOW																			X	X	X	X			Ø7/Ø1/88
A1.3.6	MONITORING NON-CONTROLLED OBJECTS																			X	X	X	X			Ø5/18/87
A1.3.6.1	OBSERVE AIRSPACE INTRUSION BY A NON-CONTROLLED OBJECT																			X	X	X	X			Ø5/18/87
A1.3.6.2	ENTER CONTROLLER NOTE																			X	X	X	X			Ø4/Ø8/88
A1.3.6.3	FLIGHT-FOLLOW AN OBSERVED NON-CONTROLLED OBJECT																			X	X	X	X			Ø5/18/87
A1.3.6.4	FORWARD NOTICE OF AIRSPACE INTRUSION BY A NON CONTROLLED OBJECT	V		M		C	S			T					T					X	X	X	X			Ø5/18/87
A1.3.6.5	RECEIVE NOTICE OF AIRSPACE INTRUSION BY A NON-CONTROLLED OBJECT	V		M		C	S			T					T					X	X	X	X			Ø5/18/87
A1.3.7	RESPONDING TO TEMPORARY RELEASE OF AIRSPACE REQUESTS																			X	X	X	X			Ø5/18/87
A1.3.7.1	RECEIVE CONTROLLER/ SUPERVISOR REQUEST FOR TEMPORARY USE OF AIRSPACE	V		M		C	S								T					X	X	X	X			Ø5/Ø4/87
A1.3.7.2	FORWARD APPROVAL FOR TEMPORARY USE OF AIRSPACE	V		M		C	S								T					X	X	X	X			Ø5/Ø4/87
A1.3.7.3	FORWARD DENIAL OF TEMPORARY USE OF AIRSPACE	V		M		C	S								T					X	X	X	X			Ø5/18/87
A1.3.7.4	SUPPRESS MAP ASSOCIATED WITH TEMPORARY USE OF AIRSPACE																			X	X	X	X			Ø5/18/87
A1.3.7.5	DISCUSS RELEASE OF AIRSPACE FOR TEMPORARY USE WITH SUPERVISOR/ OTHER CONTROLLER	V				C	S													X	X	X	X			Ø7/Ø1/88
A1.3.7.6	SELECT MAP DISPLAY OF ADAPTED AIRSPACE REQUESTED FOR USE BY ANOTHER CONTROLLER																			X	X	X	X			Ø5/18/87
A1.3.7.7	EVALUATE FEASIBILITY OF RELEASING AIRSPACE TEMPORARILY																			X	X	X	X			Ø5/18/87
A1.3.7.8	RECEIVE NOTIFICATION OF RETURN OF RELEASED AIRSPACE	V		M		C	S								T					X	X	X	X			Ø6/Ø1/88

Task Number	Task Statement	Coordination Media				Coordinatees																				Transition State						Revision Date
		Voice	Function		Mail	Automated Coord.			ISSS\TAAS Controller	Area Supervisor	Area Manager	Flight Service	Traffic Management Coordinator	Mission Coordinator	Airway Facility/DSC	Meteorologist	Pilot	Tower Controller/Sup	Central Flow Control	Aeronautical Radio	Base Operations	Other Coordination					ISSS	TAAS	ACCC	AERA 1	AERA 2	AERA 3	
A1.3.8	REQUESTING TEMPORARY RELEASE OF AIRSPACE																									X	X	X	X			05/18/87
A1.3.8.1	REQUEST TEMPORARY USE OF AIRSPACE	V			M				C	S																X	X	X	X			05/18/87
A1.3.8.2	RECEIVE RELEASE/ USE OF AIRSPACE	V			M				C	S																X	X	X	X			05/06/87
A1.3.8.3	RECEIVE REJECTION OF USE OF AIRSPACE	V			M				C	S																X	X	X	X			05/18/87
A1.3.8.4	FORWARD NOTICE OF RETURN OF RELEASED AIRSPACE	V			M				C	S								T								X	X	X	X			06/01/88
A1.4	ROUTE OR PLAN FLIGHTS																									X	X	X	X			05/18/87
A1.4.1	PLANNING CLEARANCES																									X	X	X	X			05/18/87
A1.4.1.1	RECEIVE CONTROLLER NOTICE ON REQUESTED CLEARANCE OF AIRCRAFT LEAVING HIS SECTOR	V			M				C									T								X	X	X	X			05/18/87
A1.4.1.2	RECEIVE CLEARANCE REQUEST FROM ATCT/ FSS/ PILOT/ SUPERVISOR	V			M					S		P					P	T								X	X	X	X			05/18/87
A1.4.1.3	RECEIVE CONTROLLER REQUEST FOR CLEARANCE/ APPROVAL	V			M				C									T								X	X	X	X			05/18/87
A1.4.1.4	FORWARD CLEARANCE REQUEST TO ANOTHER CONTROLLER	V			M				C									T								X	X	X	X			05/18/87
A1.4.1.5	REQUEST CLEARANCE/ APPROVAL FROM ANOTHER CONTROLLER	V			M				C									T								X	X	X	X			05/18/87
A1.4.1.6	RECEIVE CLEARANCE APPROVAL/ CLEARANCE RESTRICTIONS FROM ANOTHER CONTROLLER	V			M				C									T								X	X	X	X			05/06/87
A1.4.1.7	RECEIVE CLEARANCE DISAPPROVAL/ DENIAL FROM ANOTHER CONTROLLER	V			M				C									T								X	X	X	X			05/18/87
A1.4.1.8	RECEIVE ALTERNATE SUGGESTION FOR CLEARANCE/ APPROVAL REQUESTED OF ANOTHER CONTROLLER	V			M				C									T								X	X	X	X			05/18/87
A1.4.1.10	REVIEW POTENTIAL IMPEDIMENTS FOR IMPACT ON PROPOSED CLEARANCE																									X	X	X	X			05/18/87
A1.4.1.12	DISCUSS CLEARANCE ALTERNATIVES WITH PILOT	V															P									X	X	X	X			05/18/87
A1.4.1.13	EVALUATE FDE CHANGES FOR CLEARANCE PLANNING OR FUTURE ACTIONS																									X	X	X	X			05/18/87
A1.4.1.14	DETERMINE PRIORITY OF CONTROL ACTIONS																									X	X	X	X			05/18/87

Task Number	Task Statement	Coordination Media				Coordinatees																		Transition State					Revision Date
		Voice	Function	Mail	Automated Coord.	ISSS\TAAS Controller	Area Supervisor	Area Manager	Flight Service	Traffic Management	Mission Coordinator	Airway Facility/DSC	Meteorologist	Pilot	Tower Controller/Supv	Central Flow Control	Aeronautical Radio	Base Operations	Other Coordination						ISSS	TAAS	ACCC	AERA 1	AERA 2	AERA 3	
A1.4.1.15	PERCEIVE NEED FOR AMENDED CLEARANCE																							X	X	X	X			Ø5/18/87
A1.4.1.16	FORMULATE CONTROLLER PLAN OF ACTION FOR CLEARANCE GENERATION																							X	X	X	X			Ø5/18/87
A1.4.1.75	DETERMINE APPROPRIATE MENTAL PLAN FOR AIRCRAFT CLEARANCE																							X	X					Ø6/29/87
A1.4.2	RESPONDING TO CONTINGENCIES																							X	X	X	X			Ø5/18/87
A1.4.2.1	DECLARE EMERGENCY AND INVOKE CONTINGENCY PLAN	V		M		C	S																	X	X	X	X			Ø6/Ø1/88
A1.4.2.2	RECEIVE NOTICE OF PILOT OR AIRCRAFT HAVING A PROBLEM (E.G., OVERDUE, LOSS OF RADIO CONTACT)	V		M		C	S		F					P	T			B						X	X	X	X			Ø4/Ø8/88
A1.4.2.3	ISSUE INSTRUCTIONS TO PILOT (NORDO) FOR IDENTIFICATION TURN/ TRANSPONDER RESPONSE	V												P										X	X	X	X			Ø7/Ø1/88
A1.4.2.4	DETECT A PILOT OR AIRCRAFT PROBLEM (E.G., HYPOXIA, EXCEPTION BEACON CODE)	V												P										X	X	X	X			Ø5/18/87
A1.4.2.5	FORWARD CONTINGENCY INFORMATION TO SUPERVISOR/ ANOTHER CONTROLLER	V		M		C	S								T									X	X	X	X			Ø5/18/87
A1.4.2.6	INFORM DESIGNATED PERSONNEL OF AIRCRAFT HAVING FLIGHT PROBLEMS	V		M			S		F						T									X	X	X	X			Ø5/18/87
A1.4.2.7	REQUEST RELAY OF INSTRUCTIONS TO PILOT (NORDO) FOR IDENTIFICATION TURN/ TRANSPONDER RESPONSE	V		M		C	S		F					P	T									X	X	X	X			Ø6/Ø1/88
A1.4.2.8	CONDUCT SEARCH FOR AIRCRAFT WITHOUT RADIO CONTACT	V		M		C	S		F					P				B						X	X	X	X			Ø5/18/87
A1.4.2.9	OBSERVE AIRCRAFT TURN/ TRANSPONDER RESPONSE FOLLOWING IDENTIFICATION REQUEST																							X	X	X	X			Ø5/18/87
A1.4.2.1Ø	CONDUCT RADIO/ RADAR SEARCH FOR OVERDUE AIRCRAFT	V		M			S		F					P				B						X	X	X	X			Ø5/Ø6/87
A1.4.2.11	RECEIVE SUPERVISOR NOTICE OF EMERGENCY DECLARED AND CONTINGENCY PLAN INVOKED	V		M			S																	X	X	X	X			Ø5/18/87
A1.4.2.12	RECEIVE SUPERVISOR NOTICE TO CONDUCT COMMUNICATIONS SEARCH FOR OVERDUE/ NORDO AIRCRAFT	V					S																	X	X	X	X			Ø5/18/87

TASK STATEMENTS

Task Number	Task Statement	Coordination Media: Voice	Function	Mail	Automated Coord.	Coordinatees: ISSS\TAAS Controller	Area Supervisor	Area Manager	Flight Service	Traffic Management	Mission Coordinator	Airway Facility/DSC	Meteorologist	Pilot	Tower Controller/Sup	Central Flow Control	Aeronautical Radio	Base Operations	Other Coordination	Transition State: ISSS	TAAS	ACCC	AERA 1	AERA 2	AERA 3	Revision Date
A1.4.2.13	RECEIVE NOTICE THAT SUPERVISOR WILL CONDUCT COMMUNICATIONS SEARCH FOR OVERDUE/ NORDO AIRCRAFT	V					S													X	X	X	X			07/01/88
A1.4.2.14	RECEIVE PILOT NOTICE OF EMERGENCY DECLARED	V												P						X	X	X	X			05/18/87
A1.4.3	RECOGNIZING SPECIAL OPERATIONS																			X	X	X	X			05/18/87
A1.4.3.1	PERCEIVE PRESENCE OF SPECIAL OPERATION																			X	X	X	X			05/18/87
A1.4.3.2	RECEIVE REVIEW/ NOTICE OF SPECIAL OPERATION	V		M		C	S			T				P	T					X	X	X	X			07/11/88
A1.4.3.3	FORWARD NOTICE OF SPECIAL OPERATIONS TO ANOTHER CONTROLLER/ SUPERVISOR	V		M		C	S								T					X	X	X	X			05/18/87
A1.4.4	REVIEWING FLIGHT PLANS																			X	X	X	X			05/18/87
A1.4.4.1	OBSERVE NEW FLIGHT PLAN POSTING																			X	X	X	X			05/18/87
A1.4.4.2	REVIEW FLIGHT PLAN FOR COMPLETENESS																			X	X	X	X			05/18/87
A1.4.4.3	ENTER FLIGHT PLAN																			X	X	X	X			05/18/87
A1.4.4.4	ACKNOWLEDGE NEW FLIGHT PLAN RECEIPT																			X	X	X	X			05/18/87
A1.4.4.5	REVIEW FLIGHT PLAN FOR ERRORS/ DATA LIST SEQUENCE																			X	X	X	X			05/18/87
A1.4.4.6	RECEIVE FLIGHT PLAN FROM PILOT	V												P						X	X	X	X			05/18/87
A1.4.4.7	RECEIVE FLIGHT PLAN VERBALLY FORWARDED	V				C			F						T			B	O	X	X	X	X			05/18/87
A1.4.4.8	QUERY PILOT ABOUT FLIGHT PLAN	V												P						X	X	X	X			05/18/87
A1.4.4.9	QUERY THE RELAYER OF A FLIGHT PLAN	V		M		C			F						T			B	O	X	X	X	X			05/18/87
A1.4.4.10	FORWARD FLIGHT PLAN VERBALLY	V				C			F						T					X	X	X	X			05/18/87
A1.4.4.11	ENTER STEREO FLIGHT PLAN																			X	X	X	X			05/18/87
A1.4.4.12	ENTER VFR FLIGHT PLAN																			X	X	X	X			05/18/87
A1.4.4.13	REQUEST FLIGHT PLAN READOUT																			X	X	X	X			04/30/87
A1.4.4.14	ENTER SCRATCH PAD DATA IN FULL DATA BLOCK																				X	X	X			07/01/88
A1.4.5	PROCESSING FLIGHT PLAN AMENDMENTS																			X	X	X	X			05/01/87
A1.4.5.1	RECEIVE FLIGHT DATA REVISION																			X	X	X	X			05/18/87

TASK STATEMENTS

Task Number	Task Statement	Coordination Media				Coordinatees																														Transition State						Revision Date
		Voice		Function		Mail		Automated Coord.		ISSS\TAAS Controller		Area Supervisor		Area Manager		Flight Service		Traffic Management		Mission Coordinator		Airway Facility/DSC		Meteorologist		Pilot		Tower Controller/Sup		Central Flow Control		Aeronautical Radio		Base Operations		Other Coordination		ISSS		TAAS		ACCC		AERA 1		AERA 2		AERA 3	
A1.4.5.2	EMPHASIZE FLIGHT DATA ENTRY POSTING FOR REMINDER ACTION																																			X		X		X		X						05/18/87
A1.4.5.3	ENTER FLIGHT PLAN AMENDMENT																																			X		X		X		X						05/18/87
A1.4.5.4	ENTER PILOT'S POSITION REPORT IN SYSTEM																																			X		X		X		X						05/18/87
A1.4.5.5	DELETE FLIGHT DATA ENTRY EMPHASIS																																			X		X		X		X						05/01/87
A1.4.5.6	RECEIVE FLIGHT PLAN AMENDMENT VERBALLY FORWARDED	V										C				F												T						B	O			X		X		X		X						05/18/87
A1.4.5.7	RECEIVE PILOT'S POSITION REPORT	V														F										P								B	O			X		X		X		X						05/18/87
A1.4.5.8	FORWARD FLIGHT PLAN AMENDMENT VERBALLY	V										C				F												T										X		X		X		X						05/18/87
A1.4.5.9	INFORM CONTROLLER UNABLE FLIGHT PLAN AMENDMENT	V					M					C																										X		X		X		X						05/18/87
A1.4.5.10	RECEIVE CONTROLLER ADVICE OF UNABLE FLIGHT PLAN AMENDMENT	V					M					C																										X		X		X		X						05/18/87
A1.4.5.11	RECEIVE REQUESTED FLIGHT PLAN CHANGES	V					M					C	S			F	T							P	T									O				X		X		X		X						05/18/87
A1.4.6	RECEIVING TRANSFER OF CONTROL/ RADAR IDENTIFICATION																																			X		X		X		X						05/18/87
A1.4.6.1	RECEIVE HANDOFF REQUEST	V		F								C																T										X		X		X		X						05/18/87
A1.4.6.2	DENY HANDOFF	V		F								C																T										X		X		X		X						05/18/87
A1.4.6.3	ACCEPT VERBAL HANDOFF/ INITIATE MANUAL TRACK START	V										C																T										X		X		X		X						05/06/87
A1.4.6.4	ACCEPT AUTOMATIC HANDOFF			F								C																T										X		X		X		X						05/18/87
A1.4.6.5	DETERMINE THAT AIRCRAFT IS ENTERING SECTOR																																			X		X		X		X						05/18/87
A1.4.6.6	DETERMINE RESPONSE TO HANDOFF REQUEST																																			X		X		X		X						05/18/87
A1.4.6.7	RECEIVE CONTROL OF AIRCRAFT	V					M					C																T										X		X		X		X						05/18/87
A1.4.6.8	REQUEST TRANSFER OF CONTROL	V					M					C																T										X		X		X		X						05/18/87
A1.4.7	INITIATING TRANSFER OF CONTROL/ RADAR IDENTIFICATION																																			X		X		X		X						05/18/87
A1.4.7.1	INITIATE HANDOFF FUNCTION			F								C																T										X		X		X		X						05/18/87
A1.4.7.2	OBSERVE AUTOMATIC INITIATION OF HANDOFF																																			X		X		X		X						05/18/87

TASK STATEMENTS

Task Number	Task Statement	Coordination Media: Voice	Function	Mail	Automated Coord.	Coordinates: ISSS\TAAS Controller	Area Supervisor	Area Manager	Flight Service	Traffic Management	Mission Coordinator	Airway Facility/DSC	Meteorologist	Pilot	Tower Controller/Sup	Central Flow Control	Aeronautical Radio	Base Operations	Other Coordination	Transition State: ISSS	TAAS	ACCC	AERA 1	AERA 2	AERA 3	Revision Date
A1.4.7.3	RETRACT HANDOFF	V	F			C									T					X	X	X	X			Ø5/18/87
A1.4.7.4	RECEIVE HANDOFF ACCEPTANCE	V	F			C									T					X	X	X	X			Ø5/18/87
A1.4.7.5	DISCUSS TRANSFER OF CONTROL WITH OTHER CONTROLLER	V				C									T					X	X	X	X			Ø5/18/87
A1.4.7.6	INITIATE VERBAL HANDOFF	V				C									T					X	X	X	X			Ø5/18/87
A1.4.7.7	RECEIVE REQUEST FOR TRANSFER OF CONTROL	V		M		C									T					X	X	X	X			Ø5/18/87
A1.4.7.8	DETERMINE THAT AIRCRAFT IS LEAVING SECTOR																			X	X	X	X			Ø5/18/87
A1.4.7.9	DETECT MANUAL HANDOFF MODE INDICATION																			X	X	X	X			Ø5/18/87
A1.4.7.1Ø	REQUEST TRANSFER OF FLIGHT PLAN DATA TO ANOTHER FACILITY																			X	X	X	X			Ø5/18/87
A1.4.7.11	INFORM CONTROLLER OF ANY CONDITIONS AFFECTING TRANSFER OF CONTROL	V		M		C									T					X	X	X	X			Ø5/18/87
A1.4.7.12	INFORM CONTROLLER OF RELINQUISHED CONTROL OF AIRCRAFT	V		M		C									T					X	X	X	X			Ø5/18/87
A1.4.7.13	DETECT HANDOFF ALERT INDICATION																			X	X	X	X			Ø5/18/87
A1.4.7.14	REDIRECT HANDOFF	V	F			C									T					X	X	X	X			Ø7/Ø1/88
A1.4.7.15	RECEIVE HANDOFF REJECTION	V	F			C									T					X	X	X	X			Ø5/18/87
A1.4.8	ISSUING POINTOUTS																			X	X	X	X			Ø5/18/87
A1.4.8.1	INITIATE POINTOUT	V	F			C									T					X	X	X	X			Ø7/Ø1/88
A1.4.8.3	FORCE FLIGHT DATA ENTRY TO ANOTHER CONTROLLER		F			C									T					X	X	X	X			Ø5/18/87
A1.4.8.4	RECEIVE ACCEPTANCE OF POINTOUT	V	F			C									T					X	X	X	X			Ø7/Ø1/88
A1.4.8.5	RECEIVE REJECTION OF POINTOUT	V	F			C									T					X	X	X	X			Ø7/Ø1/88
A1.4.8.7	DISCUSS POINTOUT WITH OTHER CONTROLLER	V				C									T					X	X	X	X			Ø5/18/87
A1.4.9	RESPONDING TO POINTOUTS																			X	X	X	X			Ø5/18/87
A1.4.9.1	RECEIVE POINTOUT	V	F			C									T					X	X	X	X			Ø7/Ø1/88
A1.4.9.2	ACCEPT POINTOUT	V	F			C									T					X	X	X	X			Ø7/Ø1/88
A1.4.9.3	DENY POINTOUT	V	F			C									T					X	X	X	X			Ø7/Ø1/88
A1.4.9.4	SUPPRESS FULL DATA BLOCK AFTER POINTOUT																			X	X	X	X			Ø6/Ø2/88
A1.4.9.5	DETERMINE RESPONSE TO POINTOUT																			X	X	X	X			Ø5/18/87

Task Number	Task Statement	Coordination Media				Coordinatees																		Transition State					Revision Date
		Voice	Function	Mail	Automated Coord.	ISSS\TAAS Controller	Area Supervisor	Area Manager	Flight Service	Traffic Management	Mission Coordinator	Airway Facility/DSC	Meteorologist	Pilot	Tower Controller/Sup	Central Flow Control	Aeronautical Radio	Base Operations	Other Coordination						ISSS	TAAS	ACCC	AERA 1	AERA 2	AERA 3	
A1.4.10	ISSUING CLEARANCES																							X	X	X	X			05/18/87
A1.4.10.2	APPROVE CLEARANCE REQUEST	V		M		C	S		F						T									X	X	X	X			05/18/87
A1.4.10.3	SUGGEST CLEARANCE ALTERNATIVES TO PILOT	V												P										X	X	X	X			05/18/87
A1.4.10.4	FORMULATE A CLEARANCE WITH APPROPRIATE INSTRUCTIONS																							X	X	X	X			05/18/87
A1.4.10.5	ISSUE CLEARANCE AND INSTRUCTIONS TO PILOT	V												P										X	X	X	X			05/18/87
A1.4 10.6	ISSUE CLEARANCE THROUGH ATCT/FSS FOR RELAY TO PILOT	V		M					F						T									X	X	X	X			05/18/87
A1.4.10.7	VERIFY AIRCRAFT COMPLIANCE WITH CLEARANCE																							X	X	X	X			05/18/87
A1.4.10.8	QUERY PILOT REGARDING CONFORMANCE WITH CLEARANCE	V												P										X	X	X	X			05/18/87
A1.4.10.9	DENY CLEARANCE REQUEST	V		M		C	S		F					P	T									X	X	X	X			05/18/87
A1.4.10.10	SUGGEST ALTERNATIVE TO CLEARANCE REQUEST FROM CONTROLLER	V		M		C									T									X	X	X	X			05/18/87
A1.4.12	MANAGING AUTOMATED HANDOFF FEATURES																							X	X	X	X			04/08/88
A1.4.12.1	INHIBIT AUTOMATIC HANDOFF FOR ALL TRACKS OR FOR DESIGNATED TRACK																							X	X	X	X			05/18/87
A1.4.12.2	RESTORE AUTOMATIC HANDOFF FOR ALL TRACKS OR FOR DESIGNATED TRACK																							X	X	X	X			05/18/87
A1.4.13	ESTABLISHING, MAINTAINING, AND TERMINATING RADIO COMMUNICATIONS																							X	X	X	X			05/18/87
A1.4.13.1	RECEIVE REQUEST TO CANCEL AIR TRAFFIC SERVICES	V												P										X	X	X	X			05/18/87
A1.4.13.2	TERMINATE RADIO COMMUNICATIONS WITH AIRCRAFT	V												P										X	X	X	X			05/18/87
A1.4 13.3	RECEIVE ARRIVAL MESSAGE	V							F					P										X	X	X	X			05/18/87
A1.4.13.4	DETERMINE FREQUENCY IN USE BY RECEIVING SECTOR																							X	X	X	X			05/18/87
A1.4.13.5	ISSUE CHANGE OF FREQUENCY TO PILOT	V												P										X	X	X	X			05/18/87
A1.4.13.6	RECEIVE INITIAL RADIO CONTACT FROM PILOT	V												P										X	X	X	X			05/18/87
A1.4.13.7	ISSUE ALTIMETER SETTING	V												P										X	X	X	X			05/18/87

TASK STATEMENTS

Task Number	Task Statement	Coordination Media: Voice	Coordination Media: Function	Coordination Media: Mail	Coordination Media: Automated Coord.	Coordinatees: ISSS\TAAS Controller	Coordinatees: Area Supervisor	Coordinatees: Area Manager	Coordinatees: Flight Service	Coordinatees: Traffic Management	Coordinatees: Mission Coordinator	Coordinatees: Airway Facility/DSC	Coordinatees: Meteorologist	Coordinatees: Pilot	Coordinatees: Tower Controller/Sup	Coordinatees: Central Flow Control	Coordinatees: Aeronautical Radio	Coordinatees: Base Operations	Coordinatees: Other Coordination	Transition State: ISSS	Transition State: TAAS	Transition State: ACCC	Transition State: AERA 1	Transition State: AERA 2	Transition State: AERA 3	Revision Date
A1.4.13.8	VERIFY AIRCRAFT ALTITUDE	V												P						X	X	X	X			05/18/87
A1.4.14	ESTABLISHING/ REESTABLISHING RADAR IDENTIFICATION																			X	X	X	X			05/18/87
A1.4.14.1	OBSERVE TARGET ENTERING RADAR COVERAGE																			X	X	X	X			05/18/87
A1.4.14.2	INFORM PILOT THAT RADAR CONTACT IS ESTABLISHED	V												P						X	X	X	X			05/18/87
A1.4.14.3	CONDUCT RADAR IDENTIFICATION PROCEDURES	V												P						X	X	X	X			06/27/88
A1.5	ASSESS WEATHER IMPACT																			X	X	X	X			05/18/87
A1.5.1	RESPONDING TO SIGNIFICANT WEATHER INFORMATION																			X	X	X	X			05/18/87
A1.5.1.3	RECEIVE WEATHER BRIEFING FROM METEOROLOGIST	V		M									W							X	X	X	X			05/18/87
A1.5.1.5	DETERMINE WHETHER ANOTHER CONTROLLER OR PILOT NEEDS WEATHER ADVISORY																			X	X	X	X			05/18/87
A1.5.1.9	ISSUE WEATHER/ ADVISORY/ UPDATE TO PILOT/ ANOTHER CONTROLLER	V		M		C								P	T					X	X	X	X			05/06/87
A1.5.1.10	INFORM SUPERVISOR/ TMC OF WEATHER IMPACT ON ROUTES/ FLOW	V		M			S			T										X	X	X	X			05/06/87
A1.5.1.12	RECEIVE WEATHER ADVISORY FROM ANOTHER CONTROLLER/ SUPERVISOR/ METEOROLOGIST	V		M		C	S						W		T					X	X	X	X			05/18/87
A1.5.1.13	RECEIVE CONTROLLER REQUEST FOR WEATHER INFORMATION	V		M		C									T					X	X	X	X			05/18/87
A1.5.1.14	FORWARD WEATHER INFORMATION TO SUPERVISOR/ METEOROLOGIST	V		M			S						W							X	X	X	X			05/06/87
A1.5.1.16	BROADCAST RECORDED WEATHER INFORMATION	V												P						X	X	X	X			05/18/87
A1.5.1.18	REQUEST SUPERVISOR/ TMC TO RELEASE AIRSPACE	V		M			S			T										X	X	X	X			07/01/88
A1.5.1.22	ENTER AIRPORT ENVIRONMENTAL DATA INTO SYSTEM																				X	X	X			06/29/87
A1.5.1.75	OBSERVE DISPLAY OF WEATHER LINE/ INTENSITY/ MOVEMENT																			X	X					06/02/88
A1.5.1.76	DETERMINE WEATHER IMPACT ON ROUTES/ FLOW																			X	X					06/29/87

Task Number	Task Statement	Coordination Media				Coordinatees																Transition State					Revision Date
		Voice	Function	Mail	Automated Coord.	ISSS\TAAS Controller	Area Supervisor	Area Manager	Flight Service	Traffic Management	Mission Coordinator	Airway Facility/DSC	Meteorologist	Pilot	Tower Controller/Sup	Central Flow Control	Aeronautical Radio	Base Operations	Other Coordination			ISSS	TAAS	ACDC	AERA 1	AERA 2	AERA 3	
A1.5.1.77	DETERMINE ALTITUDE/ROUTE CHANGE TO BYPASS SEVERE WEATHER																					X	X				06/29/87
A1.5.1.78	EVALUATE IMPACT OF NEW A&M CONDITION																						X				05/23/87
A1.5.1.79	RECEIVE PIREP ON WEATHER	V				C								P									X				06/29/87
A1.5.1.80	RECEIVE NEW ROUTING FOR WEATHER AVOIDANCE FROM SUPERVISOR/ TMC	V			M		S			T												X	X				06/29/87
A1.5.1.81	FORWARD URGENT PIREP TO OTHER CONTROLLER	V			M	C									T							X	X				07/12/88
A1.5.1.82	RECORD PIREP NOTE																					X	X				06/02/88
A1.5.1.83	REQUEST WEATHER INFORMATION	V			M	C							W										X				07/01/88
A1.5.2	PROCESSING WEATHER REPORTS																					X	X	X	X		05/18/87
A1.5.2.1	RECEIVE AIRPORT SPECIFIC NOTAM	V	F		M		S			T					T								X	X	X		06/02/88
A1.5.2.2	RECEIVE WEATHER REPORT UPDATE (E.G., HOURLY SURFACE OBSERVATION)	V			M		S						W									X	X	X	X		06/27/88
A1.5.2.4	DETERMINE WHETHER RUNWAY CONDITIONS HAVE CHANGED																					X	X	X	X		05/18/87
A1.5.2.5	DETERMINE WHETHER CONTROL ZONE IS IFR/VFR																					X	X	X	X		05/18/87
A1.5.2.6	REVIEW ATIS VOICE RECORDING																					X	X	X	X		05/18/87
A1.5.2.7	FORWARD RUNWAY USE DATA	V			M		S			T												X	X	X	X		05/18/87
A1.5.2.9	RECEIVE RUNWAY USE DATA	V	F		M		S			T					T									X	X	X		06/29/87
A1.5.2.10	DETECT AIRPORT ENVIRONMENTAL DATA ALERT																							X	X	X	07/01/88
A1.5.2.11	DETERMINE FAULTY AIRPORT ENVIRONMENTAL SENSOR																					X	X	X	X		05/18/87
A1.5.2.12	ENTER AIRPORT ENVIRONMENTAL SENSOR DATA OVERRIDE																					X	X	X	X		06/23/87
A1.5.2.13	RECEIVE NOTICE OF FAULTY AIRPORT ENVIRONMENTAL SENSOR	V			M										T							X	X	X	X		05/18/87
A1.5.2.76	RECEIVE GENERAL NATURE NOTAM	V			M		S			T					T									X			06/02/88
A1.5.2.77	ACKNOWLEDGE AIRPORT ENVIRONMENTAL DATA ALERT		F																					X			06/25/87

TASK STATEMENTS

Task Number	Task Statement	Coordination Media: Voice	Coordination Media: Function	Coordination Media: Mail	Coordination Media: Automated Coord.	Coordinatees: ISSS\TAAS Controller	Coordinatees: Area Supervisor	Coordinatees: Area Manager	Coordinatees: Flight Service	Coordinatees: Traffic Management	Coordinatees: Mission Coordinator	Coordinatees: Airway Facility/DSC	Coordinatees: Meteorologist	Coordinatees: Pilot	Coordinatees: Tower Controller/Sup	Coordinatees: Central Flow Control	Coordinatees: Aeronautical Radio	Coordinatees: Base Operations	Coordinatees: Other Coordination	Transition State: ISSS	Transition State: TAAS	Transition State: ACCC	Transition State: AERA 1	Transition State: AERA 2	Transition State: AERA 3	Revision Date
A1.5.2.78	REVIEW DISPLAYED WEATHER INFORMATION																				X					Ø6/23/87
A1.6	MANAGE SECTOR/POSITION RESOURCES																			X	X	X	X			Ø5/18/87
A1.6.1	BRIEFING RELIEVING CONTROLLERS																			X	X	X	X			Ø5/18/87
A1.6.1.1	BRIEF RELIEVING CONTROLLER	V					C													X	X	X	X			Ø5/18/87
A1.6.1.2	SIGN OFF AT CONSOLE																			X	X	X	X			Ø5/18/87
A1.6.1.3	VERIFY COMPLETENESS OF RELIEF BRIEFING RECEIPT																			X	X	X	X			Ø5/18/87
A1.6.2	ASSUMING POSITION RESPONSIBILITY																			X	X	X	X			Ø5/2Ø/87
A1.6.2.1	REVIEW SYSTEM STATUS TO DETERMINE CURRENCY/ UPDATE SELF																			X	X	X	X			Ø5/18/87
A1.6.2.3	VERIFY THAT ALL REQUIRED PARAMETERS ARE IN PROPER LOCATION																			X	X	X	X			Ø5/18/87
A1.6.2.4	SIGN ON AT DESIGNATED CONSOLE																			X	X	X	X			Ø5/18/87
A1.6.2.5	ADJUST WORKSTATION TO PERSONAL PREFERENCE																			X	X	X	X			Ø5/18/87
A1.6.2.6	CHECK WORKSTATION FOR PROPER CONFIGURATION, USABILITY, AND SATISFACTORY STATUS																			X	X	X	X			Ø5/18/87
A1.6.2.7	SET UP WORKSTATION ADAPTATION PARAMETERS																			X	X	X	X			Ø5/18/87
A1.6.2.8	REVIEW BRIEFING CHECKLIST/ NOTES TO ASSURE COMPLETENESS OF BRIEFING COVERAGE																			X	X	X	X			Ø5/18/87
A1.6.2.9	REQUEST IMPLEMENTATION OF PROGRAMMED PERSONAL PREFERENCE ADJUSTMENTS																			X	X	X	X			Ø5/18/87
A1.6.2.1Ø	DETERMINE IF READY TO ACCEPT CONTROL RESPONSIBILITY																			X	X	X	X			Ø5/18/87
A1.6.2.75	REVIEW CURRENT AND PROJECTED TRAFFIC STATUS/ WEATHER																			X	X					Ø6/29/87
A1.6.3	RESPONDING TO TRANSIENT COMPUTER FAILURES																			X	X	X	X			Ø5/18/87
A1.6.3.1	DETECT NON-ACCEPTANCE OF INPUT DATA																			X	X	X	X			Ø5/18/87
A1.6.3.2	INFORM SUPERVISOR OF TRANSIENT EQUIPMENT FAILURE	V			M			S												X	X	X	X			Ø5/18/87

TASK STATEMENTS

Task Number	Task Statement	Coordination Media				Coordinatees																Transition State					Revision Date
		Voice	Function	Mail	Automated Coord.	ISSS\TAAS Controller	Area Supervisor	Area Manager	Flight Service	Traffic Management	Mission Coordinator	Airway Facility/DSC	Meteorologist	Pilot	Tower Controller/Sup	Central Flow Control	Aeronautical Radio	Base Operations	Other Coordination			ISSS	TAAS	ACCC	AERA 1	AERA 2	AERA 3	
A1.6.4	EXECUTING BACKUP PROCEDURES FOR SECTOR SUITE FAILURES																					X	X	X	X		05/18/87
A1.6.4.1	DETECT OCCURRENCE OF SECTOR SUITE FAILURE																					X	X	X	X		05/18/87
A1.6.4.2	OBSERVE SECTOR SUITE DATA BASE RESTORATION COMPLETION MESSAGE																					X	X	X	X		05/18/87
A1.6.4.3	FORWARD NOTICE OF EQUIPMENT STATUS	V			M		C	S		F	T				P	T						X	X	X	X		05/18/87
A1.6.4.4	RECEIVE STATUS OF SECTOR SUITE FAILURE FROM CONTROLLER / SUPERVISOR	V			M		C	S														X	X	X	X		06/29/87
A1.6.4.5	REQUEST SPECIFIED DISPLAY DATA BE PRESENTED ON AND CONTROLLED AT A SPECIFIC COMMON CONSOLE																					X	X	X	X		06/02/88
A1.6.5	EXECUTING BACKUP PROCEDURES FOR TAAS FAILURES																						X				06/01/87
A1.6.5.4	VERIFY COMPUTER ACTION DURING TRANSITION STAGES	V						S					A									X	X	X	X		06/29/87
A1.6.5.6	RECEIVE CONFIRMATION OF COMPUTER ACTION DURING TRANSITION STAGES	V					C	S					A			T						X	X	X	X		06/29/87
A1.6.5.75	DETECT OCCURRENCE OF TAAS FAILURE																						X				06/23/87
A1.6.5.76	REVERT TO TAAS BACKUP PROCEDURES (TBD)	V						S															X				06/23/87
A1.6.5.77	REVERT TO TAAS EMERGENCY MODE PROCEDURES (TBD)	V						S															X				06/23/87
A1.6.5.78	REVERT TO TAAS REDUCED CAPABILITY MODE PROCEDURES (TBD)	V						S															X				06/23/87
A1.6.6	EXECUTING BACKUP NAVAID PROCEDURES																					X	X	X	X		05/18/87
A1.6.6.1	DETERMINE AIRCRAFT NEEDING SUBSTITUTE ROUTING																					X	X	X	X		05/18/87
A1.6.6.2	REVIEW STATUS OF QUESTIONABLE NAVAID	V	F					S		F					P				O			X	X	X	X		05/18/87
A1.6.6.3	OBSERVE SUBSTITUTE ROUTING ON DISPLAY																					X	X	X	X		05/18/87
A1.6.6.4	RECEIVE NOTICE OF NAVAID STATUS	V			M		C	S		F					P	T						X	X	X	X		05/18/87
A1.6.6.5	RECEIVE SUBSTITUTE ROUTING	V			M		C	S														X	X	X	X		05/18/87

Task Number	Task Statement	Coordination Media				Coordinatees																										Transition State						Revision Date
		Voice		Function		Mail		Automated Coord.		ISSS\TAAS Controller		Area Supervisor		Area Manager		Flight Service		Traffic Management		Mission Coordinator		Airway Facility/DSC		Meteorologist		Pilot		Tower Controller/Sup		Central Flow Control		Aeronautical Radio		Base Operations		Other Coordination		ISSS		TAAS		ACCC		AERA 1		AERA 2		AERA 3	
A1.6.6.6	RECEIVE CANCELLATION OF SUBSTITUTE ROUTING	V				M				C		S																						X		X		X		X						05/18/87
A1.6.6.7	FORWARD NAVAID STATUS TO ANOTHER CONTROLLER/ SUPERVISOR/ PILOT	V				M				C		S														P		T						X		X		X		X						05/18/87
A1.6.6.8	FORWARD SUBSTITUTE ROUTING	V				M				C																P								X		X		X		X						06/02/88
A1.6.6.9	DELETE PREVIOUS SUBSTITUTE ROUTING	V				M				C																P								X		X		X		X						06/02/88
A1.6.6.10	DISCUSS APPROPRIATENESS WITH SUPERVISOR OF RELEASING EQUIPMENT TO MAINTENANCE	V										S																						X		X		X		X						05/18/87
A1.6.6.11	REVIEW NEED/ CANCELLATION OF SUBSTITUTE ROUTING WITH SUPERVISOR	V										S																						X		X		X		X						05/20/87
A1.6.6.12	RECEIVE SUPERVISOR NOTICE OF EQUIPMENT RELEASED TO MAINTENANCE	V				M						S																						X		X		X		X						05/18/87
A1.6.7	EXECUTING BACKUP PROCEDURES FOR COMMUNICATION FAILURES																																	X		X		X		X						05/18/87
A1.6.7.1	DETECT COMMUNICATION FAILURE																																	X		X		X		X						05/18/87
A1.6.7.2	FORWARD ALTERNATE COMMUNICATION PATH	V				M				C		S																T						X		X		X		X						05/18/87
A1.6.7.3	RECEIVE NEW FREQUENCY ASSIGNMENT	V				M						S																						X		X		X		X						05/18/87
A1.6.7.4	FORWARD NOTICE OF COMMUNICATION STATUS	V				M				C		S																						X		X		X		X						05/18/87
A1.6.7.5	FORWARD NEW FREQUENCY ASSIGNMENT TO ANOTHER CONTROLLER/SUPERVISOR	V				M				C		S														P		T						X		X		X		X						05/18/87
A1.6.7.6	RECEIVE NOTICE OF ALTERNATE COMMUNICATION PATH	V				M				C		S																T						X		X		X		X						05/18/87
A1.6.8	MANAGING PERSONAL WORKLOAD																																	X		X		X		X						05/18/87
A1.6.8.1	DETERMINE IMPENDING CONTROLLER OVERLOAD																																	X		X		X		X						05/18/87
A1.6.8.3	REQUEST ASSISTANCE OR RELIEF	V				M						S																						X		X		X		X						05/18/87
A1.6.8.4	REQUEST FLOW CONTROL BE IMPOSED	V				M						S					T																	X		X		X		X						04/22/87
A1.6.9	PERFORMING PROCEDURES FOR NON-RADAR ENVIRONMENT																																	X		X		X		X						05/18/87
A1.6.9.1	INFORM PILOT OF RADAR CONTACT LOST	V																								P								X		X		X		X						05/18/87
A1.6.9.2	REASSOCIATE DATA BLOCK																																	X		X		X		X						05/18/87

TASK STATEMENTS

Task Number	Task Statement	Coordination Media: Voice	Coordination Media: Function	Coordination Media: Mail	Coordination Media: Automated Coord.	Coordinatees: ISSS\TAAS Controller	Coordinatees: Area Supervisor	Coordinatees: Area Manager	Coordinatees: Flight Service	Coordinatees: Traffic Management	Coordinatees: Mission Coordinator	Coordinatees: Airway Facility/DSC	Coordinatees: Meteorologist	Coordinatees: Pilot	Coordinatees: Tower Controller/Sup	Coordinatees: Central Flow Control	Coordinatees: Aeronautical Radio	Coordinatees: Base Operations	Coordinatees: Other Coordination	Transition State: ISS.	Transition State: TAAS	Transition State: ACCC	Transition State: AERA 1	Transition State: AERA 2	Transition State: AERA 3	Revision Date
A1.6.9.3	OBSERVE DATA BLOCK NOT ASSOCIATED WITH TARGET																			X	X	X	X			05/18/87
A1.6.9.4	TERMINATE RADAR SERVICE TO AIRCRAFT	V												P						X	X	X	X			05/18/87
A1.6.9.5	INITIATE USE OF NON-RADAR SEPARATION STANDARDS																			X	X	X	X			05/18/87
A1.6.9.7	INITIATE USE OF RADAR SEPARATION STANDARDS																			X	X	X	X			05/18/87
A1.6.9.8	REQUEST PILOT POSITION REPORTS	V							F					P					O	X	X	X	X			05/18/87
A1.6.9.9	OBSERVE RETURN OF NORMAL RADAR ENVIRONMENT																			X	X	X	X			04/08/88
A1.6.9.10	OBSERVE AIRCRAFT TRACK IN COAST MODE																			X	X	X	X			04/08/88
A1.6.9.75	REQUEST READOUT OF ASSIGNED/ REPORTED BEACON CODE																				X					07/01/88
A1.6.10	EXECUTING BACKUP PROCEDURES FOR LOSS OF FLIGHT PLAN DATA BASE																			X	X	X	X			05/18/87
A1.6.10.1	OBSERVE MESSAGE ON LOSS OF FLIGHT PLAN DATA BASE																			X	X	X	X			06/02/88
A1.6.10.2	DETECT FAILURE TO UPDATE FLIGHT PLAN DATA BASE																			X	X	X	X			05/18/87
A1.6.10.3	ENTER DISPLAY AMENDMENT MESSAGE ON CONSOLE																			X	X	X	X			05/18/87
A1.6.10.4	ENTER FLIGHT PLAN ON CONSOLE																			X	X	X	X			05/18/87
A1.6.10.5	VERIFY FLIGHT PLAN DATA BASE TRANSITION ACTIVITIES	V			M			S												X	X	X	X			05/18/87
A1.6.11	RESPONDING TO TRANSIENT VSCS FAILURES																			X	X	X	X			05/18/87
A1.6.11.1	DETECT UNRELIABLE VSCS COMMUNICATION																			X	X	X	X			05/18/87
A1.6.11.2	QUERY WHETHER OTHERS ARE RECEIVING AN AIRCRAFT'S TRANSMISSIONS	V			M		C			F				P	T					X	X	X	X			05/18/87
A1.6.11.3	ISSUE ALTERNATE COMMUNICATION FOR AIR/GROUND TRANSMISSION	V												P						X	X	X	X			05/18/87
A1.6.11.4	RECEIVE NOTICE OF TRANSIENT COMMUNICATION FAILURE	V			M			S												X	X	X	X			05/18/87
A1.6.12	RESPONDING TO AIRSPACE RECONFIGURATIONS/ RESECTORIZATIONS																			X	X	X	X			07/01/88

TASK STATEMENTS

Task Number	Task Statement	Coordination Media				Coordinatees																						Transition State						Revision Date
		Voice	Function	Mail	Automated Coord.	ISSS\TAAS Controller	Area Supervisor	Area Manager	Flight Service	Traffic Management	Mission Coordinator	Airway Facility/DSC	Meteorologist	Pilot	Tower Controller/Sup	Central Flow Control	Aeronautical Radio	Base Operations	Other Coordination										ISSS	TAAS	ACCC	AERA 1	AERA 2	AERA 3	
A1.6.12.1	RECEIVE NOTICE TO TAKE OVER AIRSPACE	V		M			S																					X	X	X	X			Ø5/18/87
A1.6.12.2	RECEIVE NOTICE TO PREPARE FOR SECTOR RECONFIGURATION	V		M			S																						X	X	X			Ø7/Ø1/88
A1.6.12.3	RECEIVE NOTICE TO RELEASE AIRSPACE	V		M			S																					X	X	X	X			Ø5/18/87
A1.6.12.4	RECEIVE NOTICE THAT ADJACENT FACILITY IS OPERATIVE	V		M		C	S								T													X	X	X	X			Ø5/18/87
A1.6.12.5	RECEIVE NOTICE THAT ADJACENT FACILITY IS INOPERATIVE	V		M		C	S								T													X	X	X	X			Ø5/18/87
A1.6.12.6	ENTER RECONFIGURATION/ RESECTORIZATION ACCEPTANCE																												X	X	X			Ø6/17/88
A1.6.13	RESPONDING TO SENSOR OUTAGES																											X	X	X	X			Ø5/18/87
A1.6.13.1	RECEIVE NOTICE OF RADAR SENSOR STATUS	V		M		C	S					A			T													X	X	X	X			Ø5/18/87
A1.6.13.2	RECEIVE PROCEDURES TO BE USED TO ACCOMMODATE SENSOR OUTAGE	V		M		C	S			T																		X	X	X	X			Ø5/18/87
A1.6.13.3	PERCEIVE TRACKING OR TRANSPONDER FAILURE																											X	X	X	X			Ø5/20/87
A1.6.13.4	FORWARD NOTICE OF RADAR SENSOR STATUS TO ANOTHER CONTROLLER/ SUPERVISOR	V		M		C	S								T													X	X	X	X			Ø4/22/87

This Page Intentionally Left Blank

This Page Intentionally Left Blank
(Pages B-26 thru B-31 deleted)

EVENT TO SUB-ACTIVITY TRACE

TAAS CONTROLLER SUB-ACTIVITIES		(VOLUME I, APPENDIX A) RELATED TAAS CONTROLLER EVENT
A1.1.1	CHECKING AND EVALUATING SEPARATION	(MOST ALL EVENTS)
A1.1.2	RECEIVING SYSTEM STATUS INFORMATION	TAAS FAILURE, COMMUNICATION FAILURE, NAVAID FAILURE, RADAR SURVEILLANCE SENSOR FAILURE, TRANSIENT COMPUTER FAILURE
A1.1.3	ANALYZING INITIAL REQUESTS FOR CLEARANCES	CLEARANCE DELIVERY
A1.1.4	PROCESSING DEPARTURE/ EN ROUTE TIME INFORMATION	CLEARANCE DELIVERY, EN ROUTE TIME
A1.1.5	PROCESSING REQUESTS FOR FLIGHT FOLLOWING	FLIGHT FOLLOWING REQUEST
A1.1.6	HOUSEKEEPING	(N/A)
A1.2.1	PERFORMING AIRCRAFT CONFLICT RESOLUTION	AIRCRAFT-AIRCRAFT CONFLICT
A1.2.2	PERFORMING MINIMUM SAFE ALTITUDE PROCESSING	MINIMUM SAFE ALTITUDE CONFLICT
A1.2.3	PERFORMING AIRSPACE CONFLICT PROCESSING	IMPENDING AIRSPACE CONFLICT
A1.2.4	ISSUING UNSAFE CONDITION ADVISORIES	CAUTION ALERT
A1.2.5	SUPPRESSING ALERTS	MILITARY TRAINING ROUTE, REFUELING/ EXERCISE/ AIRSHOW
A1.3.1	RESPONDING TO TRAFFIC MANAGEMENT CONSTRAINTS/ FLOW CONFLICTS	ENTERING/ LEAVING AIRBORNE HOLD, CHANGE FLOW PATTERN, FLOW MANAGEMENT, RUNWAY CONFIGURATION CHANGE, SEVERE WEATHER, VISIBILITY REPORT, WIND SHEAR REPORT
A1 3.2	PROCESSING DEVIATIONS	FLIGHT PLAN DEVIATION
A1.3.3	RESPONDING TO SPECIAL USE AIRSPACE EVENTS	ALTRV/ AIRSPACE RESERVATION, SPECIAL USE AIRSPACE

A1.3.4	ESTABLISHING ARRIVAL SEQUENCES	CLEARANCE REQUEST, ENTERING/ LEAVING AIRBORNE HOLD, CHANGE FLOW PATTERN, RUNWAY CONFIGURATION CHANGE, SEQUENCING REQUIRED
A1.3.5	MANAGING DEPARTURE FLOWS	CLEARANCE REQUEST, ENTERING/ LEAVING AIRBORNE HOLD, CHANGE FLOW PATTERN, RUNWAY CONFIGURATION CHANGE
A1.3.6	MONITORING NON-CONTROLLED OBJECTS	AIRSPACE INTRUSION BY NON-CONTROLLED OBJECT, BALLOON/GLIDER
A1.3.7	RESPONDING TO TEMPORARY RELEASE OF AIRSPACE REQUESTS	IMPENDING AIRSPACE CONFLICT, AIRSPACE RELEASE
A1.3.8	REQUESTING TEMPORARY RELEASE OF AIRSPACE	IMPENDING AIRSPACE CONFLICT, AIRCRAFT TO EDGE OF SECTOR, AIRSPACE RELEASE
A1.4.1	PLANNING CLEARANCES	CLEARANCE DELIVERY, CLEARANCE REQUEST, VFR TCA
A1.4.2	RESPONDING TO CONTINGENCIES	OVERDUE AIRCRAFT, AIRCRAFT EMERGENCY - AIRBORNE, NO RADIO, BOMB THREAT, FUEL DUMPING/ JETTISON, HIJACK, MEDICAL EMERGENCY
A1.4.3	RECOGNIZING SPECIAL OPERATIONS	EXPERIMENTAL FLIGHT, HAZARDOUS CARGO, INTERCEPTOR FLIGHT, LAW ENFORCEMENT, LIFEGUARD MISSION, MILITARY TRAINING ROUTE, SPECIAL INTEREST FLIGHT
A1.4.4	REVIEWING FLIGHT PLANS	FILED FLIGHT PLAN
A1.4.5	PROCESSING FLIGHT PLAN AMENDMENTS	AMENDED ALTITUDE/ ROUTE/ DESTINATION
A1.4.6	RECEIVING TRANSFER OF CONTROL/ RADAR IDENTIFICATION	INITIAL CONTACT, AIRCRAFT TO EDGE OF SECTOR, HANDOFF RECEIPT
A1.4.7	INITIATING TRANSFER OF CONTROL/ RADAR IDENTIFICATION	AIRCRAFT TO EDGE OF SECTOR
A1.4.8	ISSUING POINTOUTS	AIRCRAFT TO EDGE OF SECTOR
A1.4.9	RESPONDING TO POINTOUTS	AIRCRAFT TO EDGE OF SECTOR, AIRSPACE RELEASE, POINTOUT RECEIPT
A1.4.10	ISSUING CLEARANCES	CLEARANCE DELIVERY, CLEARANCE REQUEST, VFR TCA

A1.4.12	MANAGING AUTOMATED HANDOFF FEATURES	(N/A)
A1.4.13	ESTABLISHING, MAINTAINING, AND TERMINATING RADIO COMMUNICATIONS	INITIAL CONTACT, ARRIVAL MESSAGE RECEIPT, AIRCRAFT TO EDGE OF SECTOR
A1.4.14	ESTABLISHING/ REESTABLISHING RADAR IDENTIFICATION	CLEARANCE DELIVERY, EN ROUTE TIME, FLIGHT FOLLOWING REQUEST
A1.5.1	RESPONDING TO SIGNIFICANT WEATHER INFORMATION	PIREP, SEVERE WEATHER, SIGMET/ AIRMET
A1.5.2	PROCESSING WEATHER REPORTS	CEILING HEIGHT REPORT, PRESSURE DISPLAY/ REPORT, VISIBILITY REPORT, WIND SHEAR REPORT
A1.6.1	BRIEFING RELIEVING CONTROLLERS	FACILITY CLOSURE, POSITION RELIEF
A1.6.2	ASSUMING POSITION RESPONSIBILITY	FACILITY REOPENING, POSITION RELIEF
A1.6.3	RESPONDING TO TRANSIENT COMPUTER FAILURES	TRANSIENT COMPUTER FAILURE
A1.6.4	EXECUTING BACKUP PROCEDURES FOR SECTOR SUITE FAILURES	SECTOR SUITE FAILURE
A1.6.5	EXECUTING BACKUP PROCEDURES FOR TAAS FAILURES	TAAS FAILURE
A1.6.6	EXECUTING BACKUP NAVAID PROCEDURES	NAVAID FAILURE
A1.6.7	EXECUTING BACKUP PROCEDURES FOR COMMUNICATION FAILURES	COMMUNICATION FAILURE
A1.6.8	MANAGING PERSONAL WORKLOAD	SECTOR SUITE FAILURE, CONTROLLER OVERLOAD
A1.6.9	PERFORMING PROCEDURES FOR NON-RADAR ENVIRONMENT	RADAR SURVEILLANCE SENSOR FAILURE
A1.6.10	EXECUTING BACKUP PROCEDURES FOR LOSS OF FLIGHT PLAN DATA BASE	FLIGHT PLAN DATA BASE FAILURE
A1.6.11	RESPONDING TO TRANSIENT VSCS FAILURES	TRANSIENT COMMUNICATION FAILURE
A1.6.12	RESPONDING TO AIRSPACE	AIRSPACE RELEASE, FACILITY CLOSURE,

	RECONFIGURATIONS/ RESECTORIZATIONS	FACILITY REOPENING, CONTROLLER OVERLOAD
A1.6.13	RESPONDING TO SENSOR OUTAGES	RADAR SURVEILLANCE SENSOR FAILURE

APPENDIX C

USER INTERFACE LANGUAGE

The User Interface Language (UIL) includes a data object hierarchy comprised of Logical Display Contents (i.e., User Display Language) and Input Messages (i.e., User Input Language). The Logical Display Contents refer to messages output to the terminal controller at the Sector Suite workstation in the Terminal Advanced Automation System of the Advanced Automation System. These messages are output to the controller in the form of graphical displays, alphanumeric displays, and alerts/alarms or other signals for controller attention. The Input Messages refer to data and control messages entered by the controller to the system. This listing excludes messages not used by the terminal controller, and non-operational messages such as those related to training. Reference Volume I, Section 3.3.

SECTOR SUITE LOGICAL DISPLAY CONTENTS

Table C-1 presents the Sector Suite Logical Display contents. Following are the notations employed in Table C-1:

=		Is defined as
or	=	Exclusive "or"
and	=	And
( )	=	Message items form a group
{ }	=	Multiple iterations of a message item. Numbers added in the form X{ }Y indicate at least X but not more than Y iterations of the message. By default, X = 0 and Y = no upper limit defined.
[ ]	=	Optional item (displayed or not displayed at controller's choice)
^ ^	=	Mandatory message item if applicable
* *	=	Comment
@	=	Reference:

SLS	=	Advanced Automation System, System Level Specification, 28 August 1987 [21] (Citations are by AP paragraph)
Task Analysis	=	Derived by task analysis
ARTS Functionality	=	Inclusion of present ARTS functionality

Table C-1. Logical Display Contents

```
        NOTE:  The symbols ! and * are used to reflect substantive
               and nonsubstantive changes respectively.


Data_Display =
          Situation_Display
     or   Flight_Data_Display
     or   Alert_And_Resolution_Display
     or   Special_Lists
     or   Message_Composition_And_Response_Display
     or   Airport_Environmental_Data_Display  *radar approach control*
     or   System_Status_Data_Display
     or   Static_Information_Display
     or   Controller_Notepad_Display
     or   Suppressed_Display_List_Display
     @    SLS Table 40.3-14
     or   VSCS_Display
!    @    SLS 3 2.2.1.9.2 1.2, 40.3.1 2
-------------------------------------------------------------------------
-------------------------------------------------------------------------
Situation_Display =
          (Target/Track_Descriptor)
     and (Weather_Descriptor)
     and (Background_Descriptor)
     and (Slant_Range_Indicator  *to support approach control Situation
               Display requirements*
     or   Ground_Range_Indicator)
*    @    SLS 3.7.1.1.3.2.6, 3.7.1.2.1.1.1.3, 40.3.7.1 2.1.1.1
!
     and  Time  *on main display for radar controller*
     and  Operational_Position_Designator  *radar controller*
*    @    SLS 3 7.1 2 1 1.a, Table 40 3-10
!    and  Geographic_Tagging  *results of controller entered graphics and
!              alphanumeric strings*
!    @    SLS 3.7.1 2.1.1.1 14, 40 3.7.1.2.1 1 1
-------------------------------------------------------------------------
     Target/Track_Descriptor =
               Position_Symbol
          and [Data_Block]
*         and [Position_History]
*         @    SLS 3.7.1 2.1.1.1.3, 3.7.1.2.1.1 11, 40 3.7 1 2 1.1.1
-------------------------------------------------------------------------
          Position_Symbol =
                    Target_Position_Symbol
*              or  (Track_Position_Symbol  *track status*
*              and  Track_Vector)  *velocity/ distance*
               and [Hold_Character]  *hold list association*
*              @    SLS 3.7.1.2.1.1 1.3, 3.7 1.2.1.1.1.3.e, Table 40.3-
                         9/10/11, 40.3.7 1.2 1.1 1
-------------------------------------------------------------------------
```

Table C-1. Logical Display Contents (Continued)

```
                    Target_Position_Symbol =
                        (Primary_Target_Class
                    or   Beacon_Target_Category)
                    and  Ident_Indicator
*                   and ^Aircraft_Halo^
*                   @    SLS 3.7.1.2.1.1.1.3.a/b, 3.7.1.2.1.1.1.15, Table
*                             40.3-9/10, 40.3.7.1.2.1.1.1
-------------------------------------------------------------------------
                    Ident_Indicator =
                              Latitude/Longitude_Position_Indicator
                         or   Callsign
                         or   Tabular_Line_Identifier
                         or   Computer_Identification
                         or   Beacon_Code
*                        or   Mode_S_Indicator/Mode_S_Data_Link_Indicator
*                        @    SLS 3.7.1.2.1.1.1.3.au, 6.2, Task Analysis
-------------------------------------------------------------------------
                Track_Position_Symbol =
                         [Controlling_Sector/Facility]
                    and [Track_Status]
                    and [Handoff_Indicator]
!                   and  FDB/PDB_Data
*                   @    SLS 3.7.1.2.1.1.1.3, 3.7.1.2.1.1.1.3.c/d/f,
*                             40.3.7.1.2.1.1.1
-------------------------------------------------------------------------
                    Track_Status =
                              Hold_Character  *hold list association*
                         or   Coast_Indicator
                         or   Suspend_Status
!
                         @    SLS 3.7.1.1.3.2.4, 3.7.1.1.3.2.6,
*                                 3.7.1.2.1.1.1.3.d, 40.3.7.1.1.3.2,
*                                 40.3.7.1.2.1.1.1, 40.3.7.1.4.3.2.b
-------------------------------------------------------------------------
                    Handoff_Indicator =
                              Receiving_Sector_ID
*                        @    SLS 3.7.1.2.1.1.1.3.f, 40.3.7.1.2.1.1.1
-------------------------------------------------------------------------
                Track_Vector =
                         (Track_Velocity_Vector
                    or   Track_Distance_Vector)
                    and  Vector_Type_Indicator
*                   @    SLS 3.7.1.2.1.1.1.4, 40.3.7.1.2.1.1.1
-------------------------------------------------------------------------
```

Table C-1. Logical Display Contents (Continued)

```
          Data_Block =
                    [Leader_Line]
               and (Full_Data_Block
               or   Limited_Data_Block
               or   Partial_Data_Block)
*              @    SLS 3.7.1.2.1.1.1.3, Table 4Ø.3-11, 4Ø.3.7.1.2.1.1.1
               and [Controlling_Sector/Facility]
               and [Track_Status]
               and [Handoff_Indicator]
*              @    SLS 3.7.1.2.1.1.1.3.c/d/f, 4Ø.3.7.1.2.1.1.1
-------------------------------------------------------------------------
               Leader_Line =
                        [Controlling_Sector/Facility]
                    and [Track_Status]
*                   @    SLS 3.7.1.2.1.1.1.3.c/d/f, 4Ø.3.7.1.2.1.1.1
-------------------------------------------------------------------------
               Full_Data_Block =
                         Callsign
                    and (Mode_C_Altitude
                    or  (Pilot-Reported_Altitude
                    and  Indication_Of_Pilot-Reported_Altitude))
                    and ^Handoff_Status/Indicator^
                    and [Aircraft_Type]
                    and (Assigned_Altitude
                    or   Interim_Altitude)
                    and ^Altitude_Nonconformance_Indicator^
                    and [Computer_Identification]
                    and{[Scratch_Pad_Data]}3
                    and ^Heavy_Jet_Indicator^
                    and ^Exception_Beacon_Code^
                    and ^Conflict_Alert_Indicator^
                    and ^Minimum_Safe_Altitude_Warning^  *MSAW*
                    and ^Aircraft_Special_Condition^  *emergency, hijack,
                              radio failure, suspect aircraft, etc.)
                    and ^Transponder_Failure_Notice^
                    and  VFR_Indicator
                    and([Entry/Exit_Fix]
                    or  [Overflight_Indicator])
                    and  Destination_Airport
                    and  Ground_Speed
                    and ^Pointout_Indicator^
                    and ^MSAW/CA_Suppression_Indication^
                    and ^Mode_S_Indicator_And/Or_Mode_S_Data_Link_Indicator^
                    and ^Handoff_Alert_Indication^
                    and  Track_Status
                    and  Controlling_Sector/Facility_Identification
*                   @    SLS 3.7.1.1.3.2.7, 3.7.1.2.1.1.1.3.ac-ae,
*                             4Ø.3.7.1.2.1.1.1
```

Table C-1. Logical Display Contents (Continued)

```
                Full_Data_Block (continued) =
                     and ^Unsuccessful_Departure_Message_Indicator^
!                    @    SLS 4Ø.3.7.1.2.1.1.1.b
!                    and ^Failure_To_Transmit_Track_Data^
!                    @    SLS 3.7.1.2.1.1.1.3.cf, 4Ø.3.7.1.2.1.1.1
-------------------------------------------------------------------------
                    Handoff_Status/Indicator =
!*                            Receiving_Sector/Position_ID
                         and (Initiated
                         or   Accepted
                         or   Retracted
                         or   Rejected)
                         @    SLS 3.7.1.2.1.1.1.3.ba/f, 3.7.1.2.1.2.1.a/t,
*                                4Ø.3.7.1.2.1.1.1
-------------------------------------------------------------------------
                    Altitude_Nonconformance_Indicator =
                              Reported_Versus_Assigned_Altitude_
                                   Indication
                         and ^Mode_C_Reasonableness_Check_Failure_
                                   Indication^
*                        @    SLS 3.7.1.2.1.1.1.3.bb, 4Ø.3.7.1.2.1.1.1
-------------------------------------------------------------------------
                    Exception_Beacon_Code =
                              Reported_Versus_Assigned_Beacon_Code/
                                   Mode_S_Address_Difference
*                        @    SLS 3.7.1.2.1.1.1.3.bc, 4Ø.3.7.1.2.1.1.1
-------------------------------------------------------------------------
!                   Point_out_Indicator =
!                             Receiving_Sector/Position_ID
!                        and (Accept
!                        or   Reject
!                        or   No_Acceptance_Action)
!                        @    SLS 3.7.1.1.3.8, 3.7.1.2.1.1.1.3.bf/bg,
!                                4Ø.3.7.1.2.1.1
-------------------------------------------------------------------------
                    Handoff_Alert_Indication =
                              Handoff_Not_Accepted
                         or   Auto_Handoff_Inhibited
*                        @    SLS 3.7.1.2.1.1.1.3.bi, 4Ø.3.7.1.1.3.2.e,
*                                4Ø.3.7.1.2.1.1.1
-------------------------------------------------------------------------
                Limited_Data_Block =
                     [Mode_3/A_Beacon_Code]
                    and ^Mode_S_Indicator_And/Or_Mode_S_Data_Link_Indicator^
                    and ^Mode_C_Altitude^
                    and [Ground_Speed]
                    and ^Aircraft_Special_Condition^  *emergency, hijack,
                              radio failure, suspect aircraft, etc.)
*                   @    SLS 3.7.1.2.1.1.1.3, 4Ø.3.7.1.2.1.1.1
-------------------------------------------------------------------------
```

Table C-1. Logical Display Contents (Continued)

```
                Partial_Data_Block =
                        (Mode_C_Altitude
                    or  (Pilot-Reported_Altitude
                    and  Indication_Of_Pilot-Reported_Altitude))
                    and ^Handoff_Status/Indicator^
                    and (Assigned_Altitude
                    or   Interim_Altitude)
                    and  Ground_Speed
                    and([Scratch_Pad_Data])
                    and ^Heavy_Jet_Indicator^
                    and  Aircraft_Type
                    and [Overflight_Indicator]
                    and  Destination_Airport
                    and ^Aircraft_Special_Condition^  *emergency, hijack,
                              radio failure, suspect aircraft, etc.)
                    and  Track_Status
                    and  Controlling_Sector/Facility
*                   @    SLS 3.7.1.2.1.1.1.3, 40.3.7.1.2.1.1.1
-------------------------------------------------------------------------
     Weather_Descriptor =
             ([Graphic_ATC_Radar_Weather])
*         @    SLS 3.7.1.2.1.1.1.7, 40.3.7.1.1.3.5, 40.3.7.1.2.1.1.1
-------------------------------------------------------------------------
          Graphic_ATC_Radar_Weather =
                 ([Precipitation_Intensity])3/6  *geographic weather
                       areas*
*              @    SLS 3.7.1.2.1.1.1.7, Table 40.3-6/10/11,
*                       40.3.7.1.1.3.5, 40.3.7.1.2.1.1.1
-------------------------------------------------------------------------
     Background_Descriptor =
              (Geographic_Map_Data)
          and [Range_Rings]
          and (Radar_Strobe)
!
          and [Longitudinal_Scale]
          @    SLS 3.7.1.2.1.1.1.2, 3.7.1.2.1.1.1.5, 3.7.1.2.1.1.1.6,
*                  3.7.1.2.1.1.1.12, 3.7.1.2.1.1.1.13, Table 40.3-9/10/11,
*                  40.3.7.1.2.1.1.1
-------------------------------------------------------------------------
          Geographic_Map_Data =
                  (Group_Of_Fixes)
                and (Group_Of_Airways)
                and (Sector_Boundary)  *grouped by altitude*
                and (Special_Use_Airspace_Boundary)
                and (Airport)
                and (Obstruction)
                and (Fix)
                and (Minimum_Vector_Altitude)  *MVA*
                and (Military_Route)
```

Table C-1. Logical Display Contents (Continued)

```
          Geographic_Map_Data (continued) =
               and (Holding_Pattern_Airspace)
               and  TBD
*              @    SLS 3.7.1.2.1.1.1.2, 40.3.7.1.2.1.1.1
!              and (Navigational_Aid)
!              and  Final_Approach_Course
!              @    SLS Table 40.3-11
-------------------------------------------------------------------------
               Special_Use_Airspace_Boundary =
                         Airspace_ID
                    and (Special_Use_Airspace_Boundary)
                    and [Activation_Period]
                    and [Altitude_Limits]
                    and [Controlling_Agency]
*                   @    SLS 3.7.1.2.1.1.1.2, 40.3.7.1.2.1.1.1
-------------------------------------------------------------------------
          Radar_Strobe =
                   [Beacon_Radar_Strobe]
               and [Search_Radar_Strobe]
*              @    SLS 3.7.1.2.1.1.3.1.3, 3.7.1.2.1.1.1.5, 3.7.1.2.1.1.1.6,
*                   Table 40.3-11, 40.3.7.1.2.1.1.1
-------------------------------------------------------------------------
!    Geographic_Tagging =
!              Line
!         and  Circle
!         and  Arc
!         and  Polygon
!         and  Alphanumeric_String
!         @    SLS 3.7.1.2.1.1.1.14, 40.3.7.1.2.1.1.1
-------------------------------------------------------------------------
Flight_Data_Display =
          Flight_Data_Area
     and  Flight_Data_Readout_Area
*    @    SLS 3.7.1.2.1.1.2, 40.3.7.1.2.1.1.2
     and  Time  *on main display for non-radar controller*
     and  Operational_Position_Designator  *non-radar controller*
*    @    SLS 3.7.1.2.1.1.a, 40.3.7.1.2.1.1
-------------------------------------------------------------------------
     Flight_Data_Area =
               (Posting_List_Header)
!         @    SLS 3.7.1.1.3.3.1.4, 40.3.7.1.2.1.1.2
*         and (Flight_Data_Entry)  *en route, departure, arrival*
          and (Flight_Data_Entry_Notation)
*         @    SLS 3.7.1.1.3.3.2.5, 3.7.1.2.1.1.2, 40.3.7.1.2.1.1.2
          and (Resectorization_Support_FDE_Indication)  *emphasis*
!         and  Resectorization_Prompt
*         @    SLS 3.7.1.1.3.9.1, 40.3.7.1.1.3.9.1
-------------------------------------------------------------------------
```

Table J-1. Logical Display Contents (Continued)

```
          Flight_Data_Entry =
                [Computer_Identification]
              and  IFR/VFR_Indicator
              and  Callsign
              and ^Heavy_Jet_Indicator^
              and ^Number_Of_Aircraft^
              and  Aircraft_Type
              and ^Equipment_Qualifier^
              and  Beacon_Code
              and [True_Airspeed]
              and  Assigned_Altitude
              and  Interim_Altitude
              and ^Reported_Altitude^
              and ^Mode-C_Altitude^
              and  Requested Altitude
              and  Route_Information  *preferential route, route of
*                       flight, SWAP reroute, sector rerouting, remarks,
*                       insufficient display area indicator*
              and (Controlling_Sector
              or   Controlling_Facility)
              and ^Altitude_Nonconformance_Indicator^
              and  Estimated_Ground_Speed
              and  Previous_Posted_Fix
              and  Time_At_Previous_Posted_Fix
              and  Posted_Fix
              and  CTA_At_Posted_Fix
              and  Coordination_Indicator
              and (Arrival_Arrow
              or   Departure_Arrow)
              and  Proposed_Departure_Time
              and  Actual_Departure_Time
              and  CTA_At_Previous_Fix
              and  Estimated_Time_Of_Arrival
              and  Indicated_Airspeed
              and [Aircraft_Model_Number]
              and  Estimated_Elapsed_Time_To_Destination
              and  Alternative_Destination
              and  Runway
              and  Mach_Speed
              and  NOPAR_Indicator
              and  Remarks_Indicator
              and ^Expect_Departure_Clearance_Time^
              and  Destination
              and  Departure_Point
              and  Control_Information
*             ©    SLS Table 3.7-1, 3.7.1.1.3.2.7, 3.7.1.1.3.3.1.2,
*                       3.7.1.1.3.3.3, 3.7.1.1.3.4.2.3, 3.7.1.2.1.1.2.1,
*                       40.3.7.1.2.1.1.2.1
```

Table C-1. Logical Display Contents (Continued)

```
          Flight_Data_Entry (continued) =
!              and (Flight_Identification
!              and  Field_Identifier
!              and  New_Flight_Data)
!              @    SLS 3.7.1 2.1.1.2.c, 40.3.7.1.2.1.1.2.c
-------------------------------------------------------------------------
          Flight_Data_Entry_Notation =  *FDEN*
                    Exception_Beacon_Code  *emergency, hijack, radio
                         failure, suspect aircraft*
               and  Conflict_Alert
               and  Minimum_Safe_Altitude_Warning  *MSAW*
               and  Transfer_Of_Track_Control_Data_And/Or_Radar_Service_
                         Provided/Terminated/Lost  *FDEN absence denotes
                         radar service not yet provided*
!              and  Data_Block_Pointout_Initiated/Accepted/Rejected
!                        *includes receiving sector/ facility ID*
               and  Route_Data_Field_FDEN  *radar vector heading, direct
                         route clearance, DME arc, radius clearance*
               and  Data_Field_Not_Forwarded_To_Required_Sector/Facility
                         *includes intended receiving sector/facility
                         identification*
               and  Assigned_Altitude_FDEN  *verified assigned altitude,
                         altitude restriction, assigned altitude
                         inappropriate for direction of flight, fix
                         crossing time*
               and  Reported_Altitude_FDEN  *controller request for a
                         pilot to report reaching/leaving an altitude,
                         altitude has been reached/vacated, pilot-reported
                         altitude different from assigned altitude/  .
*                        coordinated with next sector*
               and  Record_Of_Clearances/Instructions_Delivered
               and  Speed_Restriction_Assigned
               and  Holding_Clearance/Instructions_Issued
               and  Future_Action_Required  *regarding FDE field tagged*
               and (Flight_Changed_To_Next_Frequency
               and [New_Frequency]
               and [Frequency_Time_Change])
               and (VFR_Flight_Following_Provided
               or   Stage_II_Service_Provided
               or   TCA_Service_Provided
               or   TRSA_Service_Provided
               or   ARSA_Service_Provided)
               and  IFR_Flight_Plan_Cancelled
               and (Arrival_Time
               and  Clearance_Void_Time)
               and  Posted_Fix_FDEN  *pilot estimate at fix, actual time at
                         fix*
```

Table C-1. Logical Display Contents (Continued)

```
          Flight_Data_Entry_Notation (continued) =  *FDEN*
!              and((SWAP
!              or   Preferential_Route)
!              and  Associated_Segment_Of_Filed_Route)
!              @    SLS 3.7.1.2.1.1.2.1.a-u, 40.3.7.1.2.1.1.2.1
-------------------------------------------------------------------------
     Flight_Data_Readout_Area =
               Flight_Data  *one flight*
*         @    SLS 3.7.1.2.1.1.2, 40.3.7.1.2.1.1.2
-------------------------------------------------------------------------
Alert_And_Resolution_Display =
        {^Callsign^}
*    and (Alert_Type
*    and  Alert_Condition)
*    @    SLS 3.7.1.2.1.1.4, 40.3.7.1.2.1.1.3
     and ^Aural_Alarm^  *MSAW*
     @    SLS 3.7.1.1.3.5.2
-------------------------------------------------------------------------
     Alert_Type =
               Conflict_Alert
*         or   Minimum_Safe_Altitude_Warning  *MSAW airspace*
          or   Aircraft_Emergency
*         @    SLS 3.7.1.2.1.1.4, 40.3.7.1.1.3.4.2
-------------------------------------------------------------------------
!         Aircraft_Emergency =
!                   Callsign
!              and  Condition
!              and  Beacon Code
!              @    SLS 3.7.1.2.1.1.4, 40.3.7.1.2.1.1.3
-------------------------------------------------------------------------
Special_Lists =
         [Departure_List]
     and [Inbound_List]
     and [Coast/Hold/Suspend_List]
     and [Auto_Handoff_Inhibit_List]
     and  Automatic_Data_Update_Indication  *emphasis*
*    @    SLS 40.3.7.1.2.1.1.4, Table 40.3-9, 40.3.7.1.2.1.1.4
-------------------------------------------------------------------------
     Departure_List =
*             {Airport_Sublist_Header}
          and {Callsign}
!         and {Field_Of_Flight_Data}
*         @    SLS 3.7.1.2.1.1.5.1, 40.3.7.1.2.1.1.4.1
-------------------------------------------------------------------------
     Inbound_List =
               {Callsign
!         a    {Field_Of_Flight_Data}
*         @    SLS 3.7.1.2.1.1.5.2, 40.3.7.1.2.1.1.4.2
-------------------------------------------------------------------------
```

Table C-1. Logical Display Contents (Continued)

```
     Coast/Hold/Suspend_List =
               (Callsign)
          and (Coast
*         or  (Hold_Character)
          or   Suspend)
*         and (Field_Of_Flight_Data)  *assigned altitude, time, etc.*
*         @    SLS 3.7.1.2.1.1.5.3, 40.3.7.1.2.1.1.4.3
-------------------------------------------------------------------------
     Auto_Handoff_Inhibit_List =
               (Sector_ID)  *auto handoff inhibited*
          and (Facility_ID)  *auto handoff inhibited*
!         and (Aircraft_Identification)  *auto handoff inhibited*
*         @    SLS 3.7.1 2.1.1.5.7, 40.3.7.1.2.1.1.4.4
-------------------------------------------------------------------------
Message_Composition_And_Response_Display =
          Message_Composition_Display
     and  Response_Display
*    @    SLS 3.7.1.2.1.1.6, 40.3.7.1.2.1.1.5
-------------------------------------------------------------------------
     Message_Composition_Display =
*              [Message_Composition_Menu]  *message composition choices*
*         and [Message_Composition_Template]  *form-filling dialog, Quick
*                   Reference message entry format*
          and  Message_Preview_Area
*         @    SLS 3.7.1.2.1.1.6, 3.7.1.2.1.2.aa, 40.3.7.1.2.1.1.5
-------------------------------------------------------------------------
     Response_Display =
               System_Message_Readout
*         @    Task Analysis/ ARTS Functionality
          and  System_Query_Response
          and  System_Processing_Response
          and [Message_Waiting_Indicator]
          and [Priority_Receipt_Acknowledgement]
*         @    SLS 3.7.1.1.3.7.1, 3.7.1.2.1.1.6, 3.7.1.2.1.2.ae,
*                  40.3.7.1.1.3.7.2, 40.3.7.1.2.1.1.5
-------------------------------------------------------------------------
          System_Message_Readout =
                    Departure_Message  *emphasized FDB*
               and  Assigned/Reported_Beacon_Code
               and  TBD
               @    Task Analysis/ ARTS Functionality
-------------------------------------------------------------------------
!         Message_Waiting_Indicator =
!                   Incoming_Message_Receipt
!              and  Incoming_Message_Classification  *priority, standard*
!              and  Total_Number_Of_Messages_In_Queue  *by classification*
!              @    SLS 3.7.1.1.3.7.1, 40.3.7.1.1.3.7.2, 40.3.7.1.2.1.1.5
-------------------------------------------------------------------------
```

Table C-1. Logical Display Contents (Continued)

```
          System_Query_Response =
                    ATC_Mail_Message_Readout
               or   Flight_Plan_Readout
               or   Weather_Data_Readout
               or   Route_Readout
               or   TBD  *other data base information provided in
                          response to controller request*
*              @    SLS 3.7.1.1.4.2.3, 3.7.1.2.1.1.6, 40.3.7.1.2.1.1.5
-------------------------------------------------------------------------
               ATC_Mail_Message_Readout =
                         Date
                    and  Time
                    and  Sender_Identification
                    and  Text_Message
                    @    SLS 3.7.1.1.3.7.1, 40.3.7.1.1.3.7.1
-------------------------------------------------------------------------
          System_Processing_Response =
                   (Message_Accept_Indicator
               or   Message_Reject_Indicator
               or   Message_Error_Indicator)
*              @    SLS 3.7.1.2.1.1.6, 40.3.7.1.2.1.1.5
!
-------------------------------------------------------------------------
Airport_Environmental_Data_Display =
          [Barometric_Pressure]  *DASI, altimeter setting*
     and([Center_Field_Wind_Direction]
     and [Center_Field_Wind_Speed]
     and [Center_Field_Wind_Gust_Speed])
     and [Runway_Visual_Range_Data]
     and [Low_Level_Wind_Shear_Alert_System_Data]
     and [Airport_Information]
*    @    SLS 3.7.1.1.3.7.2, 3.7.1.2.1.1.7, 40.3.7.1.2.1.1.6
     and [Temperature]
     and [Ceiling_Height]
     and [Vortex_Advisory_Data]
     and [Visibility]
*    and ^Airport_Environmental_Alert^
*    and ^ATC_Airport_Equipment_Alert^
*    @    SLS 3.7.1.1.3.7.2, 40.3.7.1.1.3.7.2
-------------------------------------------------------------------------
     Low_Level_Wind_Shear_Alert_System_Data =
               Reporting_Location
          and  Boundary_Surface_Wind_Direction
          and  Boundary_Direction_Wind_Speed
          and  Effect_On_Aircraft_Performance
          and  Update_Time
*         @    SLS 3.7.1.2.1.1.7, 40.3.7.1.2.1.1.6
-------------------------------------------------------------------------
```

Table C-1. Logical Display Contents (Continued)

```
     Runway_Visual_Range_Data =
*              (Runway_Visual_Range)3
          and  Supplementary_Character
          and  Update_Time
*         @    SLS 3.7.1.2.1.1.7, 40.3.7.1.2.1.1.6
-------------------------------------------------------------------------
     Airport_Information =
               (Departure_Route)
          and (Arrival_Route)
          and (Runway_Configuration)  *active arrivals/departures*
          and (Closed_Runway)
          and([Acceptance_Rate])
          and([Outage_And_Repair_Schedule])
          and [Runway_Alert_Data]
          and [Airport_Lighting_Systems_Data]  *runway lighting intensity
*                   update time*  *airport, runway*
*         and [Instrument_Landing_Aids]  *ILS, MLS*  *airport, runway*
          and [Visual_Approach_Slope_Indicator]  *VASI*
          and [ATIS_Character]
          and [ATIS_Message]
          and (Current_NOTAM)  *airport specific*
*         @    SLS 3.7.1.1.3.7.2, 3.7.1.1.10, 3.7.1.2.1.1.7,
*                  40.3.7.1.2.1.1.6
-------------------------------------------------------------------------
          Airport_Lighting_System_Data =
                    Airport_Lighting_System_Status
               and  Update_Time
*              @    SLS 3.7.1.2.1.1.7, 40.3.7.1.2.1.1.6
-------------------------------------------------------------------------
System_Status_Data_Display =
          [Communication_Status]
     and [Equipment_Status]
     and [Sectorization_Data]
     and [Special_Use_Airspace_Status]
     and [Training_In_Progress]
*    and([Special_Activity])
*    and([Computer_Outage])
*    and([Data_Communication_Line_Outage])
*    and([Voice_Communication_Line_Outage])
     and [Usage_Of_Adapted_Routes]
     and [Usage_Of_Operational_Functions]
     and  Update_Indication  *data emphasis*
;    and  TBD
*    @    SLS 3.7.1.2.1.1.8, 40.3.7.1.2.1.1.7
*
-------------------------------------------------------------------------
```

Table C-1. Logical Display Contents (Continued)

```
     Communication_Status =
              (Communication_Channel_Assignment)
          and (Radio_Frequency)
          and((Radio_Equipment_Outage)
          and (Radio_Equipment_Repair_Schedule))
*         @    SLS 3.7.1.2.1.1.8, 40.3.7.1.2.1.1.7
-------------------------------------------------------------------------
     Equipment_Status =
             ((Radar_Equipment_Outage
          and  Radar_Repair_Schedule))
          and((NAVAID_Outage
          and  NAVAID_Repair_Schedule))
          and [NAVAID_Maintenance_Schedule]
*         @    SLS 3.7.1.2.1.1.8, 40.3.7.1.2.1.1.7
-------------------------------------------------------------------------
     Sectorization_Data =
*              Sectorization_Plan_In_Effect  *Terminal Configuration Plan*
          and ^Request_For_Resectorization^
*         @    SLS 3.7.1.2.1.1.8, 40.3.7.1.1.3.9, 40.3.7.1.2.1.1.7
-------------------------------------------------------------------------
     Computer_Outage =
              (Operational_Function_Degradation/Failure)
!         and ^Reduced_Capability_Mode_Indicator^
          and ^Emergency_Mode_Indicator^
          and (TCCC_Interface_Status)
          and (TAAS_Interface_Status)  *adjacent, backup*
          and((TCCC_Stand-Alone_Mode
          or   TCCC_Normal_Mode))
!         and (D-BRITE_Interface_Status)
*         @    SLS 3.7.1.1.1.3.3, 3.7.1.1.7, 3.7.1.1.7.1, 40.3.7.1.1.1.3.3
-------------------------------------------------------------------------
Static_Information_Display =
        [(Controller_Chart)]
      and[(Sectional_Aeronautical_Chart)]
*     and[(Instrument_Approach_Procedure)]  *IAP*
*     and[(STAR/Profile_Descent)]  *standard terminal arrival*
*     and[(SID/Departure_Procedure)]  *standard instrument departure*
      and [North_Atlantic_Route_Chart]
*     and [Pacific_Route_Chart_Composite]
      and[(Substitute_Routing)]
      and [Airman's_Information_Manual]
      and [Air_Traffic_Control,_FAA_Order_7110.65]
      and [Standard_Operating_Procedures]  *SOP*
      and[(Letter_Of_Agreement)]
      and[(Position_Checklist)]
      and[(NAVAID/Sector_Frequency)]
      and [Oceanic_Air_Traffic_Control_FAA_Order_7110.83]
*     @    SLS 3.7.1.2.1.1.9, 40.3.7.1.2.1.1.8
-------------------------------------------------------------------------
```

Table C-1. Logical Display Contents (Concluded)

```
*Controller_Notepad_Display =  *personal electronic scratchpad*
*         (Free-Form_Text_Note)
*     @     SLS 3.7.1.2.1.1.18, 40.3.7.1.2.1.1.11
-------------------------------------------------------------------------
Suppressed_Display_List_Display =
          (Suppressed_Logical_Display)
      and (Suppressed_Special_List)
*     @     SLS 3.7.1.2.1.1.21, 40.3.7.1.2.1.1.12
-------------------------------------------------------------------------
VSCS_Display =
           VSCS_A/G_Display
      and  VSCS_G/G_Display
!     @     SLS 3.2.2 1.9.2.1.2, 40.3.1.2
-------------------------------------------------------------------------
```

CONTROLLER INPUT MESSAGES

Table C-2 presents the messages input by the terminal controller to the TAAS including operational messages (e.g., handoff, track, or status change) and system control messages (e.g., display adjustment). The following notations are used in this table:

=		Is defined as
or	=	Exclusive "or"
and	=	And
( )	=	Message items form a group
{ }	=	Multiple iterations of a message item. Numbers added in the form X{ }Y indicate at least X but not more than Y iterations of the message. By default, X = 0 and Y = no upper limit defined.
[ ]	=	Optional item
* *	=	Comment
@	=	Reference:

SLS	=	Advanced Automation System, System Level Specification, 28 August 1987 [21] (Citations are by AP paragraph)
Task Analysis	=	Derived by task analysis
ARTS Functionality	=	Inclusion of present ARTS functionality

Categories of message entry functions:

TRACK CONTROL

- Transfer of Control
- Data Block Manipulations
- Separation Assurance Control
- Pointout Action
- Interim Altitude

FLIGHT DATA MANIPULATIONS

AERONAUTICAL AND METEOROLOGICAL DATA CHANGES

SYSTEM STATUS CHANGES

DISPLAY CONTROL

- Situation Display Adjustments
- Flight Data Display Manipulations
- Alert and Resolution Display Manipulations
- Special Lists Manipulations
- Message Manipulations
- Airport Environment Data Display Manipulations
- System Status Data Display Manipulations
- Static Information Display Manipulations
- Controller Notepad Display Manipulations
- Sign On/Sign Off
- Parameter Adjustments
- General Display Functions

The Display Control sections include ancillary actions of controllers which previously were reported separately in Appendix B.

Table C-2. Input Messages

```
------------------------------------------------------------------------
------------------------------------------------------------------------

                              TRACK CONTROL

------------------------------------------------------------------------
------------------------------------------------------------------------

TRANSFER OF CONTROL

------------------------------------------------------------------------
*    Accept/Retract/Reject_Handoff =  *assume, reject control*
           (Flight_Identification)
         and [Reject_Indicator]
*        @    SLS 3.7.1.1.3.2.4, 3.7.1.2.1.1.1.3, 3.7.1.2.1.2.1.a,
*                 4Ø.3.7 1.1.3.2.e, 4Ø.3.7.1.2.1.2.b
------------------------------------------------------------------------
*    Initiate_Handoff =  *manually initiate transfer of control*
           Flight_Identification
         and[(Sector
         or   Facility)]
*        @    SLS 3.7.1.1.3.2.8.3, 3.7.1.1.3.3.1.2, 3.7.1.2.1.2.1.c,
*                 4Ø.3.7.1.1.3.2.e, 4Ø.3.7.1.2.1.2.b
------------------------------------------------------------------------
     Enable/Inhibit_Automatic_Handoff =
*           [Flight_Identification]
*        or [(Sector  *all flights to*
*        or   Facility)]  *all flights to*
*        @    SLS 3.7.1.2.1.1.5.7, 3.7.1.2.1.2.1.d, 4Ø.3.7.1.1.3.2.e,
*                 4Ø.3.7.1.2.1.2.b
------------------------------------------------------------------------
     Redirect_Handoff =
           Flight_Identification
         and (Sector
         or   Facility)
*        @    SLS 3.7.1.2.1.2.1.t, 4Ø.3.7.1.2.1.2.b
------------------------------------------------------------------------

DATA BLOCK MANIPULATIONS

------------------------------------------------------------------------
*    Track =  *change tracking status of aircraft*
           Flight_Identification
*        and  Track_Action  *Coast, Start, Drop, Hold, Suspend, TBD*
         and [Track_Start_Position]
         and [Speed]
         and [Heading]
         and [Assigned_Altitude]
```

Table C-2. Input Messages (Continued)

```
     Track (continued) =
*          @     SLS 3.7.1.1.3.2.2, 3.7.1.1.3.2.3, 3.7.1.1.3.2.4,
*                    3.7.1.1.3.2.6, 3.7.1.1.3.2.8.2, 3.7.1.1.3.2.11,
*                    3.7.1.1.3.3.2.6, 3.7.1.2.1.2.1.b, 40.3.7.1.1.3.2.d,
*                    40.3.7.1.1.3.3.2.1, 40.3.7.1.1.3.3.2.6, 40.3.7.1.2.1.2.b
-------------------------------------------------------------------------------
     Force_Data_Block =    *force or remove display*
               Flight_Identification
*           @    SLS 3.7.1.2.1.1.1.3.dd, 3.7.1.2.1.2.1.e, Table 40.3-5,
*                    40.3.7.1.2.1.1.1, 40.3.7.1.2.1.2.b
-------------------------------------------------------------------------------
*    Quick_Look =  *display, terminate*  *TAAS/TCCC positions*
              (Sector_Number)
*          @     SLS 3.7.1.2.1.1.1.3.dc, 3.7.1.2.1.2.1.k, 40.3.7.1.1.3.9.1,
*                    40.3.7.1.2.1.2.b
-------------------------------------------------------------------------------
     Track_Reposition =  *reassociate with target symbol*
               Flight_Identification
          and  New_Coordinate_Position
*          @     SLS 3.7.1.2.1.2.1.1, 40.3.7.1.2.1.2.b
-------------------------------------------------------------------------------

SEPARATION ASSURANCE CONTROL

-------------------------------------------------------------------------------
     Suppress/Restore_Conflict_Alert_Pair =
               Flight_Identification  *Aircraft 1*
          and  Flight_Identification  *Aircraft 2*
          and [Suppress/Restore_Alert_Indicator]
*          @     SLS 3.7.1.1.3.5.1, 3.7.1.2.1.2.1.i, 40.3.7.1.1.3.4.1,
*                    40.3.7.1.2.1.2.b
-------------------------------------------------------------------------------
     Suppress/Restore_MSAW_Alert =
               Flight_Identification
          and [Suppress_Alert_Indicator]
          and [Facility]
*          @     SLS 3.7.1.1.3.5.2, 3.7.1.2.1.2.1.ja, 40.3.7.1.1.3.4.2,
*                    40.3.7.1.2.1.2.b
-------------------------------------------------------------------------------
     Request/Suppress_Track_Velocity_Vector =
               Flight_Identification
          and  Minutes
*          @     SLS 3.7.1.2.1.1.1.4, 40.3.7.1.2.1.1.1
-------------------------------------------------------------------------------
     Request/Suppress_Track_Distance_Vector =
               Flight_Identification
          and  Miles
*          @     SLS 3.7.1.2.1.1.1.4, 40.3.7.1.2.1.1.1
-------------------------------------------------------------------------------
```

Table C-2. Input Messages (Continued)

```
*    Accept_Resectorization =  *terminal airspace*
!            [Ali_Handoffs_Indicator]
*         @    SLS 3.7.1.1.3.9.1, 3.7.1.2.1.2.1.v, 40.3.7.1.1.3.9.1,
*                  40.3.7.1.2.1.2.b
-------------------------------------------------------------------------
!
-------------------------------------------------------------------------
*    Latitude/Longitude_Readout =  *display, delete*
              [Cursor_Position]
          or  [Fix]
          or  [Fix/Radial/Distance]
*         @    SLS 3.7.1.2.1.2.1.w, 40.3.7.1.2.1.2.b
-------------------------------------------------------------------------
     Select_Longitudinal_Scale =
              Location
          and  Miles  *0 - 20*
*         @    SLS 3.7.1.2.1.1.1.13, 40.3.7.1.2.1.1.1
-------------------------------------------------------------------------
*    Enter/Delete_Scratch_Pad_Data  *in Full Data Block*
!*        @    SLS 3.7.1.2.1.1.1 3.bk, 40.3.7.1.2.1.1 1
-------------------------------------------------------------------------
!
!POINTOUT ACTIONS
!
-------------------------------------------------------------------------
!    Initiate_Pointout =  *data block pointout*
!              Flight_Identification
!         and (Sector
!         or   Facility)
!         @    SLS 3.7.1.1.3.8, 3.7.1.2.1.2.1.f, 40.3.7.1.2.1.2.b
-------------------------------------------------------------------------
!    Pointout_Accept/Reject =  *data block pointout*
!              Flight_Identification
!         and [Reject_Indicator]
!         @    SLS 3.7.1.1.3.8, 3.7.1.2.1.2.1.s, 40.3.7.1.2.1.2.b
-------------------------------------------------------------------------

INTERIM ALTITUDE

-------------------------------------------------------------------------
*    Interim_Altitude =  *set, remove*
              Flight_Identification
*         and  Altitude
*         @    SLS 3.7.1.1.3.10, 3.7.1.2.1.2.1.h, 40.3.7.1.2.1.2.b
-------------------------------------------------------------------------
```

Table C-2. Input Messages (Continued)

```
----------------------------------------------------------------------------
----------------------------------------------------------------------------

                        FLIGHT DATA MANIPULATIONS

----------------------------------------------------------------------------
----------------------------------------------------------------------------
     Flight_Data_Amendment =  *IFR or VFR flight plan*
               Flight_Identification
          and  Field_To_Be_Modified  *modify, add to, delete*
          and  New_Data
*         @    SLS 3.7.1.1.3.3.1.1, 3.7.1.1.3.3.2.1, 3.7.1.2.1.2.2.a,
*                  40.3.7.1.1.3.3.1.2, 40.3.7.1.2.1.2.c
----------------------------------------------------------------------------
*    Drop_Flight_Plan_Internal =  *delete FDB/FDE from own facility*
               Flight_Identification
*         @    SLS 3.7.1.2.1.2.2.b, 40.3.7.1.2.1.2.c
----------------------------------------------------------------------------
*    Departure =  *activate a proposed departure or a proposed airfile
*                   flight plan*
               Flight_Identification
          and [Departure_Time]
          and [Assigned_Altitude]
*         @    SLS 3.7.1.2.1.2.2.c, Table 40.3-5, 40.3.7.1.2.1.2.c
----------------------------------------------------------------------------
!    Discrete_Code_Request/Assignment =  *assign, change*
               Flight_Identification
          and([Beacon_Code]
          or  [Code_Subset_Designator])
*         @    SLS 3.7.1.1.3.3.1.6, 3.7.1.1.3.3.2.1, 3.7.1.1.3.3.2.6,
*                  3.7.1.2.1.2.2.d, 40.3.7.1.1.3.2.d, 40.3.7.1.1.3.3.2.1,
*                  40.3.7.1.1.3.3.2.6, 40.3.7.1.2.1.2.c
----------------------------------------------------------------------------
*    Flight_Plan =  *enter IFR plan*  *retrieve, modify, reenter*
               Callsign
          and [Flight_Rules]
          and [Type_Of_Flight]
          and [Number_Of_Aircraft]
          and  Type_Of_Aircraft
          and [Model_Number]
          and [Heavy_Jet_Indicator]
          and  Equipment
*         and (Departure_Point
*         and  Departure_Time)
*         or  (Coordination_Fix
*         and  Coordination_Time/Elapsed_Time_To_Coordinate_Fix)
          and  True_Air_Speed
          and  Altitude
          and  Route
          and [Destination]
```

Table C-2. Input Messages (Continued)

```
     Flight_Plan (continued) =
          and [Estimated_Elapsed_Time_To_Destination]
          and [Alternate_Destination]
          and [Beacon_Code]
          and [Mode_S_Code]
          and [Remarks]
          and [NOPAR_Indicator]
*         @    SLS 3.7.1.2.1.2.2.e, Table 40.3-5, 40.3.7.1.1.3.3.1.1,
*                  40.3.7.1.1.3.3.1.5, 40.3.7.1.2.1.2.c
-------------------------------------------------------------------------
     Hold =  *initiate, modify, cancel* *FDEN*
               Flight_Identification
          and [Fix]
          and [EFC_Time]
          and [Hold_Cancel_Indicator]
          and [Hold_Direction]
          and({[Turns]})
          and({[Leg_Lengths_In_Minutes_Or_Miles]})
          and [Time_Entering_Hold]
          and [Time_Leaving_Hold]
*         @    SLS 3.7.1.1.3.2.4, 3.7.1.2.1.2.2.f, 40.3.7.1.2 1.2.c
-------------------------------------------------------------------------
     Progress_Report =
               Flight_Identification
          and  Fix
*         and [Actual_Time_At_Fix]  *FDEN*
*         and [Pilot_Estimate_At_Fix]  *FDEN*
          and [Next_Fix]
*         and [Pilot_Estimate_At_Next_Fix]  *FDEN*
!         and [Altitude]
*         @    SLS 3.7.1.1.3.2 7, 3.7.1.2.1.2.2.g, 40.3.7.1.2.1.2.c
-------------------------------------------------------------------------
     Reported_Altitude =
               Flight_Identification
*         and (Altitude)
*         and [Indicator_Denoting_Report_Reaching]  *FDEN*
*         and [Indicator_Denoting_Report_Leaving]  *FDEN*
          and [Indicator_Denoting_That_Reported_Altitude_Is_Other_Than_
*                  Assigned_Altitude]  *FDEN*
*         @    SLS 3.7.1.1.3.2.5, 3.7.1.2.1.2.2.h, Table 40.3-5,
*                  40.3.7.1.2.1.2.c
-------------------------------------------------------------------------
     Transfer_Flight_Plan =
              (Flight_Identification)
!         and  Facility  *ARTS*
*         @    SLS 3.7.1.1.3.3.1.8, 3.7.1.2.1.2.2.i, 40.3.7.1.1.3.3.1.6,
*                  40.3.7.1.2.1.2.c
-------------------------------------------------------------------------
```

Table C-2. Input Messages (Continued)

```
     Drop_Flight_Plan =  *delete FDB and FDE from ATC system*
               Flight_Identification  *IFR or VFR*
*         @     SLS 3.7.1.1.3.3.2.1, 3.7.1.2.1.2.2.j, Table 40.3-5,
*                   40.3.7.1.2.1.2.c
-------------------------------------------------------------------------
*    Stereo_Flight_Plan =  *enter*
               Callsign
          and [A/C_Data]
          and [Speed]
          and  Coordination_Time
          and [Altitude]
          and  Stereo_Tag
          and [Remarks]
*         @     SLS 3.7.1.2.1.2.2.k, 40.3.7.1.2.1.2.c
-------------------------------------------------------------------------
     FDE_And_Data_Field_Emphasis =
               Flight_Identification
*         and  Field_To_Be_Emphasized  *full FDE, field, subfield*
*         and  Emphasized_Data  *enter, modify, delete, restore*
*         @     SLS 3.7.1.2.1.1.2, 3.7.1.2.1.2.2.n, Table 40.3-5,
*                   40.3.7.1.2.1.1.2, 40.3.7.1.2.1.2.c
-------------------------------------------------------------------------
*    FDE_Pointout =  *force FDE to another sector*
               Flight_Identification
          and [Sector_Posting_Number)
          and  Sector_Number
*         @     SLS 3.7.1.2.1.2.2.o, Table 40.3-5, 40.3.7.1.2.1.2.c
-------------------------------------------------------------------------
     Request_FDEs =
               Flight_Identification
          and([Sector_Number
        and/or Facility])
          and [Posting_List_Heade.]
*         @     SLS 3.7.1.1.3.3.2.5, 3.7.1.2.1.2.2.p, Table 40.3-5,
*                   40.3.7.1.1.3.3.2.5, 40.3.7.1.2.1.2.c
-------------------------------------------------------------------------
     Runway_Assignment =  *assign, reassign*
               Flight_Identification
          and  Runway
*         @     SLS 3.7.1.2.1.2.2.s, 40.3.7.1.2.1.2.c
-------------------------------------------------------------------------
     Approach_Type =
               Flight_Identification
          and  Approach_Type
*         @     SLS 3.7.1.2.1.2.2.t, 40.3.7.1.2.1.2.c
-------------------------------------------------------------------------
```

Table C-2. Input Messages (Continued)

```
     VFR_Flight_Plan =
*              Aircraft_Identification  *callsign*
          and [A/C_Data]
          and [Beacon_Code]
          and [Departure_Point]
          and [Destination]
          and [True_Airspeed]
          and [Coordination_Fix]
          and [Coordination_Time]
          and [Altitude]
          and [Route]
          and [Estimated_Point_Of_Penetration_Of_ADIZ/DEWIZ_Bounaary]
          and [Elapsed_Time_To_Point_Of_ADIZ/DEWIZ_Penetration]
          and [Remarks]
          and [Heading]
          and [Runway_Assignment]
          and [Estimated_Time_Of_Arrival]
          and [Coordination]
*         @    SLS 3.7.1.1.3.3.2.1, 3.7.1.1.3.3.2.5, 3.7.1.2.1.2.2.u,
*                  40.3.7.1.1.3.3.2.1, 40.3.7.1.2.1.2.c
-------------------------------------------------------------------------
     Altitude_Restriction_Message =  *enter/cancel FDEN, controller
          reminder*
               Flight_Identification
          and([Restriction])
*         @    SLS 3.7.1.2.1.2.2.v, 40.3.7.1.2.1.2.c
-------------------------------------------------------------------------
     Suppress/Restore_Full_Data_Block_And_Flight_Data_Entry =  *on displays
          at own workstation*
               Flight_Identification
*         @    SLS 3.7.1.2.1.2.2.w, 40.3.7.1.2.1.2.c
-------------------------------------------------------------------------
     Request_Flight_Data_Readout =
               Flight_Identification
*         @    SLS 3.7.1.2.1.1.2, Table 40.3-5, 40.3.7.1.2.1.1.2
-------------------------------------------------------------------------
     Airport_VFR_Flight_Plan_Request =
               Callsign
          and [Flight_Status]  *arrival, departure, overflight*
          and [Code_Block_Selection]
          and([CPSD_Coordinates]
          or  [Fix]
          or  [Direction])  *magnetic bearing*
          and [Airport]
*         @    SLS 3.7.1.1.3.3.2.1, 3.7.1.1.3.3.2.6, 3.7.1.2.1.2.2.x,
*                  40.3.7.1.1.3.2.d, 40.3.7.1.1.3.3.2.1,
*                  40.3.7.1.1.3.3.2.6, 40.3.7.1.2.1.2.c
-------------------------------------------------------------------------
```

Table C-2. Input Messages (Continued)

```
*     Flight_Plan =  *enter local IFR plan for intrafacility use*
*                    Aircraft_Identification
!               and [Aircraft_Data]
*               and [Assigned_Beacon_Code]
*               and [Speed]
                and [Entry/Departure_Point]
                and [Exit/Arrival_Point]
!               and([Estimated_Time_Of_Entry]
!               or  [Estimated_Time_Of_Departure])
!               and([Assigned_Altitude]
!               or  [Requested_Altitude]
                and [Route]
                and [Remarks]
                and [Estimated_Time_Arrival]
                and [Coordination]
!               @    SLS Table 40.3-5, 40.3.7.1.2.1.2.c
-------------------------------------------------------------------------
!     Enter/Delete_FDE_Notation =  *FDEN*
!                    Emergency/Hijack/Radio_Failure/Suspect_Aircraft
!               and  Conflict_Alert
!               and  Minimum_Safe_Altitude_Warning  *MSAW*
!               and  Transfer_Of_Track_Control_Data_And/Or_Radar_Service_
!                         Provided/Terminated/Lost  *FDEN absence denotes radar
!                         radar service not yet provided*
!               and  Data_Block_Pointout  *includes receiving sector/ facility
!                         ID*
!               and  Route_Data_Field_FDEN  *radar vector heading, direct route
!                         clearance, DME arc, radius clearance*
!               and  Data_Field_Not_Forwarded_To_Required_Sector/Facility
!                         *includes intended receiving sector/facility
!                         identification*
!               and  Assigned_Altitude_FDEN  *verified assigned altitude,
!                         altitude restriction, assigned altitude inappropriate
!                         for direction of flight, fix crossing time*
!               and  Reported_Altitude_FDEN  *controller request for a pilot to
!                         report reaching/leaving an altitude, altitude has been
!                         reached/vacated, pilot-reported altitude different from
!                         assigned altitude; coordinated with next sector*
!               and  Record_Of_Clearances/Instructions_Delivered
!               and  Speed_Restriction_Assigned
!               and  Holding_Clearance/Instructions_Issued
!               and  Future_Action_Required  *regarding FDE field tagged*
!               and (Flight_Changed_To_Next_Frequency
!               and [New_Frequency]
!               and [Frequency_Time_Change])
!               and (VFR_Flight_Following_Provided
!               or   Stage_II_Service_Provided
!               or   TCA_Service_Provided
!               or   TRSA_Service_Provided
!               or   ARSA_Service_Provided)
```

Table C-2. Input Messages (Continued)

```
!     Enter/Delete_FDE_Notation (continued) =
!          and  IFR_Flight_Plan_Cancelled
!          and (Arrival_Time
!          and  Clearance_Void_Time)
!          and  Posted_Fix_FDEN  *pilot estimate at fix, actual time at fix*
!          and((SWAP
!          or   Preferential_Route)
!          and  Associated_Segment_Of_Filed_Route)
!          @    SLS 3.7.1.2.1.1.2.1, 3.7.1.2.1.1.2.1.a-u, 3.7.1.2.1.2.2,
!                   40.3.7.1.2.1.1.2.1, 40.3.7.1.2.1.2.c
-------------------------------------------------------------------------
-------------------------------------------------------------------------

                AERONAUTICAL AND METEOROLOGICAL DATA CHANGES

-------------------------------------------------------------------------
-------------------------------------------------------------------------
     A&M_Data_Amendment =
               A&M_Data_Type
          and [Station/Location/Area_Identifier]
          and [Altitude_Limits]
          and  Text
*         @    SLS 3.7 1.1.3.6, 3.7.1.1.3.6.2, 3.7.1.2.1.1.3.c,
*                  3.7.1.2.1.2.3.a, 40.3.7.1.1.3.5, 40.3.7.1.2.1.2.d
-------------------------------------------------------------------------
!
     Sensor_Override =  *inhibit/permit airport environmental sensor data*
               Sensor_ID
          and [Fallback_Value]
          and [Inhibit/Permit_Data]
*         @    SLS 3.7.1.2.1.2.3.d, 40.3.7.1.2.1.2.d
!
-------------------------------------------------------------------------
!    Airport_Environmental_Data_Change
!         @    SLS 40.3.7.1.2.1.1.6
-------------------------------------------------------------------------
-------------------------------------------------------------------------

                          SYSTEM STATUS CHANGES

-------------------------------------------------------------------------
-------------------------------------------------------------------------
     System_Status_Data_Change =
*         @    SLS 3.7.1.2.1.2.4, 40.3.7.1.2.1.2.e
               Data_Category
          and  Text
!         @    Task Analysis
-------------------------------------------------------------------------
-------------------------------------------------------------------------
```

Table C-2. Input Messages (Continued)

```
--------------------------------------------------------------------------------
--------------------------------------------------------------------------------

                              DISPLAY CONTROL

--------------------------------------------------------------------------------
--------------------------------------------------------------------------------

SITUATION DISPLAY ADJUSTMENTS

--------------------------------------------------------------------------------
     Select_Geographic_Area =
               Center_Point  *within facility area or backup area*
          and  Radius  *range about the center point*
*         @    SLS 3.7.1.2.1.1.1.1, 40.3.7.1.2.1.1.1
--------------------------------------------------------------------------------
     Select_Display_Range =
               Range  *10 to 800 NMI, 2 NMI increments*
*         @    SLS 3.7.1.2.1.1.1.1, 40.3.7.1.2.1.1.1
--------------------------------------------------------------------------------
     Select/Inhibit_Category_Of_Geographic_Map_Data =  *grouped by airport
          runway configuration*
             {[Group_Of_Fixes]}
          and{[Group_Of_Airways]}
          and{[Sector_Boundary]}  *grouped by altitude*
          and{[Special_Use_Airspace_Boundary]}
          and{[Airport]}
          and{[Obstruction]}
          and{[Fix]}
          and{[Minimum_Vector_Altitude]}  *MVA*
          and{[Military_Route]}
          and{[Holding_Pattern_Airspace]}
          and {TBD}
*         @    SLS 3.7.1.2.1.1.1.2, 40.3.7.1.2.1.1.1
!         and  Final_Approach_Course
!         and {Navigational_Aid}
!         @    Table 40.3-11
--------------------------------------------------------------------------------
     Emphasize/Deemphasize_Category_Of_Geographic_Map_Data =
             {[Group_Of_Fixes]}
          and{[Group_Of_Airways]}
          and{[Sector_Boundary]}  *grouped by altitude*
          and{[Special_Use_Airspace_Boundary]}
          and{[Airport]}
          and{[Obstruction]}
!         and{[Fix]}
!         and{[Minimum_Vector_Altitude]}
!         and{[Military_Route]}
!         and{[Holding_Pattern_Airspace]}
```

Table C-2. Input Messages (Continued)

```
     Emphasize/Deemphasize_Category_Of_Geographic_Map_Data (continued) =
!         and{[Special_Use_Airspace_Alphanumerics]}
          and (TBD)
*          @     SLS 3.7.1.2.1.1.1.2, 40.3.7.1.2.1.1.1
-------------------------------------------------------------------------
     Select/Deselect_Special_Use_Airspace_Boundary_Display =  *on area-by-
          area basis*
*         @     SLS 3.7.1.2.1.1.1.2, 40. 3.7.1.2.1.1.1
-------------------------------------------------------------------------
!    Reposition/Suppress_Special_Use_Airspace_Alphanumerics =
*         @     SLS 3.7.1.2.1.1.1.2, 40.3.7.1.2.1.1.1
-------------------------------------------------------------------------
!    Select_Multiradar/Single_Radar_Presentation
!         @     SLS 3.7.1.2.1.1.1.3, 3.7.1.2.1.1.1.7, Table 40.3-7
-------------------------------------------------------------------------
     Select/Deselect_Number_Of_Track_History_Positions  *up to 5*
*         @     SLS 3.7.1.2.1.1.1.3, 40.3.7.1.2.1.1.1
-------------------------------------------------------------------------
*    Select/Deselect_Target/Track_Data_Category =
               Data_Category
*         @     SLS 3.7.1.2.1.1.1.3, 40.3.7.1.2.1.1.1
-------------------------------------------------------------------------
     Select/Inhibit_Target/Track_Altitude_Category =
               Altitude_Limits  *strata*
*         @     SLS 3.7.1.2.1.1.1.3, 40.3.7.1.2.1.1.1
-------------------------------------------------------------------------
     Select/Inhibit_Display_Of_Class/Category_Of_Primary/Beacon_Targets =
               Target_Category
*         @     SLS 3.7.1.2.1.1.1.3.a, 40.3.7.1.2.1.1.1
-------------------------------------------------------------------------
     Select/Inhibit_Display_Of_Data_Block_Field =
              (Flight_Identification
          or   All_FDB/PDB/LDB)
          and  Data_Field
*         @     SLS 3.7.1.2.1.1.1.3, 40.3.7.1.2.1.1.1
-------------------------------------------------------------------------
     Display/Suppress_Track_Position_Symbol =
*            [(Flight_Identification)]  *of holding aircraft*
          or  [All_Holding_Aircraft]
          or  [Fix]
*         @     SLS 3.7.1.2.1.1.1.3.e, 40.3.7.1.2.1.1.1
-------------------------------------------------------------------------
     Select/Inhibit_Display_Of_Strobe_Lines =
               [Search_Radar_Strobe]
          and [Beacon_Radar_Strobe]
*         @     SLS 3.7.1.2.1.1.1.5, 3.7.2.2.1.1.1.6, 40.3.7.1.2.1.1.1
-------------------------------------------------------------------------
```

Table C-2. Input Messages (Continued)

```
     Select/Suppress_Display_Of_Range_Rings =
              [Center_Point]
          and [Spacing]  *2, 3, 5, 10, 25 nautical miles*
          and [Number_Of_Rings]
*         @    SLS 3.7.1.2.1.1.1.12, 40.3.7.1.2.1.1.1
-------------------------------------------------------------------------
*    Suppress/Restore_Full_Data_Block =  *holding aircraft, FDB pointout*
              Flight_Identification
*         @    SLS 3.7.1.1.3.8, 3.7.1.2.1.1.1.3.e/dd, 40.3.7.1.2.1.1.1
-------------------------------------------------------------------------
¦    Suppress/Restore_Partial_Data_Block  *individual target*
¦         @    SLS 3.7.1.2.1.1.1.3, 40.3.7.1.2.1.1.1
-------------------------------------------------------------------------
¦    Suppress/Restore_Limited_Data_Block  *individual target*
¦         @    SLS 3.7.1.2.1.1.1.3, 40.3.7.1.2.1.1.1
-------------------------------------------------------------------------
¦    Inhibit/Restore_Display_Of_VFR_Flight_Data
¦         @    SLS 40.3.7.1.1.3.3.2.5
-------------------------------------------------------------------------
*    Display/Suppress/_Hold_Character =
¦           ([Flight_Identification])
¦         or  [All_Holding_Aircraft]
¦         or  [Fix]
*         @    SLS 3.7.1.2.1.1.1.3.e, 40.3.7.1.2.1.1.1
-------------------------------------------------------------------------
     Adjust_Filter_Limits_For_Partial_Data_Block_Display =
              Altitude_Limits
*         @    SLS 3.7.1.2.1.1.1.3, 40.3.7.1.2.1.1.1
-------------------------------------------------------------------------
     Adjust_Filter_Limits_For_Limited_Data_Block_Display =
           ([Altitude_Limits]
          and [Beacon_Code_Limits]
          and [Geographic_Area])
*         @    SLS 3.7.1.2.1.1.1.3.ea/eb/ec, 40.3.7.1.2.1.1.1
-------------------------------------------------------------------------
*    Manually_Offset_Data_Block =  *FDB, PDB, LDB*
             (Flight_Identification
          or   TBD)
          and  Leader_Direction
          and  Leader_Length
*         @    SLS 3.7.1.2.1.1.1.3, 40.3.7.1.2.1.1.1
-------------------------------------------------------------------------
     Select_Automatic/Manual_Data_Block_Offset =
              Flight_Identification
          or   All_FDB
*         @    SLS 3.7.1.2.1.1.1.3, 40.3.7.1.2.1.1.1
-------------------------------------------------------------------------
```

Table C-2. Input Messages (Continued)

```
     Adjust_Data_Item/Category_Display_Intensity =
*              Display_Item  *target/track symbols, track vectors, beacon
*                   radar strobe lines*
          or   Data_Category  *data block type, position history data*
*         @    SLS 3.7.1.2.1.1.1.3, 3.7.2.2.1.1.1.4, 3.7.2.2.1.1.1.6,
*                  40.3.7.1.2.1.1.1
-------------------------------------------------------------------------------
     Display/Delete_Aircraft_Halo =
*             (Track
!         or   All_Tracks)
*         and [Halo_Size]  *radius 0.1 to 99 NMI*
*         @    SLS 3.7.1.2.1.1 1.15, 40.3.7.1.2.1.1.1
-------------------------------------------------------------------------------
     Select_ATC_Radar_Precipitation_Level_For_Display =
*             (Precipitation_Level)3
          and [Geographic_Area]
*         @    SLS 3.7.1.2.1.1.1.7, 40.3.7.1.1.3.5, 40.3.7.1.2.1.1.1
-------------------------------------------------------------------------------
     Select_Automatic/Controller-Selected_ATC_Radar_Weather_Filtering =
             Geographic_Area
*         @    SLS 3.7.1.2.1.1.1.7, 40.3.7.1.2.1.1.1
-------------------------------------------------------------------------------
!    Define/Delete_An_Inset_Of_Situation_Display_In_A_Viewport
!         @    SLS 3.7.1.2.1.1.a.3. 40.3.7.1.2.1.1
-------------------------------------------------------------------------------
!    Enable/Disable_Arrival_Fix_Adapted_Area
!         @    SLS 40.3.7.1.2.1.1.1.a
-------------------------------------------------------------------------------
!    Enter/Remove_Geographic_Tagging =
!            ((CPSD_Designated_Point)
!         or  (Fix))  *including latitude and longitude designations*
!         and  Line
!         and  Circle
!         and  Arc
!         and  Polygon
!         and  Alphanumeric_String
!         @    SLS 3.7.1.2.1.1.1.14, 40.3.7.1.2.1.1.1
-------------------------------------------------------------------------------
```

Table C-2. Input Messages (Continued)

```
FLIGHT DATA DISPLAY MANIPULATIONS

-------------------------------------------------------------------------------
     Select_Flight_Data_Entry_Format =
               (Flight_Identification
          or    FDE_Posting_List
          or    All_FDEs)
*         and1(FDE_Format)1Ø
*         @     SLS 3.7.1.2.1.1.2.a/f, 4Ø.3.7.1.2.1.1.2.f
-------------------------------------------------------------------------------
*    Manually_Post/Order_FDE =  *place. move*
               Flight_Identification
          and  Desired_Location  *in Flight Data Area*
*         @     SLS 3.7.1.2.1.1.2.a/b, 4Ø.3.7.1.2.1.1.2.a/b
-------------------------------------------------------------------------------
*    Acknowledge_FDE_Posting/Change/Suppression/Deletion =
*         @     SLS 3.7.1.2.1.1.2.a/c/d/e, Table 4Ø.3-5,
*                   4Ø.3.7.1.2.1.1.2.a/c/d/e
-------------------------------------------------------------------------------
     Inhibit/Restore_Automatic_FDE_Manipulation =
               Post
          or   Order
!         or   Suppression
          or   Delete
*         @     SLS 3.7.1.2.1.1.2.a/b/d/e/n, 4Ø.3.7.1.2.1.1.2
-------------------------------------------------------------------------------
*    Select_FDE_Sort_Technique  *factor priority, format*
*         @     SLS 3.7.1.2.1.1.2.a/b, 4Ø.3.7.1.2.1.1.2.b
-------------------------------------------------------------------------------
!    Choose_Ascending/Descending_FDE_Sort_Order
!         @     SLS 4Ø.3.7.1.2.1.1.2.b
-------------------------------------------------------------------------------
     Suppress_Display_Of_An_FDE  =
               Flight_Identification
          and (List)
*         @     SLS 3.7.1.1.3.3.2.5, 3.7.1.2.1.1.2.d, 4Ø.3.7.1.1.3.3.2.5,
*                   4Ø.3.7.1.2.1.1.2.d
-------------------------------------------------------------------------------
!    Select_FDE_Organization  *of FDE types*
!         @     SLS 3.7.1.2.1.1.2.a, 4Ø.3.7.1.2.1.1.2.a
-------------------------------------------------------------------------------
!    Select_Automatic/Manual_FDE_Post_Mode
!         @     SLS 3.7.1.2.1.1.2.a, 4Ø.3.7.1.2.1.1.2.a
-------------------------------------------------------------------------------
!    Select_Ascending/Descending_FDE_Sort_Order
!         @     SLS 3.7.1.2.1.1.2.b, 4Ø.3.7.1.2.1.1.2.b
-------------------------------------------------------------------------------
```

Table C-2. Input Messages (Continued)

```
     Select/Deselect_Manual_FDE_Acknowledgement_Mode
*         @    SLS 3.7.1.2.1.1.2.a/c/e/g, 40.3.7.1.2.1.1.2.a/c/d/e
-------------------------------------------------------------------------

ALERT AND RESOLUTION DISPLAY MANIPULATIONS

-------------------------------------------------------------------------
     Suppress_Alert_Entry =
*         @    SLS 3.7.1.2.1.1.4, 40.3.7.1.2.1.1.3
-------------------------------------------------------------------------

SPECIAL LISTS MANIPULATIONS

-------------------------------------------------------------------------
     Display/Suppress_Special_List =
               Special_List_Identification
!*        @    SLS 3.7.1.2.1.1.5, 3.7.1.2.1.1.5.4, 3.7.1.2.1.1.5.5,
*                  3.7.1.2.2.1.2. 40.3.7.1.2.1.1.4, 3.7.1.2.2.1.1
-------------------------------------------------------------------------
     Emphasize/Deemphasize_Special_List_Data_Item
*         @    SLS 3.7.1.2.1.1.5, 40.3.7.1.2.1.1.4
-------------------------------------------------------------------------
     Prioritize_Sort_Factors_For_Coast/Hold/Suspend_List =
*         @    SLS 3.7.1.2.1.1.5.3, 40.3.7.1.2.1.1.4.3
              {Sort_Factor}
          and {Priority}
!         @    Task Analysis
-------------------------------------------------------------------------
!    Select_Ascending/Descending_Sort_Order_For_Coast/Hold/Suspend_List
!         @    SLS 3.7.1.2.1.1.5.3, 40.3.7.1.2.1.1.4.3
-------------------------------------------------------------------------
!    Select_Flight_Data_Fields_For_Sorting_Coast/Hold/Suspend_List
!         @    SLS 3.7.1.2.1.1.5.3, 40.3.7.1.2.1.1 4.3
-------------------------------------------------------------------------

MESSAGE MANIPULATIONS

-------------------------------------------------------------------------
     Query_Data_Base_For_Selected_Readout =
*              Data_Description   *flight plan, weather data, route, ATC
                   Mail message, etc.*
*         @    SLS 3.7.1.2.1.1.3.d.2, 3.7.1.2.1.1.6
                   *assigned/ reported altitude*
          @    Task Analysis/ ARTS functionality
-------------------------------------------------------------------------
```

Table C-2. Input Messages (Continued)

```
     Compose_ATC_Mail =
               Text_Of_Message
          and (Recipient)
          and [Priority_Designator]
          @    SLS 3.7.1.1.3.7.1, 3.7.1.2.1.2.1Ø.a
!         and [Controller_Note]
!         @    SLS 3.7.1.2.1.1.18, 4Ø.3.7.1.2.1.1.11
-------------------------------------------------------------------------
     Edit_ATC_Mail =  *to view and/or edit existing message*
               (ATC_Mail_Message)
          and (Recipient)
          and [Cut-And-Paste]
          and [Select/Copy-And-Paste]
*  @    SLS 3.7.1.1.3.7.1, 3.7.1.2.1.2.1Ø.b, 4Ø.3.7.1.1.3.7.1
-------------------------------------------------------------------------
*    Save_ATC_Mail =  *save, recall*
               ATC_Mail_Message
          and [Portion_To_Save]
*         @    SLS 3.7.1.1.3.7.1, 3.7.1.2.1.2.1Ø.c, 4Ø.3.7.1.1.3.7.1
-------------------------------------------------------------------------
     Delete_ATC_Mail =
               ATC_Mail_Message
*         @    SLS 3.7.1.1.3.7.1, 3.7.1.2.1.2.1Ø.d, 4Ø.3.7.1.1.3.7.1
-------------------------------------------------------------------------
     Acknowledge_Receipt_Of_Priority_ATC_Mail
*         @    SLS 3.7.1.1.3.7.1, 4Ø.3.7.1.1.3.7.1
-------------------------------------------------------------------------
!    Display_Quick_Reference_Message_Entry_Format
!         @    SLS 3.7.1.2.1.2.aa2, 4Ø.3.7.1.2.1.2
-------------------------------------------------------------------------
!    Display_Quick_Reference_Message_Entry_Format_Data
!         @    SLS 3.7.1.2.1.2.aa2, 4Ø.3.7.1.2.1.2
-------------------------------------------------------------------------
!    Save_Query_Response_Data_On_Other_Display
!              Display_For_Message_Data_Save
!         and [Portion_To_Save]
!         @    SLS 3.7.1.2.1.1.6, 4Ø.3.7.1.2.1.1.5
-------------------------------------------------------------------------

AIRPORT ENVIRONMENTAL DATA DISPLAY MANIPULATIONS

-------------------------------------------------------------------------
!    Display/Suppress_Airport_Environmental_Data
*         @    SLS 3.7.1.2.1.1.7, 3.7.1.2.2.1.1, 4Ø.3.7.1.2.1.1.6,
*                   4Ø.3.7.1.2.2.1.1
-------------------------------------------------------------------------
     Emphasize/Deemphasize_Environmental_Data_Item
*         @    SLS 3.7.1.2.1.1.7, 4Ø.3.7.1.2.1.1.6
-------------------------------------------------------------------------
```

Table C-2. Input Messages (Continued)

```
*    ATIS_Character
          @    Task Analysis/ ARTS functionality
!-------------------------------------------------------------------------

SYSTEM STATUS DATA DISPLAY MANIPULATIONS

-------------------------------------------------------------------------
*    Display/Suppress_System_Status_Data =
               {System_Status_Data_Category}
*         @    SLS 3.7.1.2.1.1.8, 3.7.1.2.2.1.1, 40.3.7.1.2.1.1.7,
*                   40.3.7.1.2.2.1.1
-------------------------------------------------------------------------
     Emphasize/Deemphasize_System_Status_Data_Item
*         @    SLS 3.7.1.2.1.1.8, 40.3.7.1.2.1.1.7
-------------------------------------------------------------------------

STATIC INFORMATION DISPLAY MANIPULATIONS

-------------------------------------------------------------------------
     Display/Suppress_Static_Information =
               Static_Information_Item_Identification
          or   Index/Table_Of_Contents
*         @    SLS 3.7.1.2.1.1.9, 3.7.1.2.2.1.1, 40.3.7.1.2.1.1.8
-------------------------------------------------------------------------

CONTROLLER NOTEPAD DISPLAY MANIPULATIONS

-------------------------------------------------------------------------
*    Controller_Note =  *electronic scratchpad*
*              Text  *enter, delete, edit/modify*
*         @    SLS 3.7.1.2.1.1.18, 40.3.7.1.2.1.1.11
-------------------------------------------------------------------------
!
     Display/Suppress_Controller_Notepad_Display
*         @    SLS 3.7.1.2.2.1.1, 30.3.7.1.2.2.1.1
-------------------------------------------------------------------------

SIGN ON/SIGN OFF

-------------------------------------------------------------------------
     Sign_On =
               User_Identification
          and {Operational_Responsibility_Designator}
          and [Display_Preference_Set_Identifier]
*         @    SLS 3.7.1.1.3.7.3, 3.7.1.2.1.2.9a, Table 40.3-7,
*                   40.3.7.1.1.3.7.3
-------------------------------------------------------------------------
```

Table C-2. Input Messages (Continued)

```
     Sign_Off
               User_Identification
          and([Operational_Responsibility_Designator])
*         @    SLS 3.7.1.1.3.7.3, 3.7.1.2.1.2.9b, Table 40.3-7,
*                  40.3.7.1.1.3.7.3
-------------------------------------------------------------------------
     Modify_Display_Preference_Set =
               User_Identification
          and  Password
          and  Display_Preference_Identifier
          and (Data_To_Be_Changed)
*         @    SLS 3.7.1.1.3.7.5, 3.7.1.2.1.2.9.c, 40.3.7.1.1.3.7.4
-------------------------------------------------------------------------
     Display/Invoke_Display_Preference_Set =
               Display_Preference_Identifier
          and([Logical_Display_Identifier])
          and [Current_Display_Selections]
          and [Invoke]
          and([Logical_Display_Viewport_Location])
          and [Portion_Of_Preference_Set]
*         @    SLS 3.7.1.1.3.7.3, 3.7.1.1.3.7.5, 3.7.1.2.1.2.ab,
*                  3.7.1.2.1.2.9.d, Table 40.3-7, 40.3.7.1.1.3.7.3
-------------------------------------------------------------------------

PARAMETER ADJUSTMENTS

-------------------------------------------------------------------------
     Console_Configuration_Edit =
              {Display_Preference_ID}10
          and  Logical_Display_Viewport_Location
          and  Logical_Display_Viewport_Size
          and {Data_Item_Assignment_To_Brightness_Control_Group}
          and {Display_Attributes}  *brightness, symbol size, etc.*
          and {Posting_Options_Per_Display}
          and {Ordering_Options_Per_Display}
          and {Updating_Options_Per_Display}
          and {Deleting_Options_Per_Display}
          and {Formatting_Options_Per_Display}
!         and {Form-Filling_Default_Value}
!         and {Menu-Selection_Default_Value}
*         @    SLS 3.7.1.1.3.7.5, 3.7.1.2.1.2.ab, 40.3.7.1.1.3.7.4
-------------------------------------------------------------------------
```

Table C-2. Input Messages (Continued)

```
GENERAL DISPLAY FUNCTIONS

-------------------------------------------------------------------------
     Request_Assignment_Of_Logical_Display_To_One_Physical_Display =
       *where not otherwise specified*
              Logical_Display
          and [Display_Portion]
          and  Physical_Display
          and [Viewport_Location]
*         @    SLS 3.7.1.1.3.7.5, 3.7.1.2.1.1.a, 40.3.7.1.2.1.1
-------------------------------------------------------------------------
     Page/Scroll
          @    SLS 3.7.1.2.1.1, 3.7.1.2.1.1.2, 3.7.1.2.1.1.5.10,
*                  3.2.1.2.1.1.9, Table 40.3-9/10, 40.3.7.1.2.1.1,
*                  40.3.7.1.2.1.1.2
-------------------------------------------------------------------------
*    Draw/Remove_Graphics =  *main display*
!
!
*         and  Series_Of_Dots  *line, circle, arc*
*         and  Series_Of_Short_Dashes  *line, circle, arc*
*         and  Series_Of_Long_Dashes  *line, circle, arc*
          and (Continuous_Line
          and  Continuous_Circle
          and  Continuous_Arc)
!
*         and  Series_Of_Dots_And_Dashes  *line, circle, arc*
!
*         @    SLS 3.7.1.2.3.1.1.2, 40.3.7.1.2.3
-------------------------------------------------------------------------
     Select_Character/Symbol_Size =
!             Viewport
*         @    SLS 3.7.1.2.1.1.a/f, 3.7.1.2.3.1.1.1, 40.3.7.1.2.1.1
-------------------------------------------------------------------------
!    Adjust_Display_Size/Shape/Location
*         @    SLS 3.7.1.2.1.1.a, 40.3.7.1.2.1.1
-------------------------------------------------------------------------
     Adjust_Brightness_Of_Data_Class
*         @    SLS 3.7.1.2.3.1.1.4, 40.3.7.1.2.3
-------------------------------------------------------------------------
*    Select_Display_Area_Background_Shading
*         @    SLS 3.7.1.2.3.1.1.3, 40.3.7.1.2.3
-------------------------------------------------------------------------
     Deemphasize_Emphasized_Display_Item  *message acknowledgement*
*         @    SLS 3.7.1.2.1.1.g, 40.3.7.1.2.1.1
-------------------------------------------------------------------------
     Define/Delete_A_Viewport_On_A_Display_Surface
*         @    SLS 3.7.1.2.1.1.a.3, 40.3.7.1.2.1.1
-------------------------------------------------------------------------
```

Table C-2. Input Messages (Concluded)

```
*    Terminate_Auditory_Caution/Warning_Alarm  *acknowledge signal*
*         @    SLS 3.7.1.2.1.1.1, 40.3.7.1.2.1.1
-------------------------------------------------------------------------
     Terminate/Set-Aside/Resume_Process_Or_Transaction
*         @    SLS 3.7.1.2.1.2.aa/af, 40.3.7.1.2.1.2
-------------------------------------------------------------------------
     Display_Quick_Reference_Message_Entry_Format
*         @    SLS 3.7.1.2.1.2.aa.2, 40.3.7.1.2.1.2
-------------------------------------------------------------------------
!    Pick_Menu_Option
!         @    SLS 3.7.1.2.1.2.aa.3, 40.3.7.1.2.1.2
-------------------------------------------------------------------------
!    Return_To_Previous_(Higher)_Level_Of_Hierarchical_Menu
!         @    SLS 3.7.1.2.1.2.aa.3, 40.3.7.1.2.1.2
-------------------------------------------------------------------------
!    Enter_Function_Key_Command
!         @    SLS 3.7.1.2.1.2.aa.4, 40.3.7.1.2.1.2
-------------------------------------------------------------------------
!    Compose_Function_Key_Command  *via alphanumeric keyboard*
!         @    SLS 3.7.1.2.1.2.aa.4, 40.3.7.1.2.1.2
-------------------------------------------------------------------------
!    Edit/Correct_Data_Entry_Error
!         @    SLS 3.7.1.2.1.2.af, 40.3.7.1.2.1.2
-------------------------------------------------------------------------
!    Select_Display_Object_By_Pointing_With_Cursor_Positioning/Selection_
!         Device
!         @    SLS 3.7.1.2.1.2.ai, 40.3.7.1.2.1.2
-------------------------------------------------------------------------
!    Select_Display_Location_With_Cursor_Positioning/Selection_Device
!         @    SLS 3.7.1.2.1.2.aj, 40.3.7.1.2.1.2
-------------------------------------------------------------------------
```

APPENDIX D

TASK CHARACTERIZATION ANALYSES

Included within this appendix are three separate task characterization analyses (reference Volume I, Section 3.4):

1. Task Information Requirements
2. Cognitive/Sensory Attributes
3. Performance Requirements
4. *Deleted*

TASK INFORMATION REQUIREMENTS

Task Information Requirements are developed by associating controller tasks with system communication messages, and occasionally by direct observation. Communications messages can be to or from another TAAS sector controller, a TAAS Area Supervisor, a computer display, or someone outside the TAAS facility, such as an ATCT or an en route controller. The available system communication input and output messages for TAAS sector controllers are listed in Appendix C.

TAAS messages include controller-entered messages which may or may not update the TAAS data base, or computer output messages such as data blocks, flight data, weather, or status information. Messages between TAAS terminal or towers may be communicated by Voice Switching and Control System (VSCS), ATC Mail, or system function messages.

The following summarizes the components of the Task Information Requirements table (reference Section 3.4.1 of Volume I for more discussion):

Task Type: Tasks are categorized as belonging to one or more of four types:

- E (ENTRY) - Entry of data into TAAS by system message (e.g., function key) or by ATC Mail
- R (RECEIPT) - Receipt of information by means other than by voice communication; includes system messages, ATC Mail, and direct observation
- A (ANALYTICAL) - Cognitive assessment and evaluation of data, involving no input or output of information unless combined with another task type
- VC (VERBAL COMMUNICATION) - Transfer or exchange of information with another person via VSCS or directly.

Information Received by the Controller: Information can be received via Common Console display (including ATC Mail) or direct observation. Verbal coordination is not addressed. The topic of ATC Mail or object of direct observation is cited in non-UIL message terms.

Information Source: The source of information received can be a specific Sector Suite display, class of output message, ATC Mail, or direct observation.

Information Entered by the Controller: Information is entered by the controller via console data input to the system. For information entered into ATC Mail, only the term "Textual ATC Mail" is shown.

Frequency: Tasks are assessed relative to all other controller tasks as having HIGH (HI), MEDIUM (MED), or LOW (LOW) frequency of performance.

Criticality: Tasks are assessed relative to all other controller tasks as having EXTREME (EXT), HIGH (HI), MEDIUM (MED), or LOW (LOW) criticality

System input messages, display output messages, and logical displays are stated in the terms provided in the User Interface Language of Appendix C. The context of a task's use in the Composition Graphs of Appendix A determines the extent of secondary task types associated with the primary nature of the task, as implied by the task action verb.

Controller activity and sub-activity statements are included in the table listing, as is the one macro, but their information requirements are not listed.

Of the 369 TAAS controller tasks, 159 tasks (43 percent) are rated as either Extreme or High criticality (30 Extreme and 129 High). Medium criticality is assigned to 137 tasks (37 percent). The remaining 73 tasks (19 percent) receive a Low criticality rating. Criticality ratings do not take into consideration the frequency of task performance. Thus, a number of the tasks involved with system malfunctions receive a High criticality rating because, when they would need to be performed, they would be critical to operations.

Task Information Requirements

Task Number	Task Statement	Task Type	Information Received	Information Source	Information Entered	Freq	Crit
A1.0	PERFORM TAAS DOMESTIC AIR TRAFFIC CONTROL						
A1.0.0.0	GENERATE CLEARANCE						
A1.1	PERFORM SITUATION MONITORING						
A1.1.1	CHECKING AND EVALUATING SEPARATION						
A1.1.1.1	REVIEW FLIGHT DATA DISPLAY FOR PRESENT AND/OR FUTURE AIRCRAFT SEPARATION	R/A	FLIGHT DATA ENTRY, FLIGHT DATA READOUT AREA	FLIGHT DATA DISPLAY	N/A	M	E
A1.1.1.2	REVIEW SITUATION DISPLAY FOR POTENTIAL VIOLATION OF AIRCRAFT SEPARATION STANDARDS	R/A	FULL DATA BLOCK, LIMITED DATA BLOCK, TARGET POSITION SYMBOL, OBSTRUCTION	SITUATION DISPLAY	N/A	H	E
A1.1.1.4	PROJECT MENTALLY AN AIRCRAFT'S FUTURE POSITION/ ALTITUDE/ PATH	R/A	FULL DATA BLOCK, LIMITED DATA BLOCK, TARGET POSITION SYMBOL, OBSTRUCTION, WEATHER DESCRIPTOR, FLIGHT DATA ENTRY	SITUATION DISPLAY, FLIGHT DATA DISPLAY	N/A	H	H
A1.1.1.6	FORCE/ QUICK LOOK FULL DATA BLOCK(S) TO EXAMINE TRACK INFORMATION ON AIRCRAFT	E/R/A	FULL DATA BLOCK	SITUATION DISPLAY	FLIGHT ID, FORCE DATA BLOCK, SECTOR NUMBER, QUICK LOOK	L	M
A1.1.1.7	DETERMINE WHETHER AIRCRAFT MAY BE SEPARATED BY LESS THAN PRESCRIBED MINIMA	A	N/A	N/A	N/A	H	E
A1.1.1.8	SELECT FDE SORTING PRIORITY SCHEME	E	N/A	N/A	SELECT FDE SORT TECHNIQUE	L	L
A1.1.1.9	OBSERVE TRACK VELOCITY/ DISTANCE VECTOR TO PROJECT AIRCRAFT MOVEMENT	E/R/A	TRACK DISTANCE VECTOR, TRACK VELOCITY VECTOR	SITUATION DISPLAY	FLIGHT ID, MINUTES, REQUEST TRACK VELOCITY VECTOR, MILES, REQUEST TRACK DISTANCE VECTOR	M	M
A1.1.1.12	REVIEW SITUATION DISPLAY FOR POTENTIAL VIOLATION OF AIRSPACE SEPARATION STANDARDS	R/A	FULL DATA BLOCK, LIMITED DATA BLOCK, TARGET POSITION SYMBOL, SPECIAL USE AIRSPACE	SITUATION DISPLAY	N/A	H	E
A1.1.1.14	REVIEW SITUATION DISPLAY FOR POTENTIAL VIOLATION OF CONFORMANCE CRITERIA	R/A	TARGET POSITION SYMBOL, ALTITUDE NONCONFORMANCE INDICATOR, GEOGRAPHIC MAP DATA	SITUATION DISPLAY, FULL DATA BLOCK	N/A	H	M
A1.1.1.15	DETERMINE WHETHER AIRSPACE SEPARATION STANDARDS MAY BE VIOLATED	A	N/A	N/A	N/A	H	E
A1.1.1.17	DETERMINE WHETHER FLOW RESTRICTIONS MAY BE VIOLATED	A	N/A	N/A	N/A	H	H
A1.1.1.75	REVIEW DISPLAYS FOR POTENTIAL VIOLATION OF FLOW RESTRICTIONS	R/A	FULL DATA BLOCK, TARGET POSITION SYMBOL, FLIGHT DATA ENTRY	SITUATION DISPLAY, FLIGHT DATA DISPLAY	N/A	H	E
A1.1.1.76	REQUEST BEACON CODE/ MODE C/ GROUND SPEED READOUT OF UNASSOCIATED TARGET	E/R/A	MODE 3/A BEACON CODE, MODE C ALTITUDE DATA, GROUND SPEED	LIMITED DATA BLOCK	QUERY DATA BASE FOR SELECTED READOUT (BEACON CODE/ MODE C/ GROUND SPEED)	L	M
A1.1.2	RECEIVING SYSTEM STATUS INFORMATION						

Task Information Requirements

Task Number	Task Statement	Task Type	Information Received	Information Source	Information Entered	Freq	Crit
A1.1.2.1	OBSERVE DISPLAY OF NEW/ CHANGED EQUIPMENT/ OPERATIONAL STATUS	R/A	EQUIPMENT STATUS, COMMUNICATION STATUS, COMPUTER OUTAGE, DATA COMMUNICATION LINE OUTAGE, VOICE COMMUNICATION LINE OUTAGE	SYSTEM STATUS DATA DISPLAY, VSCS A/G DISPLAY, VSCS G/G DISPLAY	N/A	L	M
A1.1.2.2	ENTER SYSTEM STATUS DATA CHANGE	E	N/A	N/A	SYSTEM STATUS DATA CHANGE	L	M
A1.1.2.3	RECEIVE NOTICE OF STATUS OF ADJACENT/ BACKUP FACILITY AUTOMATION EQUIPMENT	R/VC	ADJACENT/ BACKUP FACILITY AUTOMATION EQUIPMENT STATUS	TEXTUAL ATC MAIL	N/A	L	L
A1.1.2.4	DETECT EQUIPMENT SERVICE INTERRUPTION/ RESTORATION	R	EQPT STATUS, COMPUTER OUTAGE, USAGE OF OPERATIONAL FUNCTIONS, STATUS INFORMATION, UPDATE INDICATION	SYSTEM STATUS DATA DISPLAY	N/A	L	M
A1.1.2.5	RECEIVE NOTICE OF COMMUNICATION STATUS	R/VC	COMMUNICATION STATUS	TEXTUAL ATC MAIL	N/A	L	M
A1.1.2.6	REQUEST REPORT ON NAVAID STATUS	VC	N/A	N/A	N/A	L	M
A1.1.2.75	DETECT AIRPORT ENVIRONMENTAL EQUIPMENT SERVICE INTERRUPTION/ RESTORATION ALERT	R	ATC AIRPORT EQUIPMENT ALERT	AIRPORT ENVIRONMENTAL DATA DISPLAY	N/A	L	M
A1.1.2.76	ACKNOWLEDGE AIRPORT ENVIRONMENTAL EQUIPMENT SERVICE OPERATIONAL STATUS ALERT	E	N/A	N/A	ACKNOWLEDGE EQUIPMENT STATUS ALERT	L	M
A1.1.3	ANALYZING INITIAL REQUESTS FOR CLEARANCES						
A1.1.3.1	SEARCH DISPLAY FOR INACTIVE FLIGHT PLAN ON CLEARANCE REQUEST	R/A	FLIGHT DATA ENTRY	FLIGHT DATA DISPLAY	N/A	L	L
A1.1.3.2	REQUEST FLIGHT DATA READOUT	E/R/A	FLIGHT DATA READOUT AREA	FLIGHT DATA DISPLAY	FLIGHT ID, REQUEST FLIGHT DATA READOUT	L	M
A1.1.3.3	REQUEST FLIGHT DATA ENTRY FORMAT CHANGE	E	N/A	N/A	FLIGHT ID, FDE POSTING LIST, ALL FDE'S, FDE FORMAT, SELECT FLIGHT DATA ENTRY FORMAT	L	M
A1.1.4	PROCESSING DEPARTURE/ EN ROUTE TIME INFORMATION						
A1.1.4.1	ENTER DEPARTURE/ EN ROUTE TIME MESSAGE	E	N/A	N/A	FLIGHT ID, DEPARTURE TIME, ASSIGNED ALTITUDE, DEPARTURE, FIELD TO BE MODIFIED, NEW DATA, FLIGHT DATA AMENDMENT	L	M
A1.1.4.2	INITIATE TRACK MANUALLY	E/R	FULL DATA BLOCK, TARGET/ TRACK DESCRIPTOR	SITUATION DISPLAY	FLIGHT ID, TRACK ACTION (START), TRACK START POSITION, HEADING, SPEED, ASSIGNED ALTITUDE, TRACK	L	H
A1.1.4.3	OBSERVE AUTOMATIC TRACK START	R	FULL DATA BLOCK, TARGET/ TRACK DESCRIPTOR	SITUATION DISPLAY	N/A	M	H
A1.1.4.4	RECEIVE DEPARTURE/ EN ROUTE TIME NOTICE	R/VC	DEPARTURE TIME, EN ROUTE TIME	TEXTUAL ATC MAIL	N/A	L	H
A1.1.4.75	ACKNOWLEDGE EMPHASIZED DEPARTURE MESSAGE	E	N/A	N/A	DEEMPHASIZE EMPHASIZED DISPLAY ITEM (UNSUCCESSFUL DEPARTURE MESSAGE)	L	L

Task Number	Task Statement	Task Type	Information Received	Information Source	Information Entered	Freq	Crit
A1.1.4.76	OBSERVE EMPHASIZED DEPARTURE MESSAGE	R/A	ACTUAL DEPARTURE TIME	FLIGHT DATA ENTRY	N/A	L	M
A1.1.5	PROCESSING REQUESTS FOR FLIGHT FOLLOWING						
A1.1.5.1	EVALUATE CONDITIONS FOR PROVIDING FLIGHT FOLLOWING	R/A	FULL DATA BLOCK, FLIGHT DATA ENTRY, SPECIAL LISTS, ALERT CONDITION, WEATHER DESCRIPTOR, SYSTEM STATUS INFORMATION	SITUATION DISP, FLIGHT DATA DISP, SPECIAL LISTS, ALERT & RESOLUTION DISP, SYS STATUS DATA DISP	N/A	L	M
A1.1.5.2	RECEIVE REQUEST FOR FLIGHT FOLLOWING	R/VC	FLIGHT FOLLOWING REQUEST	TEXTUAL ATC MAIL	N/A	L	L
A1.1.5.3	DENY FLIGHT FOLLOWING REQUEST	E/VC	N/A	N/A	TEXTUAL ATC MAIL	L	L
A1.1.5.4	REQUEST/ ASSIGN BEACON CODE TO AIRCRAFT	E/R/VC	BEACON CODE	RESPONSE DISPLAY, FLIGHT DATA ENTRY	FLIGHT ID, BEACON CODE, CODE SUBSET DESIGNATOR, DISCRETE CODE REQUEST	M	M
A1.1.5.5	INFORM PILOT OF ALTERNATE INSTRUCTIONS NECESSARY FOR FLIGHT FOLLOWING SERVICE	VC	N/A	N/A	N/A	L	M
A1.1.6	HOUSEKEEPING						
A1.1.6.1	OFFSET A DATA BLOCK	E	N/A	N/A	FLIGHT ID, LEADER DIRECTION, LEADER LENGTH, MANUALLY OFFSET DATA BLOCK	L	M
A1.1.6.2	UPDATE/ REVISE CONTROLLER NOTE	E	N/A	N/A	CONTROLLER NOTE (EDIT/ MODIFY)	L	L
A1.1.6.3	DELETE FLIGHT DATA ENTRY AND FULL DATA BLOCK FROM ATC SYSTEM	E	N/A	N/A	FLIGHT IDENTIFICATION, DROP FLIGHT PLAN	L	L
A1.1.6.5	SUPPRESS DISPLAY OF FLIGHT DATA ENTRY AND FULL DATA BLOCK FROM ALL DISPLAYS IN OWN SECTOR SUITE	E	N/A	N/A	FLIGHT ID, SUPPRESS FULL DATA BLOCK AND FLIGHT DATA ENTRY	L	L
A1.1.6.6	RESTORE DISPLAY OF FLIGHT DATA ENTRY AND FULL DATA BLOCK TO ALL DISPLAYS ON OWN SECTOR SUITE	E	N/A	N/A	FLIGHT ID, RESTORE FULL DATA BLOCK AND FLIGHT DATA ENTRY	L	M
A1.1.6.7	SUPPRESS DATA BLOCK FROM ALL DISPLAYS IN OWN SECTOR SUITE	E	N/A	N/A	FLIGHT ID, SUPPRESS FULL DATA BLOCK	L	L
A1.1.6.8	RESTORE DATA BLOCK TO ALL DISPLAYS IN OWN SECTOR SUITE	E	N/A	N/A	FLIGHT ID, DISPLAY FULL DATA BLOCK	L	M
A1.1.6.9	SUPPRESS FLIGHT DATA ENTRY FROM ALL DISPLAYS IN OWN SECTOR SUITE	E	N/A	N/A	FLIGHT ID, LIST, SUPPRESS DISPLAY OF AN FDE	L	L
A1.1.6.10	RESTORE FLIGHT DATA ENTRY TO ALL DISPLAYS IN OWN SECTOR SUITE	E	N/A	N/A	FLIGHT ID, REQUEST FDE'S	L	L
A1.1.5.11	ENTER FDE NOTATIONS	E	N/A	N/A	FLID, FIELD TO BE MODIFIED, NEW DATA, FLIGHT DATA AMENDMENT, ALTITUDE RESTRICTION, LOST OR TERMINATED INDICATOR, RADAR CONTACT, ENTER FDEN	H	L

Task Information Requirements

Task Number	Task Statement	Task Type	Information Received	Information Source	Information Entered	Freq	Crit
A1.1.6.12	DELETE FDE NOTATIONS	E	N/A	N/A	FLID, FIELD TO BE DELETED, FLIGHT DATA AMENDMENT, ALTITUDE RESTRICTION, LOST OR AGE, LOST OR TERMINATED INDICATOR, RADAR CONTACT	L	M
A1.1.6.13	RESEQUENCE FLIGHT DATA ENTRY MANUALLY	E	N/A	N/A	MANUALLY POST/ ORDER FDE	L	L
A1.1.6.14	DELETE CONTROLLER NOTE	E	N/A	N/A	CONTROLLER NOTE (DELETE)	L	L
A1.1.6.15	DELETE SCRATCH PAD DATA IN FULL DATA BLOCK	E	N/A	N/A	FLIGHT ID, DELETE, SCRATCH PAD	L	L
A1.1.6.52	REMOVE OBSOLETE PAPER RECORDS OR RECORDED DATA	E	N/A	N/A	N/A	M	L
A1.1.6.75	DELETE FLIGHT DATA ENTRY AND FULL DATA BLOCK FROM LOCAL TAAS SYSTEM	E	N/A	N/A	FLIGHT IDENTIFICATION, DROP FLIGHT PLAN INTERNAL	L	L
A1.2	RESOLVE AIRCRAFT CONFLICTS						
A1.2.1	PERFORMING AIRCRAFT CONFLICT RESOLUTION						
A1.2.1.1	DETECT AIRCRAFT CONFLICT ALERT INDICATION	R	CONFLICT ALERT, CONFLICT ALERT INDICATOR, ALERT TYPE, ALERT CONDITION, CALLSIGN	ALERT AND RESOLUTION DISPLAY, FULL DATA BLOCK, FLIGHT DATA ENTRY NOTATION	N/A	L	E
A1.2.1.2	DETERMINE VALIDITY OF POTENTIAL AIRCRAFT CONFLICT NOTICE OR INDICATION	A	FLIGHT DATA ENTRY, GEOGRAPHIC MAP DATA, DATA BLOCK	FLIGHT DATA DISPLAY, SITUATION DISPLAY	N/A	L	H
A1.2.1.3	RECEIVE CONTROLLER NOTICE OF POTENTIAL AIRCRAFT CONFLICT IN SECTOR	VC	N/A	N/A	N/A	L	E
A1.2.1.4	INFORM CONTROLLER OF POTENTIAL AIRCRAFT CONFLICT IN HIS SECTOR	VC	N/A	N/A	N/A	L	E
A1.2.1.5	FORWARD NOTICE OF AIRCRAFT CONFLICT TO SUPERVISOR	E/VC	N/A	N/A	TEXTUAL ATC MAIL	L	L
A1.2.1.7	REVIEW POTENTIAL CONFLICT SITUATION FOR RESOLUTION	R/A	FULL DATA BLOCK, LIMITED DATA BLOCK, FLIGHT DATA ENTRY	SITUATION DISPLAY, FLIGHT DATA DISPLAY, ALERT AND RESOLUTION DISPLAY	N/A	L	E
A1.2.1.8	DETERMINE APPROPRIATE ACTION TO RESOLVE AIRCRAFT CONFLICT SITUATION	A	N/A	N/A	N/A	L	E
A1.2.1.9	PERCEIVE POTENTIAL AIRCRAFT CONFLICT SITUATION	R/A	FULL DATA BLOCK, LIMITED DATA BLOCK, FLIGHT DATA ENTRY	SITUATION DISPLAY, FLIGHT DATA DISPLAY	N/A	M	E
A1.2.2	PERFORMING MINIMUM SAFE ALTITUDE PROCESSING						
A1.2.2.1	DETECT MSAW INDICATION OR ALARM	R	MINIMUM SAFE ALTITUDE WARNING, ALERT TYPE, ALERT CONDITION, AURAL ALARM	ALERT AND RESOLUTION DISPLAY, FULL DATA BLOCK	N/A	L	E

Task Information Requirements

Task Number	Task Statement	Task Type	Information Received	Information Source	Information Entered	Freq	Crit
A1.2.2.2	FORWARD NOTICE OF VALID MSAW OR FLIGHT ASSIST TO SUPERVISOR	E/VC	N/A	N/A	TEXTUAL ATC MAIL	L	L
A1.2.2.3	RECEIVE CONTROLLER NOTICE OF POTENTIAL MSAW IN SECTOR	VC	N/A	N/A	N/A	L	E
A1.2.2.4	INFORM CONTROLLER OF POTENTIAL MSAW IN HIS SECTOR	VC	N/A	N/A	N/A	L	E
A1.2.2.5	PERCEIVE POTENTIAL LOW ALTITUDE SITUATION	R/A	FULL DATA BLOCK, LIMITED DATA BLOCK, FLIGHT DATA ENTRY, OBSTRUCTION, GEOGRAPHIC MAP DATA, MINIMUM VECTOR ALTITUDE	SITUATION DISPLAY, FLIGHT DATA DISPLAY	N/A	M	E
A1.2.2.6	DETERMINE VALIDITY OF MSAW NOTICE OR INDICATION	A	N/A	N/A	N/A	L	H
A1.2.2.7	DETERMINE APPROPRIATE ACTION TO RESOLVE LOW ALTITUDE SITUATION	A	N/A	N/A	N/A	L	E
A1.2.3	PERFORMING AIRSPACE CONFLICT PROCESSING						
A1.2.3.1	INFORM CONTROLLER OF POTENTIAL AIRSPACE CONFLICT IN HIS SECTOR	E/VC	N/A	N/A	TEXTUAL ATC MAIL	L	E
A1.2.3.2	RECEIVE CONTROLLER NOTICE OF POTENTIAL AIRSPACE CONFLICT IN SECTOR	VC	N/A	N/A	N/A	L	E
A1.2.3.3	REQUEST RELEASE OF SPECIAL USE AIRSPACE	E/VC	N/A	N/A	TEXTUAL ATC MAIL	L	M
A1.2.3.4	RECEIVE DENIAL OF USE OF SPECIAL USE AIRSPACE	R/VC	REJECTION OF AIRSPACE RELEASE	TEXTUAL ATC MAIL	N/A	L	M
A1.2.3.5	RECEIVE APPROVAL FOR USE OF SPECIAL USE AIRSPACE	R/VC	AIRSPACE RELEASE ACCEPTANCE	TEXTUAL ATC MAIL	N/A	L	M
A1.2.3.7	PERCEIVE POTENTIAL AIRSPACE CONFLICT SITUATION	R/A	FULL DATA BLOCK, LIMITED DATA BLOCK, FLIGHT DATA ENTRY, GEOGRAPHIC MAP DATA	SITUATION DISPLAY, FLIGHT DATA DISPLAY	N/A	M	H
A1.2.3.8	DETERMINE APPROPRIATE ACTION TO RESOLVE AIRSPACE CONFLICT SITUATION	A	N/A	N/A	N/A	L	H
A1.2.3.75	DETERMINE VALIDITY OF AIRSPACE CONFLICT NOTICE	A	N/A	N/A	N/A	L	H
A1.2.4	ISSUING UNSAFE CONDITION ADVISORIES						
A1.2.4.1	OBSERVE DISPLAY FOR FIXED OBSTRUCTIONS THAT MAY INTERFERE WITH AIRCRAFT FLIGHT	R/A	OBSTRUCTION, TARGET POSITION SYMBOL, FLIGHT DATA ENTRY	SITUATION DISPLAY, FLIGHT DATA DISPLAY	N/A	L	H
A1.2.4.3	FORMULATE ADVISORY/ SAFETY ALERT CONTENT	A	N/A	N/A	N/A	L	H
A1.2.4.4	DETECT AIRCRAFT MANEUVER IN RESPONSE TO ADVISORY/ ALERT	R/A	TARGET POSITION SYMBOL, DATA BLOCK, POSITION HISTORY	SITUATION DISPLAY	N/A	L	H
A1.2.4.5	ISSUE TRAFFIC ADVISORY/ SAFETY ALERT IN REGARD TO TRAFFIC PROXIMITY	VC	N/A	N/A	N/A	M	E

Task Information Requirements

Task Number	Task Statement	Task Type	Information Received	Information Source	Information Entered	Freq	Crit
A1.2.4.6	INFORM PILOT WHEN CLEAR OF TRAFFIC	VC	N/A	N/A	N/A	M	L
A1.2.4.7	ISSUE ADVISORY IN REGARD TO A NON-CONTROLLED OBJECT	VC	N/A	N/A	N/A	L	H
A1.2.4.8	INFORM PILOT WHEN CLEAR OF NON-CONTROLLED OBJECT	VC	N/A	N/A	N/A	L	L
A1.2.4.9	ISSUE ADVISORY IN REGARD TO RESTRICTED AIRSPACE PROXIMITY	VC	N/A	N/A	N/A	L	M
A1.2.4.10	ISSUE ADVISORY IN REGARD TO FLIGHT PLAN DEVIATION	VC	N/A	N/A	N/A	L	M
A1.2.4.12	ISSUE SAFETY ALERT IN REGARD TO MINIMUM ALTITUDE	VC	N/A	N/A	N/A	L	E
A1.2.4.13	OBSERVE DISPLAY FOR NON-CONTROLLED AIRBORNE OBJECTS THAT MAY INTERFERE WITH AIRCRAFT FLIGHT	R/A	TARGET POSITION SYMBOL	SITUATION DISPLAY	N/A	L	H
A1.2.4.14	DETERMINE NEED FOR ADVISORY/ SAFETY ALERT/ CLEARANCE	A	N/A	N/A	N/A	H	H
A1.2.5	SUPPRESSING ALERTS						
A1.2.5.2	SUPPRESS CONFLICT ALERT FOR PAIRED AIRCRAFT	E	N/A	N/A	FLIGHT ID, SUPPRESS ALERT INDICATOR, SUPPRESS CONFLICT ALERT PAIR	L	L
A1.2.5.5	SUPPRESS MSAW FUNCTION FOR AN AIRCRAFT	E	N/A	N/A	FLIGHT IDENTIFICATION, SUPPRESS ALERT INDICATOR, SUPPRESS MSAW ALERT	L	L
A1.2.5.75	DETERMINE VALIDITY/ APPROPRIATENESS OF DISPLAY OF AN ALERT	R/A	ALERT CONDITION, DATA BLOCK	ALERT AND RESOLUTION DISPLAY, SITUATION DISPLAY	N/A	L	H
A1.2.5.7C	RESTORE SPECIFIC ALERT FUNCTION TO NORMAL	E	N/A	N/A	FLIGHT ID, RESTORE CA PAIR, RESTORE MSAW ALERT	L	L
A1.3	MANAGE AIR TRAFFIC SEQUENCES						
A1.3.1	RESPONDING TO TRAFFIC MANAGEMENT CONSTRAINTS/ FLOW CONFLICTS						
A1.3.1.1	EVALUATE TRAFFIC MANAGEMENT CONSTRAINTS FOR EFFECT ON TRAFFIC FLOW	R/A	TRAFFIC MANAGEMENT ADVISORY	TEXTUAL ATC MAIL, FLIGHT DATA ENTRY	N/A	M	M
A1.3.1.2	CHOOSE OPTION TO BRING AIRCRAFT INTO CONFORMANCE WITH TRAFFIC MANAGEMENT RESTRICTIONS	R/A	AIRCRAFT POSITION AND MOVEMENT, AIRCRAFT CHARACTERISTICS,	FULL DATA BLOCK, TARGET POSITION SYMBOL, FLIGHT DATA ENTRY, SPECIAL LISTS	N/A	L	M
A1.3.1.3	DISCUSS DISCONTINUANCE OF TRAFFIC MANAGEMENT RESTRICTION/ TRAFFIC REROUTE WITH SUPERVISOR	A/VC	N/A	N/A	N/A	L	L
A1.3.1.4	REVIEW OPTIONS TO BRING AIRCRAFT INTO CONFORMANCE WITH TRAFFIC MANAGEMENT RESTRICTIONS	A	N/A	N/A	N/A	L	M

Task Information Requirements

Task Number	Task Statement	Task Type	Information Received	Information Source	Information Entered	Freq	Crit
A1.3.1.5	NEGOTIATE TRAFFIC MANAGEMENT ACTION WITH PILOT	VC	N/A	N/A	N/A	L	L
A1.3.1.6	RECEIVE TRAFFIC MANAGEMENT RESTRICTION	R/VC	TRAFFIC MANAGEMENT RESTRICTION	TEXTUAL ATC MAIL	N/A	L	M
A1.3.1.8	RECEIVE SUPERVISOR NOTICE TO HOLD/ REROUTE TRAFFIC CLEAR OF CONTINGENCY	R/VC	HOLD/ REROUTE TRAFFIC	TEXTUAL ATC MAIL	N/A	L	M
A1.3.1.9	REQUEST EXCEPTION TO TRAFFIC MANAGEMENT RESTRICTION	E/VC	N/A	N/A	TEXTUAL ATC MAIL	L	M
A1.3.1.10	REVIEW TRAFFIC DEMANDS AND TRAFFIC MANAGEMENT RESTRICTIONS WITH SUPERVISOR	ERA/VC	TRAFFIC FLOW INFORMATION	TEXTUAL ATC MAIL, SITUATION DISP, FLIGHT DATA DISPLAY	TEXTUAL ATC MAIL	L	L
A1.3.1.11	RECEIVE SUPERVISOR BRIEFING ON WHAT TRAFFIC CONDITIONS TO EXPECT	VC/A	N/A	N/A	N/A	L	L
A1.3.1.13	RECEIVE APPROVAL OF REQUEST FOR EXCEPTION TO FLOW RESTRICTION	R/VC	EXCEPTION APPROVAL	TEXTUAL ATC MAIL	N/A	L	L
A1.3.1.14	RECEIVE DENIAL OF REQUEST FOR EXCEPTION TO FLOW RESTRICTION	R/VC	EXCEPTION DENIAL	TEXTUAL ATC MAIL	N/A	L	L
A1.3.1.75	REQUEST TRAFFIC MANAGEMENT ADVISORIES	R/E/VC	TRAFFIC MANAGEMENT ADVISORY	TEXTUAL ATC MAIL	TEXTUAL ATC MAIL	L	L
A1.3.2	PROCESSING DEVIATIONS						
A1.3.2.1	PERCEIVE AN ALTITUDE OR ROUTE DEVIATION	R/A	APPARENT ROUTE OF FLIGHT/ ALTITUDE/ GROUND SPEED, INTENDED ROUTE OF FLIGHT/ ALTITUDE/ GROUND SPEED, TARGET POSITION SYMBOL	FULL DATA BLOCK, FLIGHT DATA ENTRY, POSITION SYMBOL	N/A	L	M
A1.3.2.2	OBSERVE AIRCRAFT RESUMING NORMAL FLIGHT PLAN	R/A	ROUTE DISPLAY, ASSIGNED ALTITUDE, GROUND SPEED, TARGET POSITION SYMBOL, POSITION HISTORY, GEOGRAPHICAL MAP DATA	FULL DATA BLOCK, TARGET/ TRACK DESCRIPTOR, SITUATION DISPLAY	N/A	L	M
A1.3.2.3	DETERMINE MANEUVER TO ESTABLISH/ RESTORE FLIGHT PLAN CONFORMANCE	A	N/A	N/A	N/A	L	M
A1.3.2.4	RECEIVE CONTROLLER NOTICE OF AIRCRAFT FLIGHT PLAN DEVIATION	R/VC	FLIGHT PLAN DEVIATION	TEXTUAL ATC MAIL	N/A	L	M
A1.3.2.5	INFORM CONTROLLER/ SUPERVISOR OF AIRCRAFT FLIGHT PLAN DEVIATION	E/VC	N/A	N/A	TEXTUAL ATC MAIL	L	M
A1.3.2.9	REQUEST DISPLAY OF FDE FOR FLIGHT PLAN	E	N/A	N/A	FLIGHT ID, SECTOR NUMBER/ FACILITY, POSTING LIST HEADER, REQUEST FDE'S	L	M
A1.3.2.10	EVALUATE FLIGHT DATA TO DETERMINE FUTURE COURSE OF ACTION	R/A	FLIGHT DATA ENTRY	FLIGHT DATA DISPLAY	N/A	H	M
A1.3.2.12	EVALUATE ALTITUDE NONCONFORMANCE INDICATION FOR ACTION NEEDED	R/A	ALTITUDE NONCONFORMANCE INDICATOR, GEOGRAPHIC MAP DATA	FULL DATA BLOCK, SITUATION DISPLAY	N/A	L	H

Task Information Requirements

Task Number	Task Statement	Task Type	Information Received	Information Source	Information Entered	Freq	Crit
A1.3.2.13	EVALUATE UNREASONABLE MODE C INDICATION FOR ACTION NEEDED	A	N/A	N/A	N/A	M	L
A1.3.2.14	DETECT UNREASONABLE MODE C INDICATION	R	MODE C REASONABLENESS CHECK FAILURE INDICATOR	FULL DATA BLOCK	N/A	L	M
A1.3.2.75	DETECT ALTITUDE NONCONFORMANCE INDICATION	R	ALTITUDE NONCONFORMANCE INDICATOR	FULL DATA BLOCK	N/A	L	H
A1.3.3	RESPONDING TO SPECIAL USE AIRSPACE EVENTS						
A1.3.3.1	INFORM CONTROLLER/ SUPERVISOR/ PILOT OF AIRSPACE RESTRICTION IMPOSED/ RELEASE	E/VC	N/A	N/A	TEXTUAL ATC MAIL	L	M
A1.3.3.3	RECEIVE REQUEST FOR USE OF SPECIAL USE AIRSPACE FROM SUPERVISOR/ CONTROLLER/ PILOT	R/VC	SPECIAL USE AIRSPACE REQUEST	TEXTUAL ATC MAIL	N/A	L	M
A1.3.3.4	DETERMINE RESTRICTIONS TO USERS NECESSARY WITHIN RELEASED AIRSPACE	A	N/A	N/A	N/A	L	L
A1.3.3.5	OBSERVE DISPLAY OF AIRSPACE RESTRICTION STATUS CHANGE	R	GEOGRAPHIC MAP DATA, SPECIAL USE AIRSPACE STATUS	SITUATION DISPLAY, SYSTEM STATUS DATA DISPLAY	N/A	L	M
A1.3.3.6	RECEIVE NOTICE OF AIRSPACE RESTRICTION/ RELEASE	R/VC	SPECIAL USE AIRSPACE RESTRICTION/ RELEASE	TEXTUAL ATC MAIL	N/A	L	M
A1.3.4	ESTABLISHING ARRIVAL SEQUENCES						
A1.3.4.1	DETERMINE DESCENT TIME OR POINT	R/A	TRACK POSITION SYMBOL	SITUATION DISPLAY	N/A	H	M
A1.3.4.2	PROJECT TRAFFIC SEQUENCE TO ESTABLISH/ MODIFY APPROACH FLOW TO AIRPORT OR SECTOR	A	N/A	N/A	N/A	H	H
A1.3.4.4	REQUEST AIRCRAFT BE REROUTED	E/VC	N/A	N/A	TEXTUAL ATC MAIL	L	M
A1.3.4.5	PROJECT MENTALLY THE RANGE/ BEARING BETWEEN AIRCRAFT	R/A	TARGET POSITION SYMBOL, FULL DATA BLOCK	SITUATION DISPLAY	N/A	H	H
A1.3.4.6	PROJECT MENTALLY THE ARRIVAL FLOW FOR AIRCRAFT LANDING IN OR NEAR THIS SECTOR	A	N/A	N/A	N/A	H	M
A1.3.4.7	ISSUE NEW ATIS CODE	VC	N/A	N/A	N/A	M	M
A1.3.4.8	INFORM PILOT TO OBTAIN NEW ATIS INFORMATION	VC	N/A	N/A	N/A	L	L
A1.3.4.9	ISSUE ATIS INFORMATION	VC	N/A	N/A	N/A	M	L
A1.3.5	MANAGING DEPARTURE FLOWS						
A1.3.5.1	VALIDATE MODE C ALTITUDE	R/A	MODE C ALTITUDE	FULL DATA BLOCK	N/A	H	H
A1.3.5.2	ENTER REPORTED ALTITUDE	E	N/A	N/A	FLIGHT ID, ALTITUDE, INDICATOR DENOTING REPORT REACHING/ LEAVING, INDICATOR DENOTING ALTITUDE OTHER THAN ASSIGNED, REPORTED ALTITUDE	M	M

Task Number	Task Statement	Task Type	Information Received	Information Source	Information Entered	Freq	Crit
A1.3.5.3	RECEIVE NOTICE OF MISSED APPROACH	R/VC	FULL DATA BLOCK	SITUATION DISPLAY	N/A	L	E
A1.3.5.4	PROJECT TRAFFIC SEQUENCE TO ESTABLISH/ MODIFY DEPARTURE FLOW	A	N/A	N/A	N/A	H	M
A1.3.6	MONITORING NON-CONTROLLED OBJECTS						
A1.3.6.1	OBSERVE AIRSPACE INTRUSION BY A NON-CONTROLLED OBJECT	R	TARGET POSITION SYMBOL, SECTOR BOUNDARY, PRIMARY TARGET CLASS	SITUATION DISPLAY	N/A	L	M
A1.3.6.2	ENTER CONTROLLER NOTE	E	N/A	N/A	ENTER CONTROLLER ANNOTATION	L	L
A1.3.6.3	FLIGHT-FOLLOW AN OBSERVED NON-CONTROLLED OBJECT	E/R/A	TARGET POSITION SYMBOL	SITUATION DISPLAY	FLIGHT ID, TRACK ACTION (START), TRACK START POSITION, HEADING, SPEED, TRACK	L	M
A1.3.6.4	FORWARD NOTICE OF AIRSPACE INTRUSION BY A NON-CONTROLLED OBJECT	E/VC	N/A	N/A	TEXTUAL ATC MAIL	L	L
A1.3.6.5	RECEIVE NOTICE OF AIRSPACE INTRUSION BY A NON-CONTROLLED OBJECT	R/VC	INTRUSION	TEXTUAL ATC MAIL	N/A	L	L
A1.3.7	RESPONDING TO TEMPORARY RELEASE OF AIRSPACE REQUESTS						
A1.3.7.1	RECEIVE CONTROLLER/ SUPERVISOR REQUEST FOR TEMPORARY USE OF AIRSPACE	R/VC	REQUEST FOR TEMPORARY USE OF AIRSPACE	TEXTUAL ATC MAIL	N/A	L	M
A1.3.7.2	FORWARD APPROVAL FOR TEMPORARY USE OF AIRSPACE	E/VC	N/A	N/A	TEXTUAL ATC MAIL	L	M
A1.3.7.3	FORWARD DENIAL OF TEMPORARY USE OF AIRSPACE	E/VC	N/A	N/A	TEXTUAL ATC MAIL	L	M
A1.3.7.4	SUPPRESS MAP ASSOCIATED WITH TEMPORARY USE OF AIRSPACE	E	N/A	N/A	INHIBIT CATEGORY OF GEOGRAPHIC MAP DATA	L	L
A1.3.7.5	DISCUSS RELEASE OF AIRSPACE FOR TEMPORARY USE WITH SUPERVISOR/ OTHER CONTROLLER	A/VC	N/A	N/A	N/A	L	L
A1.3.7.6	SELECT MAP DISPLAY OF ADAPTED AIRSPACE REQUESTED FOR USE BY ANOTHER CONTROLLER	E	N/A	N/A	SELECT CATEGORY OF GEOGRAPHIC MAP DATA	L	L
A1.3.7.7	EVALUATE FEASIBILITY OF RELEASING AIRSPACE TEMPORARILY	R/A	FULL DATA BLOCK, FLIGHT DATA ENTRY	SITUATION DISPLAY, FLIGHT DATA DISPLAY	N/A	L	L
A1.3.7.8	RECEIVE NOTIFICATION OF RETURN OF RELEASED AIRSPACE	R/VC	RELEASED AIRSPACE NOTIFICATION	TEXTUAL ATC MAIL	N/A	L	M
A1.3.8	REQUESTING TEMPORARY RELEASE OF AIRSPACE						
A1.3.8.1	REQUEST TEMPORARY USE OF AIRSPACE	E/VC	N/A	N/A	TEXTUAL ATC MAIL	L	M
A1.3.8.2	RECEIVE RELEASE/ USE OF AIRSPACE	R/VC	RELEASE/ USE OF AIRSPACE	TEXTUAL ATC MAIL	N/A	L	L
A1.3.8.3	RECEIVE REJECTION OF USE OF AIRSPACE	R/VC	REJECTION OF USE OF AIRSPACE	TEXTUAL ATC MAIL	N/A	L	M

Task Information Requirements

Task Number	Task Statement	Task Type	Information Received	Information Source	Information Entered	Freq	Crit
A1.3.8.4	FORWARD NOTICE OF RETURN OF RELEASED AIRSPACE	E/VC	N/A	N/A	TEXTUAL ATC MAIL	L	M
A1.4	ROUTE OR PLAN FLIGHTS						
A1.4.1	PLANNING CLEARANCES						
A1.4.1.1	RECEIVE CONTROLLER NOTICE ON REQUESTED CLEARANCE OF AIRCRAFT LEAVING HIS SECTOR	R/VC	REQUESTED CLEARANCE	TEXTUAL ATC MAIL	N/A	L	M
A1.4.1.2	RECEIVE CLEARANCE REQUEST FROM ATCT/ FSS/ PILOT/ SUPERVISOR	R/VC	CLEARANCE REQUEST	TEXTUAL ATC MAIL	N/A	M	M
A1.4.1.3	RECEIVE CONTROLLER REQUEST FOR CLEARANCE/ APPROVAL	R/VC	CLEARANCE/ APPROVAL REQUEST	TEXTUAL ATC MAIL	N/A	H	M
A1.4.1.4	FORWARD CLEARANCE REQUEST TO ANOTHER CONTROLLER	E/VC	N/A	N/A	TEXTUAL ATC MAIL	H	M
A1.4.1.5	REQUEST CLEARANCE/ APPROVAL FROM ANOTHER CONTROLLER	E/VC	N/A	N/A	TEXTUAL ATC MAIL	H	M
A1.4.1.6	RECEIVE CLEARANCE APPROVAL/ CLEARANCE RESTRICTIONS FROM ANOTHER CONTROLLER	R/VC	CLEARANCE APPROVAL/ RESTRICTIONS	TEXTUAL ATC MAIL	N/A	H	H
A1.4.1.7	RECEIVE CLEARANCE DISAPPROVAL/ DENIAL FROM ANOTHER CONTROLLER	R/VC	CLEARANCE DISAPPROVAL/ DENIAL	TEXTUAL ATC MAIL	N/A	L	M
A1.4.1.8	RECEIVE ALTERNATE SUGGESTION FOR CLEARANCE/ APPROVAL REQUESTED OF ANOTHER CONTROLLER	R/VC	ALTERNATE SUGGESTION FOR CLEARANCE	TEXTUAL ATC MAIL	N/A	L	M
A1.4.1.10	REVIEW POTENTIAL IMPEDIMENTS FOR IMPACT ON PROPOSED CLEARANCE	R/A	TARGET POSITION SYMBOL, OBSTRUCTION, SPECIAL USE AIRSPACE BOUNDARY, FDE	SITUATION DISPLAY, FLIGHT DATA DISPLAY, SPECIAL LISTS	N/A	H	M
A1.4.1.12	DISCUSS CLEARANCE ALTERNATIVES WITH PILOT	VC	N/A	N/A	N/A	L	M
A1.4.1.13	EVALUATE FDE CHANGES FOR CLEARANCE PLANNING OR FUTURE ACTIONS	R/A	FLIGHT DATA ENTRY	FLIGHT DATA DISPLAY	N/A	L	M
A1.4.1.14	DETERMINE PRIORITY OF CONTROL ACTIONS	A	N/A	N/A	N/A	H	H
A1.4.1.15	PERCEIVE NEED FOR AMENDED CLEARANCE	R/A	FLIGHT DATA ENTRY, POSITION SYMBOL	FLIGHT DATA DISPLAY, SITUATION DISPLAY	N/A	H	H
A1.4.1.16	FORMULATE CONTROLLER PLAN OF ACTION FOR CLEARANCE GENERATION	A	N/A	N/A	N/A	H	H
A1.4.1.75	DETERMINE APPROPRIATE MENTAL PLAN FOR AIRCRAFT CLEARANCE	A	N/A	N/A	N/A	H	H
A1.4.2	RESPONDING TO CONTINGENCIES						
A1.4.2.1	DECLARE EMERGENCY AND INVOKE CONTINGENCY PLAN	ERA/VC	CONTINGENCY PLAN CHECKLIST	STATIC INFORMATION DISPLAY	TEXTUAL ATC MAIL	L	E
A1.4.2.2	RECEIVE NOTICE OF PILOT OR AIRCRAFT HAVING A PROBLEM (E.G., OVERDUE, LOSS OF RADIO CONTACT)	R/VC	PILOT OR AIRCRAFT PROBLEM	TEXTUAL ATC MAIL	N/A	L	E

Task Information Requirements

Task Number	Task Statement	Task Type	Information Received	Information Source	Information Entered	Freq	Crit
A1.4.2.3	ISSUE INSTRUCTIONS TO PILOT (NORDO) FOR IDENTIFICATION TURN/ TRANSPONDER RESPONSE	VC	N/A	N/A	N/A	L	H
A1.4.2.4	DETECT A PILOT OR AIRCRAFT PROBLEM (E.G., HYPOXIA, EXCEPTION BEACON CODE)	R/A/VC	PILOT OR AIRCRAFT PROBLEM, EXCEPTION BEACON CODE, ALTITUDE NONCONFORMANCE INDICATOR, AIRCRAFT SPECIAL CONDITION	OBSERVATION OF ERRATIC PILOT BEHAVIOR, FULL DATA BLOCK	N/A	L	H
A1.4.2.5	FORWARD CONTINGENCY INFORMATION TO SUPERVISOR/ ANOTHER CONTROLLER	E/VC	N/A	N/A	TEXTUAL ATC MAIL	L	H
A1.4.2.6	INFORM DESIGNATED PERSONNEL OF AIRCRAFT HAVING FLIGHT PROBLEMS	E/VC	N/A	N/A	TEXTUAL ATC MAIL	L	H
A1.4.2.7	REQUEST RELAY OF INSTRUCTIONS TO PILOT (NORDO) FOR IDENTIFICATION TURN/ TRANSPONDER RESPONSE	E/VC	N/A	N/A	TEXTUAL ATC MAIL	L	M
A1.4.2.8	CONDUCT SEARCH FOR AIRCRAFT WITHOUT RADIO CONTACT	E/A/VC	N/A	N/A	TEXTUAL ATC MAIL	L	H
A1.4.2.9	OBSERVE AIRCRAFT TURN/ TRANSPONDER RESPONSE FOLLOWING IDENTIFICATION REQUEST	R/A	TARGET POSITION SYMBOL, BEACON CODE	SITUATION DISPLAY	N/A	M	H
A1.4.2.10	CONDUCT RADIO/ RADAR SEARCH FOR OVERDUE AIRCRAFT	R/A/VC	BEACON CODE, DATA BLOCK, TARGET POSITION SYMBOL	SITUATION DISPLAY	N/A	L	H
A1.4.2.11	RECEIVE SUPERVISOR NOTICE OF EMERGENCY DECLARED AND CONTINGENCY PLAN INVOKED	R/VC	EMERGENCY, CONTINGENCY PLAN	TEXTUAL ATC MAIL	N/A	L	E
A1.4.2.12	RECEIVE SUPERVISOR NOTICE TO CONDUCT COMMUNICATIONS SEARCH FOR OVERDUE/ NORDO AIRCRAFT	R/VC	NOTICE TO CONDUCT AIRCRAFT SEARCH	TEXTUAL ATC MAIL	N/A	L	H
A1.4.2.13	RECEIVE NOTICE THAT SUPERVISOR WILL CONDUCT COMMUNICATIONS SEARCH FOR OVERDUE/ NORDO AIRCRAFT	R/VC	SUPERVISOR SEARCH FOR AIRCRAFT	TEXTUAL ATC MAIL	N/A	L	M
A1.4.2.14	RECEIVE PILOT NOTICE OF EMERGENCY DECLARED	R/VC	AIRCRAFT SPECIAL CONDITION	FULL DATA BLOCK	N/A	L	E
A1.4.3	RECOGNIZING SPECIAL OPERATIONS						
A1.4.3.1	PERCEIVE PRESENCE OF SPECIAL OPERATION	R/A	CALLSIGN, ROUTE OF FLIGHT, PRESENCE OF DATA BLOCK IN SPECIAL USE AIRSPACE, SPECIAL HANDLING REMARKS IN FLIGHT DATA ENTRY	SITUATION DISPLAY, FLIGHT DATA DISPLAY	N/A	L	H
A1.4.3.2	RECEIVE REVIEW/ NOTICE OF SPECIAL OPERATION	R/VC	SPECIAL OPERATION INFORMATION	TEXTUAL ATC MAIL	N/A	L	M
A1.4.3.3	FORWARD NOTICE OF SPECIAL OPERATIONS TO ANOTHER CONTROLLER/ SUPERVISOR	E/VC	N/A	N/A	TEXTUAL ATC MAIL	L	M
A1.4.4	REVIEWING FLIGHT PLANS						

Task Information Requirements

Task Number	Task Statement	Task Type	Information Received	Information Source	Information Entered	Freq	Crit
A1.4.4.1	OBSERVE NEW FLIGHT PLAN POSTING	R	FLIGHT DATA ENTRY	FLIGHT DATA DISPLAY	N/A	M	M
A1.4.4.2	REVIEW FLIGHT PLAN FOR COMPLETENESS	R/A	FLIGHT DATA ENTRY	FLIGHT DATA DISPLAY	N/A	L	M
A1.4.4.3	ENTER FLIGHT PLAN	E	N/A	N/A	CALLSIGN, PLAN DATA, FLIGHT PLAN	L	L
A1.4.4.4	ACKNOWLEDGE NEW FLIGHT PLAN RECEIPT	E	N/A	N/A	ACKNOWLEDGE FDE POSTING	L	L
A1.4.4.5	REVIEW FLIGHT PLAN FOR ERRORS/ DATA LIST SEQUENCE	R/A	FLIGHT DATA ENTRY	FLIGHT DATA DISPLAY	N/A	L	L
A1.4.4.6	RECEIVE FLIGHT PLAN FROM PILOT	VC	N/A	N/A	N/A	L	L
A1.4.4.7	RECEIVE FLIGHT PLAN VERBALLY FORWARDED	VC	N/A	N/A	N/A	L	L
A1.4.4.8	QUERY PILOT ABOUT FLIGHT PLAN	VC	N/A	N/A	N/A	L	M
A1.4.4.9	QUERY THE RELAYER OF A FLIGHT PLAN	E/VC	N/A	N/A	TEXTUAL ATC MAIL	L	M
A1.4.4.10	FORWARD FLIGHT PLAN VERBALLY	VC	N/A	N/A	N/A	L	M
A1.4.4.11	ENTER STEREO FLIGHT PLAN	E	N/A	N/A	CALLSIGN, PLAN DATA, STEREO FLIGHT PLAN	L	L
A1.4.4.12	ENTER VFR FLIGHT PLAN	E	N/A	N/A	CALLSIGN, PLAN DATA, VFR FLIGHT PLAN	L	L
A1.4.4.13	REQUEST FLIGHT PLAN READOUT	E	N/A	N/A	FLIGHT ID, DATA DESCRIPTION, QUERY DATA BASE FOR SELECTED READOUT	L	L
A1.4.4.14	ENTER SCRATCH PAD DATA IN FULL DATA BLOCK	E	N/A	N/A	FLIGHT ID, SCRATCH PAD DATA	M	M
A1.4.5	PROCESSING FLIGHT PLAN AMENDMENTS						
A1.4.5.1	RECEIVE FLIGHT DATA REVISION	R	FLIGHT DATA ENTRY	FLIGHT DATA DISPLAY	N/A	L	H
A1.4.5.2	EMPHASIZE FLIGHT DATA ENTRY POSTING FOR REMINDER ACTION	E	N/A	N/A	FLIGHT ID, FIELD TO BE EMPHASIZED, EMPHASIZED DATA (ENTER), FDE AND DATA FIELD EMPHASIS	L	M
A1.4.5.3	ENTER FLIGHT PLAN AMENDMENT	E	N/A	N/A	FLIGHT ID, FIELD TO BE MODIFIED, NEW DATA, FLIGHT DATA AMENDMENT	M	H
A1.4.5.4	ENTER PILOT'S POSITION REPORT IN SYSTEM	E	N/A	N/A	FLIGHT ID, FIX, ACTUAL TIME AT FIX, PILOT ESTIMATE AT FIX, NEXT FIX, PILOT ESTIMATE AT NEXT FIX, ALTITUDE, PROGRESS REPORT	L	M
A1.4.5.5	DELETE FLIGHT DATA ENTRY EMPHASIS	E	N/A	N/A	FLIGHT ID, FIELD TO BE DEEMPHASIZED, EMPHASIZED DATA (DELETE), FDE AND DATA FIELD EMPHASIS	L	L
A1.4.5.6	RECEIVE FLIGHT PLAN AMENDMENT VERBALLY FORWARDED	VC	N/A	N/A	N/A	L	M
A1.4.5.7	RECEIVE PILOT'S POSITION REPORT	VC	N/A	N/A	N/A	L	H

Task Information Requirements

Task Number	Task Statement	Task Type	Information Received	Information Source	Information Entered	Freq	Crit
A1.4.5.8	FORWARD FLIGHT PLAN AMENDMENT VERBALLY	VC	N/A	N/A	N/A	L	M
A1.4.5.9	INFORM CONTROLLER UNABLE FLIGHT PLAN AMENDMENT	E/VC	N/A	N/A	TEXTUAL ATC MAIL	L	M
A1.4.5.10	RECEIVE CONTROLLER ADVICE OF UNABLE FLIGHT PLAN AMENDMENT	R/VC	UNABLE FLIGHT PLAN AMENDMENT	TEXTUAL ATC MAIL	N/A	L	H
A1.4.5.11	RECEIVE REQUESTED FLIGHT PLAN CHANGES	R/VC	REQUESTED FLIGHT PLAN CHANGE	TEXTUAL ATC MAIL	N/A	L	M
A1.4.6	RECEIVING TRANSFER OF CONTROL/ RADAR IDENTIFICATION						
A1.4.6.1	RECEIVE HANDOFF REQUEST	R/VC	HANDOFF STATUS/ INDICATOR	FULL DATA BLOCK	N/A	L	H
A1.4.6.2	DENY HANDOFF	E/VC	N/A	N/A	FLIGHT ID, REJECT INDICATOR, REJECT HANDOFF	L	H
A1.4.6.3	ACCEPT VERBAL HANDOFF/ INITIATE MANUAL TRACK START	E/R/VC	TARGET POSITION SYMBOL	SITUATION DISPLAY	FLIGHT ID, TRACK ACTION (START), TRACK START POSITION, HEADING, SPEED, ASSIGNED ALTITUDE, TRACK	L	H
A1.4.6.4	ACCEPT AUTOMATIC HANDOFF	E	N/A	N/A	FLIGHT ID, ACCEPT HANDOFF	H	H
A1.4.6.5	DETERMINE THAT AIRCRAFT IS ENTERING SECTOR	A	N/A	N/A	N/A	H	H
A1.4.6.6	DETERMINE RESPONSE TO HANDOFF REQUEST	R/A	FULL DATA BLOCK, GEOGRAPHIC MAP DATA, TARGET SYMBOL	SITUATION DISPLAY	N/A	H	H
A1.4.6.7	RECEIVE CONTROL OF AIRCRAFT	R/VC	CONTROL OF AIRCRAFT	TEXTUAL ATC MAIL	N/A	L	H
A1.4.6.8	REQUEST TRANSFER OF CONTROL	E/VC	N/A	N/A	TEXTUAL ATC MAIL	L	H
A1.4.7	INITIATING TRANSFER OF CONTROL/ RADAR IDENTIFICATION						
A1.4.7.1	INITIATE HANDOFF FUNCTION	E	N/A	N/A	FLIGHT ID, SECTOR/ FACILITY, INITIATE HANDOFF	L	H
A1.4.7.2	OBSERVE AUTOMATIC INITIATION OF HANDOFF	R/A	HANDOFF STATUS/ INDICATOR	FULL DATA BLOCK	N/A	H	H
A1.4.7.3	RETRACT HANDOFF	E/VC	N/A	N/A	FLIGHT ID, RETRACT HANDOFF	L	H
A1.4.7.4	RECEIVE HANDOFF ACCEPTANCE	R/VC	HANDOFF STATUS/ INDICATOR, ACCEPTED	FULL DATA BLOCK	N/A	H	H
A1.4.7.5	DISCUSS TRANSFER OF CONTROL WITH OTHER CONTROLLER	VC	N/A	N/A	N/A	L	H
A1.4.7.6	INITIATE VERBAL HANDOFF	VC	N/A	N/A	N/A	L	H
A1.4.7.7	RECEIVE REQUEST FOR TRANSFER OF CONTROL	R/VC	REQUEST FOR TRANSFER OF CONTROL	TEXTUAL ATC MAIL	N/A	L	H
A1.4.7.8	DETERMINE THAT AIRCRAFT IS LEAVING SECTOR	R/A	GEOGRAPHIC MAP DATA, TARGET POSITION SYMBOL	STATIC INFORMATION DISPLAY	N/A	H	H
A1.4.7.9	DETECT MANUAL HANDOFF MODE INDICATION	R	HANDOFF ALERT INDICATION, AUTO HANDOFF INHIBITED	FULL DATA BLOCK	N/A	L	M

Task Information Requirements

Task Number	Task Statement	Task Type	Information Received	Information Source	Information Entered	Freq	Crit
A1.4.7.10	REQUEST TRANSFER OF FLIGHT PLAN DATA TO ANOTHER FACILITY	E	N/A	N/A	FLIGHT ID, FACILITY, TRANSFER FLIGHT PLAN	L	M
A1.4.7.11	INFORM CONTROLLER OF ANY CONDITIONS AFFECTING TRANSFER OF CONTROL	E/VC	N/A	N/A	TEXTUAL ATC MAIL	L	H
A1.4.7.12	INFORM CONTROLLER OF RELINQUISHED CONTROL OF AIRCRAFT	E/VC	N/A	N/A	TEXTUAL ATC MAIL	M	H
A1.4.7.13	DETECT HANDOFF ALERT INDICATION	R	HANDOFF ALERT INDICATION, HANDOFF NOT ACCEPTED	FULL DATA BLOCK	N/A	L	H
A1.4.7.14	REDIRECT HANDOFF	E	N/A	N/A	FLIGHT ID, SECTOR/FACILITY, REDIRECT HANDOFF	L	H
A1.4.7.15	RECEIVE HANDOFF REJECTION	R/VC	HANDOFF STATUS/ INDICATOR, REJECTED	FULL DATA BLOCK	N/A	L	E
A1.4.8	ISSUING POINTOUTS						
A1.4.8.1	INITIATE POINTOUT	E/VC	N/A	N/A	N/A	L	H
A1.4.8.3	FORCE FLIGHT DATA ENTRY TO ANOTHER CONTROLLER	E	N/A	N/A	FLIGHT ID, SECTOR POSTING NUMBER, SECTOR NUMBER, FDE POINTOUT	L	M
A1.4.8.4	RECEIVE ACCEPTANCE OF POINTOUT	R/VC	POINTOUT INDICATOR, ACCEPT	FULL DATA BLOCK	N/A	M	H
A1.4.8.5	RECEIVE REJECTION OF POINTOUT	R/VC	POINTOUT INDICATOR, REJECT	FULL DATA BLOCK	N/A	L	H
A1.4.8.7	DISCUSS POINTOUT WITH OTHER CONTROLLER	VC	N/A	N/A	N/A	L	H
A1.4.9	RESPONDING TO POINTOUTS						
A1.4.9.1	RECEIVE POINTOUT	R/VC	POINTOUT INDICATOR, INITIATING SECTOR/ POSITION ID	FULL DATA BLOCK	N/A	M	H
A1.4.9.2	ACCEPT POINTOUT	E/VC	N/A	N/A	FLIGHT ID, POINTOUT ACCEPT	M	H
A1.4.9.3	DENY POINTOUT	E/VC	N/A	N/A	FLIGHT ID, REJECT INDICATOR, REJECT POINTOUT	L	H
A1.4.9.4	SUPPRESS FULL DATA BLOCK AFTER POINTOUT	E	N/A	N/A	FLIGHT ID, FORCE DATA BLOCK (REMOVE)	L	L
A1.4.9.5	DETERMINE RESPONSE TO POINTOUT	R/A	DATA BLOCK, FLIGHT DATA ENTRY, GEOGRAPHIC MAP DATA	SITUATION DISPLAY, FLIGHT DATA DISPLAY	N/A	L	H
A1.4.10	ISSUING CLEARANCES						
A1.4.10.2	APPROVE CLEARANCE REQUEST	E/VC	N/A	N/A	TEXTUAL ATC MAIL	H	H
A1.4.10.3	SUGGEST CLEARANCE ALTERNATIVES TO PILOT	VC	N/A	N/A	N/A	M	M
A1.4.10.4	FORMULATE A CLEARANCE WITH APPROPRIATE INSTRUCTIONS	A	N/A	N/A	N/A	H	H
A1.4.10.5	ISSUE CLEARANCE AND INSTRUCTIONS TO PILOT	VC	N/A	N/A	N/A	H	H
A1.4.10.6	ISSUE CLEARANCE THROUGH ATCT/FSS FOR RELAY TO PILOT	E/VC	N/A	N/A	TEXTUAL ATC MAIL	L	H

Task Number	Task Statement	Task Type	Information Received	Information Source	Information Entered	Freq	Crit
A1.4.10.7	VERIFY AIRCRAFT COMPLIANCE WITH CLEARANCE	R/A	TARGET POSITION SYMBOL, FULL DATA BLOCK, POSITION HISTORY	SITUATION DISPLAY	N/A	H	H
A1.4.10.8	QUERY PILOT REGARDING CONFORMANCE WITH CLEARANCE	VC	N/A	N/A	N/A	L	H
A1.4.10.9	DENY CLEARANCE REQUEST	E/VC	N/A	N/A	TEXTUAL ATC MAIL	L	M
A1.4.10.10	SUGGEST ALTERNATIVE TO CLEARANCE REQUEST FROM CONTROLLER	E/VC	N/A	N/A	TEXTUAL ATC MAIL	L	M
A1.4.12	MANAGING AUTOMATED HANDOFF FEATURES						
A1.4.12.1	INHIBIT AUTOMATIC HANDOFF FOR ALL TRACKS OR FOR DESIGNATED TRACK	E	N/A	N/A	FLIGHT ID, SECTOR/ FACILITY, INHIBIT AUTOMATIC HANDOFF	L	L
A1.4.12.2	RESTORE AUTOMATIC HANDOFF FOR ALL TRACKS OR FOR DESIGNATED TRACK	E	N/A	N/A	FLIGHT ID, SECTOR/ FACILITY, ENABLE AUTOMATIC HANDOFF	L	L
A1.4.13	ESTABLISHING, MAINTAINING, AND TERMINATING RADIO COMMUNICATIONS						
A1.4.13.1	RECEIVE REQUEST TO CANCEL AIR TRAFFIC SERVICES	VC	N/A	N/A	N/A	L	L
A1.4.13.2	TERMINATE RADIO COMMUNICATIONS WITH AIRCRAFT	VC	N/A	N/A	N/A	L	L
A1.4.13.3	RECEIVE ARRIVAL MESSAGE	VC	N/A	N/A	N/A	L	M
A1.4.13.4	DETERMINE FREQUENCY IN USE BY RECEIVING SECTOR	R/A	RADIO FREQUENCY, COMMUNICATION STATUS, SECTOR FREQUENCY	SYSTEM STATUS DATA DISPLAY, VSCS A/G DISPLAY, STATIC INFORMATION DISPLAY	N/A	L	M
A1.4.13.5	ISSUE CHANGE OF FREQUENCY TO PILOT	VC	N/A	N/A	N/A	H	M
A1.4.13.6	RECEIVE INITIAL RADIO CONTACT FROM PILOT	VC	N/A	N/A	N/A	H	H
A1.4.13.7	ISSUE ALTIMETER SETTING	R/VC	BAROMETRIC PRESSURE (OASI)	AIRPORT ENVIRONMENTAL DATA DISPLAY	N/A	H	M
A1.4.13.8	VERIFY AIRCRAFT ALTITUDE	R/A/VC	FULL DATA BLOCK, FLIGHT DATA ENTRY	SITUATION DISPLAY, FLIGHT DATA DISPLAY	N/A	H	H
A1.4.14	ESTABLISHING/ REESTABLISHING RADAR IDENTIFICATION						
A1.4.14.1	OBSERVE TARGET ENTERING RADAR COVERAGE	R/A	TARGET SYMBOL, FULL DATA BLOCK, LIMITED DATA BLOCK	SITUATION DISPLAY	N/A	H	M
A1.4.14.2	INFORM PILOT THAT RADAR CONTACT IS ESTABLISHED	VC	N/A	N/A	N/A	H	M
A1.4.14.3	CONDUCT RADAR IDENTIFICATION PROCEDURES	R/VC	TARGET POSITION SYMBOL, BACKGROUND DESCRIPTOR, DATA BLOCK	SITUATION DISPLAY	N/A	M	H
A1.5	ASSESS WEATHER IMPACT						

Task Number	Task Statement	Task Type	Information Received	Information Source	Information Entered	Freq	Crit
A1.5.1	RESPONDING TO SIGNIFICANT WEATHER INFORMATION						
A1.5.1.3	RECEIVE WEATHER BRIEFING FROM METEOROLOGIST	R/VC	WEATHER BRIEFING	TEXTUAL ATC MAIL	N/A	L	H
A1.5.1.5	DETERMINE WHETHER ANOTHER CONTROLLER OR PILOT NEEDS WEATHER ADVISORY	A	N/A	N/A	N/A	L	M
A1.5.1.9	ISSUE WEATHER/ ADVISORY/ UPDATE TO PILOT/ ANOTHER CONTROLLER	E/VC	N/A	N/A	TEXTUAL ATC MAIL	L	H
A1.5.1.10	INFORM SUPERVISOR/ TMC OF WEATHER IMPACT ON ROUTES/ FLOW	E/VC	N/A	N/A	TEXTUAL ATC MAIL	L	H
A1.5.1.12	RECEIVE WEATHER ADVISORY FROM ANOTHER CONTROLLER/ SUPERVISOR/ METEOROLOGIST	R/VC	WEATHER ADVISORY	TEXTUAL ATC MAIL	N/A	L	H
A1.5.1.13	RECEIVE CONTROLLER REQUEST FOR WEATHER INFORMATION	R/VC	REQUEST WEATHER INFORMATION	TEXTUAL ATC MAIL	N/A	L	M
A1.5.1.14	FORWARD WEATHER INFORMATION TO SUPERVISOR/ METEOROLOGIST	E/VC	N/A	N/A	TEXTUAL ATC MAIL	L	M
A1.5.1.16	BROADCAST RECORDED WEATHER INFORMATION	VC	N/A	N/A	N/A	L	M
A1.5.1.18	REQUEST SUPERVISOR/ TMC TO RELEASE AIRSPACE	E/VC	N/A	N/A	TEXTUAL ATC MAIL	L	L
A1.5.1.22	ENTER AIRPORT ENVIRONMENTAL DATA INTO SYSTEM	E	N/A	N/A	AIRPORT ID, AIRPORT ENVIRONMENTAL DATA	L	M
A1.5.1.75	OBSERVE DISPLAY OF WEATHER LINE/ INTENSITY/ MOVEMENT	R/A	WEATHER DESCRIPTOR	SITUATION DISPLAY	N/A	L	H
A1.5.1.76	DETERMINE WEATHER IMPACT ON ROUTES/ FLOW	A	N/A	N/A	N/A	L	H
A1.5.1.77	DETERMINE ALTITUDE/ROUTE CHANGE TO BYPASS SEVERE WEATHER	A	N/A	N/A	N/A	L	H
A1.5.1.78	EVALUATE IMPACT OF NEW A&M CONDITION	R/A	A&M DATA	AIRPORT ENVIRONMENTAL DATA DISPLAY, ATC MAIL	N/A	L	M
A1.5.1.79	RECEIVE PIREP ON WEATHER	VC	N/A	N/A	N/A	L	M
A1.5.1.80	RECEIVE NEW ROUTING FOR WEATHER AVOIDANCE FROM SUPERVISOR/ TMC	R/VC	USAGE OF ADAPTED ROUTES, FLIGHT DATA ENTRY	SYSTEM STATUS DATA DISPLAY, FLIGHT DATA DISPLAY, TEXTUAL ATC MAIL	N/A	L	H
A1.5.1.81	FORWARD URGENT PIREP TO OTHER CONTROLLER	VC	N/A	N/A	N/A	L	H
A1.5.1.82	RECORD PIREP NOTE	E	N/A	N/A	PIREP	L	M
A1.5.1.83	REQUEST WEATHER INFORMATION	E/VC	N/A	N/A	TEXTUAL ATC MAIL	L	M
A1.5.2	PROCESSING WEATHER REPORTS						

Task Information Requirements

Task Number	Task Statement	Task Type	Information Received	Information Source	Information Entered	Freq	Crit
A1.5.2.1	RECEIVE AIRPORT SPECIFIC NOTAM	R/VC	CURRENT NOTAM, AIRPORT INFORMATION	AIRPORT ENVIRONMENTAL DATA DISPLAY, TEXTUAL ATC MAIL	N/A	L	L
A1.5.2.2	RECEIVE WEATHER REPORT UPDATE (E.G., HOURLY SURFACE OBSERVATION)	R/VC	WEATHER REPORT, RECORDED WEATHER	TEXTUAL ATC MAIL	N/A	L	M
A1.5.2.4	DETERMINE WHETHER RUNWAY CONDITIONS HAVE CHANGED	R/A	RUNWAY ALERT DATA	AIRPORT ENVIRONMENTAL DATA DISPLAY, AIRPORT INFORMATION	N/A	M	H
A1.5.2.5	DETERMINE WHETHER CONTROL ZONE IS IFR/VFR	R/A	VISIBILITY, CEILING HEIGHT	AIRPORT ENVIRONMENTAL DATA DISPLAY	N/A	L	H
A1.5.2.6	REVIEW ATIS VOICE RECORDING	VC/A	N/A	N/A	N/A	M	L
A1.5.2.7	FORWARD RUNWAY USE DATA	E/VC	N/A	N/A	TEXTUAL ATC MAIL	L	M
A1.5.2.9	RECEIVE RUNWAY USE DATA	R/VC	RUNWAY CONFIGURATION, RUNWAY VISUAL RANGE DATA	AIRPORT ENVIRONMENTAL DATA DISPLAY, TEXTUAL ATC MAIL	N/A	L	H
A1.5.2.10	DETECT AIRPORT ENVIRONMENTAL DATA ALERT	R	AIRPORT ENVIRONMENTAL ALERT	AIRPORT ENVIRONMENTAL DATA DISPLAY	N/A	L	M
A1.5.2.11	DETERMINE FAULTY AIRPORT ENVIRONMENTAL SENSOR	R/A	CENTER FIELD WIND DIRECTION/ SPEED/ GUST SPEED, RVR DATA, LOW LEVEL WIND SHEAR ALERT SYSTEM DATA, VORTEX ADVISORY DATA	AIRPORT ENVIRONMENTAL DATA DISPLAY	N/A	L	M
A1.5.2.12	ENTER AIRPORT ENVIRONMENTAL SENSOR DATA OVERRIDE	E	N/A	N/A	SENSOR ID, FALLBACK VALUE, INHIBIT/ PERMIT DATA, SENSOR OVERRIDE	L	L
A1.5.2.13	RECEIVE NOTICE OF FAULTY AIRPORT ENVIRONMENTAL SENSOR	R/VC	FAULTY SENSOR, ATC AIRPORT EQUIPMENT ALERT	SYSTEM STATUS DATA DISPLAY, TEXTUAL ATC MAIL	N/A	L	M
A1.5.2.76	RECEIVE GENERAL NATURE NOTAM	R	NOTAM	TEXTUAL ATC MAIL	N/A	L	L
A1.5.2.77	ACKNOWLEDGE AIRPORT ENVIRONMENTAL DATA ALERT	E	N/A	N/A	ACKNOWLEDGE AIRPORT ENVIRONMENTAL DATA ALERT	L	L
A1.5.2.78	REVIEW DISPLAYED WEATHER INFORMATION	E/R/A	WEATHER DISCRIPTOR, TEXTUAL WEATHER DATA	SITUATION DISPLAY, AIRPORT ENVIRONMENTAL DATA DISPLAY, TEXTUAL ATC MAIL	N/A	H	M
A1.6	MANAGE SECTOR/POSITION RESOURCES						
A1.6.1	BRIEFING RELIEVING CONTROLLERS						
A1.6.1.1	BRIEF RELIEVING CONTROLLER	E/R/VC	POSITION CHECKLIST	STATIC INFORMATION DISPLAY	STATIC INFORMATION ITEM ID, DISPLAY STATIC INFORMATION	L	H
A1.6.1.2	SIGN OFF AT CONSOLE	E	N/A	N/A	USER ID, OPERATIONAL RESPONSIBILITY DESIGNATOR, SIGN OFF	L	L
A1.6.1.3	VERIFY COMPLETENESS OF RELIEF BRIEFING RECEIPT	R/A	POSITION CHECKLIST	STATIC INFORMATION DISPLAY	N/A	L	H
A1.6.2	ASSUMING POSITION RESPONSIBILITY						

Task Information Requirements

Task Number	Task Statement	Task Type	Information Received	Information Source	Information Entered	Freq	Crit
A1.6.2.1	REVIEW SYSTEM STATUS TO DETERMINE CURRENCY/ UPDATE SELF	R/A	SYSTEM STATUS, POSITION CHECKLIST	SYSTEM STATUS DATA DISPLAY, SPECIAL LISTS, STATIC INFORMATION DISPLAY	N/A	L	M
A1.6.2.3	VERIFY THAT ALL REQUIRED PARAMETERS ARE IN PROPER LOCATION	R/A	PARAMETER SETTINGS	LOGICAL DISPLAYS, PHYSICAL CONSOLE SETTINGS	N/A	L	M
A1.6.2.4	SIGN ON AT DESIGNATED CONSOLE	E	N/A	N/A	USER ID, OPERATIONAL RESPONSIBILITY DESIGNATOR, DISPLAY PREFERENCE SET IDENTIFIER, SIGN ON	L	L
A1.6.2.5	ADJUST WORKSTATION TO PERSONAL PREFERENCE	E	N/A	N/A	MODIFY DISPLAY PREFERENCE SET	L	L
A1.6.2.6	CHECK WORKSTATION FOR PROPER CONFIGURATION, USABILITY, AND SATISFACTORY STATUS	R/A	DISPLAY CONFIGURATION, USABILITY, STATUS	LOGICAL DISPLAYS	N/A	M	M
A1.6.2.7	SET UP WORKSTATION ADAPTATION PARAMETERS	E	N/A	N/A	CONSOLE CONFIGURATION EDIT	L	L
A1.6.2.8	REVIEW BRIEFING CHECKLIST/ NOTES TO ASSURE COMPLETENESS OF BRIEFING COVERAGE	E/R/A/VC	POSITION CHECKLIST, FREE-FORM TEXT ITEM	STATIC INFORMATION DISPLAY, CONTROLLER NOTEPAD DISPLAY	STATIC INFORMATION ITEM ID, DISPLAY STATIC INFORMATION	L	M
A1.6.2.9	REQUEST IMPLEMENTATION OF PROGRAMMED PERSONAL PREFERENCE ADJUSTMENTS	E	N/A	N/A	DISP PREF ID, LOGICAL DISP ID, CURRENT DISP SELECTIONS, INVOKE, LOGICAL DISP VIEWPORT LOCATION, PORTION OF PREF SET, DISP/ INVOKE PREF SET	L	L
A1.6.2.10	DETERMINE IF READY TO ACCEPT CONTROL RESPONSIBILITY	A	N/A	N/A	N/A	L	H
A1.6.2.75	REVIEW CURRENT AND PROJECTED TRAFFIC STATUS/ WEATHER	R/A	TRAFFIC, FLIGHT DATA, WEATHER, TRAFFIC MANAGEMENT INFORMATION	ALL LOGICAL DISPLAYS	N/A	M	H
A1.6.3	RESPONDING TO TRANSIENT COMPUTER FAILURES						
A1.6.3.1	DETECT NON-ACCEPTANCE OF INPUT DATA	R/A	OPERATIONAL FUNCTION DEGRADATION/ FAILURE, DATA REJECT MESSAGE	ALL LOGICAL DISPLAYS ON WHICH DATA CAN BE INPUT, COMPUTER OUTAGE	N/A	L	H
A1.6.3.2	INFORM SUPERVISOR OF TRANSIENT EQUIPMENT FAILURE	E/VC	N/A	N/A	TEXTUAL ATC MAIL	L	M
A1.6.4	EXECUTING BACKUP PROCEDURES FOR SECTOR SUITE FAILURES						
A1.6.4.1	DETECT OCCURRENCE OF SECTOR SUITE FAILURE	R/A	SECTOR SUITE MALFUNCTION, COMPUTER OUTAGE	SYSTEM STATUS DATA DISPLAY, ALL OTHER LOGICAL DISPLAYS	N/A	L	H
A1.6.4.2	OBSERVE SECTOR SUITE DATA BASE RESTORATION COMPLETION MESSAGE	R	COMPUTER OUTAGE, SECTOR SUITE OPERATION	SYSTEM STATUS DATA DISPLAY, FLIGHT DATA DISPLAY, SITUATION DISPLAY	N/A	L	H
A1.6.4.3	FORWARD NOTICE OF EQUIPMENT STATUS	E/VC	N/A	N/A	TEXTUAL ATC MAIL	L	H

Task Number	Task Statement	Task Type	Information Received	Information Source	Information Entered	Freq	Crit
A1.6.4.4	RECEIVE STATUS OF SECTOR SUITE FAILURE FROM CONTROLLER / SUPERVISOR	R/VC	STATUS OF SECTOR SUITE FAILURE	TEXTUAL ATC MAIL	N/A	L	H
A1.6.4	REQUEST SPECIFIED DISPLAY DATA BE PRESENTED ON AND CONTROLLED AT A SPECIFIC COMMON CONSOLE	E	N/A	N/A	REQUEST ASSIGNMENT OF LOGICAL DISPLAY TO ONE PHYSICAL DISPLAY	L	H
[illegible].6.5	EXECUTING BACKUP PROCEDURES FOR TAAS FAILURES						
A1.6.5.4	VERIFY COMPUTER ACTION DURING TRANSITION STAGES	E/R/VC	N/A	N/A	N/A	L	H
A1.6.5.6	RECEIVE CONFIRMATION OF COMPUTER ACTION DURING TRANSITION STAGES	VC	N/A	N/A	N/A	L	H
A1.6.5.75	DETECT OCCURRENCE OF TAAS FAILURE	R/A	TAAS FAILURE, COMPUTER OUTAGE	SYSTEM STATUS DATA DISPLAY, ALL OTHER LOGICAL DISPLAYS	N/A	L	H
A1.6.5.76	REVERT TO TAAS BACKUP PROCEDURES (TBD)	TBD	TBD	TBD	TBD	L	H
A1.6.5.77	REVERT TO TAAS EMERGENCY MODE PROCEDURES (TBD)	TBD	TBD	TBD	TBD	L	H
A1.6.5.78	REVERT TO TAAS REDUCED CAPABILITY MODE PROCEDURES (TBD)	TBD	TBD	TBD	TBD	L	H
A1.6.6	EXECUTING BACKUP NAVAID PROCEDURES						
A1.6.6.1	DETERMINE AIRCRAFT NEEDING SUBSTITUTE ROUTING	R/A	CALLSIGN, ROUTE INFORMATION	FLIGHT DATA ENTRY	N/A	L	M
A1.6.6.2	REVIEW STATUS OF QUESTIONABLE NAVAID	R/VC	NAVAID OUTAGE, NAVAID REPAIR SCHEDULE	SYSTEM STATUS DATA DISPLAY	N/A	L	L
A1.6.6.3	OBSERVE SUBSTITUTE ROUTING ON DISPLAY	R	SUBSTITUTE ROUTING, USAGE OF ADAPTED ROUTES	STATIC INFORMATION DISPLAY, SYSTEM STATUS DATA DISPLAY	N/A	L	L
A1.6.6.4	RECEIVE NOTICE OF NAVAID STATUS	R/VC	NAVAID STATUS	TEXTUAL ATC MAIL	N/A	L	M
A1.6.6.5	RECEIVE SUBSTITUTE ROUTING	R/VC	SUBSTITUTE ROUTING	TEXTUAL ATC MAIL	N/A	L	M
A1.6.6.6	RECEIVE CANCELLATION OF SUBSTITUTE ROUTING	R/VC	CANCEL SUBSTITUTE ROUTING	TEXTUAL ATC MAIL	N/A	L	M
A1.6.6.7	FORWARD NAVAID STATUS TO ANOTHER CONTROLLER/ SUPERVISOR/ PILOT	E/VC	N/A	N/A	TEXTUAL ATC MAIL	L	M
A1.6.6.8	FORWARD SUBSTITUTE ROUTING	E/VC	N/A	N/A	TEXTUAL ATC MAIL	L	H
A1.6.6.9	DELETE PREVIOUS SUBSTITUTE ROUTING	E/VC	N/A	N/A	TEXTUAL ATC MAIL	L	M
A1.6.6.10	DISCUSS APPROPRIATENESS WITH SUPERVISOR OF RELEASING EQUIPMENT TO MAINTENANCE	A/VC	N/A	N/A	N/A	L	L
A1.6.6.11	REVIEW NEED/ CANCELLATION OF SUBSTITUTE ROUTING WITH SUPERVISOR	A/VC	N/A	N/A	N/A	L	L

Task Number	Task Statement	Task Type	Information Received	Information Source	Information Entered	Freq	Crit
A1.6.6.12	RECEIVE SUPERVISOR NOTICE OF EQUIPMENT RELEASED TO MAINTENANCE	R/VC	EQUIPMENT RELEASED TO MAINTENANCE	TEXTUAL ATC MAIL	N/A	L	M
A1.6.7	EXECUTING BACKUP PROCEDURES FOR COMMUNICATION FAILURES						
A1.6.7.1	DETECT COMMUNICATION FAILURE	VC/A	N/A	N/A	N/A	L	H
A1.6.7.2	FORWARD ALTERNATE COMMUNICATION PATH	E/VC	N/A	N/A	TEXTUAL ATC MAIL	L	H
A1.6.7.3	RECEIVE NEW FREQUENCY ASSIGNMENT	R/VC	NEW FREQUENCY	TEXTUAL ATC MAIL	N/A	L	H
A1.6.7.4	FORWARD NOTICE OF COMMUNICATION STATUS	E/VC	N/A	N/A	TEXTUAL ATC MAIL	L	M
A1.6.7.5	FORWARD NEW FREQUENCY ASSIGNMENT TO ANOTHER CONTROLLER/SUPERVISOR	E/VC	N/A	N/A	TEXTUAL ATC MAIL	L	H
A1.6.7.6	RECEIVE NOTICE OF ALTERNATE COMMUNICATION PATH	R/VC	ALTERNATE COMMUNICATION PATH	TEXTUAL ATC MAIL	N/A	L	H
A1.6.8	MANAGING PERSONAL WORKLOAD						
A1.6.8.1	DETERMINE IMPENDING CONTROLLER OVERLOAD	A	N/A	N/A	N/A	L	H
A1.6.8.3	REQUEST ASSISTANCE OR RELIEF	E/VC	N/A	N/A	TEXTUAL ATC MAIL	L	H
A1.6.8.4	REQUEST FLOW CONTROL BE IMPOSED	E/VC	N/A	N/A	TEXTUAL ATC MAIL	L	H
A1.6.9	PERFORMING PROCEDURES FOR NON-RADAR ENVIRONMENT						
A1.6.9.1	INFORM PILOT OF RADAR CONTACT LOST	VC	N/A	N/A	N/A	L	M
A1.6.9.2	REASSOCIATE DATA BLOCK	E	N/A	N/A	FLIGHT ID, NEW COORDINATE POSITION, TRACK REPOSITION	L	M
A1.6.9.3	OBSERVE DATA BLOCK NOT ASSOCIATED WITH TARGET	R	DATA BLOCK, TARGET POSITION SYMBOL	SITUATION DISPLAY	N/A	L	M
A1.6.9.4	TERMINATE RADAR SERVICE TO AIRCRAFT	VC	N/A	N/A	N/A	L	M
A1.6.9.5	INITIATE USE OF NON-RADAR SEPARATION STANDARDS	R/A	FULL DATA BLOCK, TARGET POSITION SYMBOL, FLIGHT DATA ENTRY	FLIGHT DATA DISPLAY, SITUATION DISPLAY	N/A	L	H
A1.6.9.7	INITIATE USE OF RADAR SEPARATION STANDARDS	R/A	FULL DATA BLOCK, TARGET POSITION SYMBOL	SITUATION DISPLAY	N/A	L	M
A1.6.9.8	REQUEST PILOT POSITION REPORTS	VC	N/A	N/A	N/A	L	H
A1.6.9.9	OBSERVE RETURN OF NORMAL RADAR ENVIRONMENT	R/A	FULL DATA BLOCK, TARGET POSITION SYMBOL	SITUATION DISPLAY	N/A	L	H
A1.6.9.10	OBSERVE AIRCRAFT TRACK IN COAST MODE	R	COAST INDICATOR, TRACK STATUS	TRACK POSITION SYMBOL, FULL DATA BLOCK	N/A	L	H
A1.6.9.75	REQUEST READOUT OF ASSIGNED/ REPORTED BEACON CODE	E/R/A	ASSIGNED/ REPORTED BEACON CODE	SYSTEM MESSAGE READOUT	QUERY DATA BASE FOR SELECTED READOUT (BEACON CODE)	L	M

Task Information Requirements

Task Number	Task Statement	Task Type	Information Received	Information Source	Information Entered	Freq	Crit
A1.6.10	EXECUTING BACKUP PROCEDURES FOR LOSS OF FLIGHT PLAN DATA BASE						
A1.6.10.1	OBSERVE MESSAGE ON LOSS OF FLIGHT PLAN DATA BASE	R	OPERATIONAL FUNCTION DEGRADATION/ FAILURE, COMPUTER OUTAGE	SYSTEM STATUS DATA DISPLAY	N/A	L	H
A1.6.10.2	DETECT FAILURE TO UPDATE FLIGHT PLAN DATA BASE	R/A	FLIGHT PLAN DATA BASE NOT UPDATING	FLIGHT DATA DISPLAY	N/A	L	H
A1.6.10.3	ENTER DISPLAY AMENDMENT MESSAGE ON CONSOLE	E	N/A	N/A	FLIGHT ID, FIELD TO BE MODIFIED, NEW DATA, FLIGHT DATA AMENDMENT	L	H
A1.6.10.4	ENTER FLIGHT PLAN ON CONSOLE	E	N/A	N/A	CALLSIGN, PLAN DATA, FLIGHT PLAN	L	H
A1.6.10.5	VERIFY FLIGHT PLAN DATA BASE TRANSITION ACTIVITIES	E/R/VC	FLIGHT DATA ENTRY, FULL DATA BLOCK, TRANSITION VERIFICATION	FLIGHT DATA DISPLAY, SITUATION DISPLAY, TEXTUAL ATC MAIL	TEXTUAL ATC MAIL	L	M
A1.6.11	RESPONDING TO TRANSIENT VSCS FAILURES						
A1.6.11.1	DETECT UNRELIABLE VSCS COMMUNICATION	A/VC	UNRELIABLE VSCS COMMUNICATION	DIRECT OBSERVATION	N/A	L	H
A1.6.11.2	QUERY WHETHER OTHERS ARE RECEIVING AN AIRCRAFT'S TRANSMISSIONS	E/VC	N/A	N/A	TEXTUAL ATC MAIL	L	H
A1.6.11.3	ISSUE ALTERNATE COMMUNICATION FOR AIR/GROUND TRANSMISSION	VC	N/A	N/A	N/A	L	H
A1.6.11.4	RECEIVE NOTICE OF TRANSIENT COMMUNICATION FAILURE	R/VC	TRANSIENT COMMUNICATION FAILURE	TEXTUAL ATC MAIL	N/A	L	M
A1.6.12	RESPONDING TO AIRSPACE RECONFIGURATIONS/ RESECTORIZATIONS						
A1.6.12.1	RECEIVE NOTICE TO TAKE OVER AIRSPACE	R/VC	TAKE OVER AIRSPACE	TEXTUAL ATC MAIL	N/A	L	H
A1.6.12.2	RECEIVE NOTICE TO PREPARE FOR SECTOR RECONFIGURATION	R/VC	FLIGHT DATA ENTRY, RESECTORIZATION SUPPORT FDE INDICATION, NOTICE TO PREPARE FOR RECONFIGURATION	FLIGHT DATA DISPLAY, TEXTUAL ATC MAIL	N/A	L	H
A1.6.12.3	RECEIVE NOTICE TO RELEASE AIRSPACE	R/VC	RELEASE AIRSPACE	TEXTUAL ATC MAIL	N/A	L	H
A1.6.12.4	RECEIVE NOTICE THAT ADJACENT FACILITY IS OPERATIVE	R/VC	ADJACENT FACILITY OPERATIVE	TEXTUAL ATC MAIL	N/A	L	H
A1.6.12.5	RECEIVE NOTICE THAT ADJACENT FACILITY IS INOPERATIVE	R/VC	ADJACENT FACILITY INOPERATIVE	TEXTUAL ATC MAIL	N/A	L	H
A1.6.12.6	ENTER RECONFIGURATION/ RESECTORIZATION ACCEPTANCE	E	N/A	N/A	ACCEPT RESECTORIZATION	L	M
A1.6.13	RESPONDING TO SENSOR OUTAGES						
A1.6.13.1	RECEIVE NOTICE OF RADAR SENSOR STATUS	R/VC	RADAR EQUIPMENT OUTAGE	TEXTUAL ATC MAIL	N/A	L	H
A1.6.13.2	RECEIVE PROCEDURES TO BE USED TO ACCOMMODATE SENSOR OUTAGE	R/VC	SENSOR OUTAGE PROCEDURES	TEXTUAL ATC MAIL	N/A	L	M

Task Information Requirements

Task Number	Task Statement	Task Type	Information Received	Information Source	Information Entered	Freq	Crit
A1.6.13.3	PERCEIVE TRACKING OR TRANSPONDER FAILURE	R/A	TRACK SWAP, FALSE RETURN, TRACK DISASSOCIATION, COAST INDICATOR, TRANSPONDER FAILURE NOTICE	SITUATION DISPLAY, FULL DATA BLOCK, POSITION SYMBOL	N/A	L	H
A1.6.13.4	FORWARD NOTICE OF RADAR SENSOR STATUS TO ANOTHER CONTROLLER/ SUPERVISOR	E/VC	N/A	N/A	TEXTUAL ATC MAIL	L	M

COGNITIVE/SENSORY ATTRIBUTES

This section provides a characterization of Extreme and High criticality tasks in terms of key cognitive and sensory human attributes involved in the performance of the tasks. These are the human abilities required to perform a task.

Fourteen cognitive and sensory attributes are relevant to the tasks inherent in Air Traffic Control. Definitions of each attribute and ATC examples of each attribute are provided in Section 3.4.2 (Table 3.4-1) of Volume I. The 14 attributes are grouped by type of task, as previously identified in the Task Information Requirements table of this appendix:

Associated With ENTRY (E) Tasks

- Coding

Associated With RECEIPT (R) Tasks

- Movement Detection
- Spatial Scanning
- Filtering
- Image/Pattern Recognition
- Decoding

Associated With ANALYTICAL (A) Tasks

- Visualization
- Short-Term Memory
- Long-Term Memory
- Deductive Reasoning
- Inductive Reasoning
- Mathematical/Probabilistic Reasoning
- Prioritizing

Associated With VERBAL COORDINATION (VC) Tasks

- Verbal Filtering

Analytical attributes predominate as key requirements of critical controller tasks, along with message filtering and decoding. The frequency of attribute association with the 157 critical tasks is as follows:

Coding	31 Tasks
Movement Detection	10 Tasks
Spatial Scanning	22 Tasks
Filtering	38 Tasks
Image/Pattern Recognition	17 Tasks
Decoding	55 Tasks

Visualization	37 Tasks
Short-Term Memory	31 Tasks
Long-Term Memory	9 Tasks
Deductive Reasoning	40 Tasks
Inductive Reasoning	23 Tasks
Mathematical/Probabilistic Reasoning	31 Tasks
Prioritizing	17 Tasks
Verbal Filtering	43 Tasks

Critical Task Cognitive/Sensory Attributes

| Task Number | Task Statement | Attributes | | |

Critical Task Cognitive/Sensory Attributes

| Task Number | Task Statement | Attributes | | |

Critical Task Cognitive/Sensory Attributes

| Task Number | Task Statement | Attributes | | |

Critical Task Cognitive/Sensory Attributes

| Task Number | Task Statement | Attributes | | |

Critical Task Cognitive/Sensory Attributes

| Task Number | Task Statement | Attributes | | |

Critical Task Cognitive/Sensory Attributes

| Task Number | Task Statement | Attributes | | |

PERFORMANCE REQUIREMENTS

The critical controller tasks identified in the Task Information Requirements require expeditious and accurate performance for effective control of aircraft. Particularly important performance characteristics for these tasks are identified in this section. An entry in the accompanying Task Performance Criteria table for a task indicates a performance criterion that is considered important to effective task accomplishment.

Different performance criteria apply to different task types. Refer to Section 3.4.3 (Table 3.4-2) of Volume I for the definitions and ATC examples of each performance criterion. The criteria that can apply to each task type are as follows:

Associated With ENTRY (E) Tasks

- Accuracy of Receipt
- Implementation Time

Associated With RECEIPT (R) Tasks

- Accuracy of Receipt
- Recognition Time

Associated With ANALYTICAL (A) Tasks

- Planning Time
- Accuracy of Time Estimates
- Accuracy of Spatial Estimates
- Accuracy of Probability Estimates
- Appropriateness of Action
- Appropriateness of Timing

Associated With VERBAL COORDINATION (VC) Tasks

- Implementation Time
- Accuracy of Communication

Accuracy of verbal communications is the predominant performance criterion for these critical tasks. Accuracy of information entry and receipt via workstation displays, along with recognition time for system information, also are frequently associated with these tasks. For analytical tasks, the predominant performance criteria are the accuracies of estimates of spatial matters, situation probabilities, and of time. The frequency of performance criteria association with the 157 critical tasks is as follows:

Accuracy of Entry	29 Tasks
Implementation Time	3 Tasks
Accuracy of Receipt	45 Tasks
Recognition Time	36 Tasks

Planning Time	11 Tasks
Accuracy of Time Estimates	23 Tasks
Accuracy of Spatial Estimates	31 Tasks
Accuracy of Probability Estimates	27 Tasks
Appropriateness of Action	10 Tasks
Appropriateness of Timing	13 Tasks
Implementation Time	7 Tasks
Accuracy of Communication	79 Tasks

Critical Task Performance Criteria

| Task Number | Task Statement | Criteria | | |

Critical Task Performance Criteria

| Task Number | Task Statement | Criteria | | |

Critical Task Performance Criteria

| Task Number | Task Statement | Criteria | | |

Critical Task Performance Criteria

| Task Number | Task Statement | Criteria | | |

Critical Task Performance Criteria

| Task Number | Task Statement | Criteria | | |

Critical Task Performance Criteria

| Task Number | Task Statement | Criteria | | |

This Page Intentionally Left Blank
(Pages D-43 thru D-70 deleted)

APPENDIX E

TASK ELEMENT STATEMENTS

The table presented in this appendix is actually a composite of sub-tables, each of which is devoted to the decomposition of a single controller task. Each sub-table contains an identifying Task Number, Task Statement (from Appendix B), Task Type (from Appendix D), Coordination Media (Appendix B), Task Frequency and Criticality (from Appendix D), and four columns of information:

1. Element Number
2. Task Element Statement
3. Object(s)
4. Number of Objects

Element Number is an expansion of the Task Number to reflect a logical ordering or likely sequence of the element steps. The element number is unique, although the contents of a given element may be found in more than one task. O (for "Or"), A (for "And"), or A/O (for "And/Or") between elements indicates the end of a sequence of elements comprising alternate modes of task completion. This convention is needed in particular to denote where two entirely different processes may be employed, as in communication tasks which may be performed either via ATC Mail or by voice over the Voice Switching and Control System (VSCS).

A **Task Element Statement** is presented in the structured form:

Verb – (modifier) – Object – (modifier) – (*descriptive information*)

Verb and Object portions are always present, the other portions being used as needed. Nomenclature for data objects follows the User Interface Language of Appendix C where possible. TAAS data objects are emphasized by underlines preceding and between words of the object name. An asterisk (*) preceding the Task Element verb indicates that the particular element may not always be performed.

Objects is a summation of the specific User Interface Language (Appendix C) data objects cited in the Task Element Statement. (NOTE: the User Interface Language should be referred to for specific data object details.)

Number of Objects projects how many instances or representations of each UIL data object a controller generally would deal with in performing the Task Element. Again, a generalized facility and time scenario is assumed. The numbers represent normal situations rather than worst-case scenarios or system limits.

The quantities of data objects assumed in certain specific situations frequently encountered in the Task Elements are as follows:

Full Data Blocks in the Terminal sector	15
Partial Data Blocks in the Terminal Sector	15
Limited Data Blocks in the Terminal Sector	5
Flight Data Entries in Flight Data Display	20
Traffic Management Advisories in ATC Mail	5
Sectors bounding terminal airspace	5
Obstructions on Situation Display geographic map	3
Weather Descriptors on Situation Display	2

For data objects other than those listed here, no general assumption is made. Quantity of objects is assigned on a case-by-case basis to represent a "normal" situation.

NOTE: Due to the extensive revision of the data in this Appendix, black lines (side bars) in the margins to indicate substantive changes (see Foreword) from the original volume have not been used.

TASK NUMBER / ELEMENT NUMBER	TASK STATEMENTS / DATA AND TASK ELEMENT STATEMENTS	OBJECTS	NO. OF OBJECTS
A1.1.1.1	REVIEW FLIGHT DATA DISPLAY FOR PRESENT AND/OR FUTURE AIRCRAFT SEPARATION		
	TASK TYPE: R/A COORD MEDIA: FREQUENCY: MED CRITICALITY: EXT		
A1.1.1.1.1	ACQUIRE _Flight_Data_Entry and _Time on _Flight_Data_Display for information pertaining to aircraft separation	Flight_Data_Entry Time Flight_Data_Display	20 1 1
A1.1.1.1.2	SYNTHESIZE aircraft, position, route, speed, altitude and time information into a mental picture of aircraft separation		
A1.1.1.1.3	RECOGNIZE aircraft paths warranting further close monitoring and evaluation		
A1.1.1.2	REVIEW SITUATION DISPLAY FOR POTENTIAL VIOLATION OF AIRCRAFT SEPARATION STANDARDS		
	TASK TYPE: R/A COORD MEDIA: FREQUENCY: HI CRITICALITY: EXT		
A1.1.1.2.1	ACQUIRE _Position_Symbol, _Full_Data_Block, and _Background_Descriptor on _Situation_Display for potential separation violation	Position_Symbol Full_Data_Block Background_Descriptor Situation_Display	30 27 1 1
A1.1.1.2.2	SYNTHESIZE altitude, speed, time, range, and aircraft data into a mental traffic picture with regard to potential violation of aircraft separation standards		
A1.1.1.2.3	RECOGNIZE potential violation of aircraft separation standards		
A1.1.1.4	PROJECT MENTALLY AN AIRCRAFT'S FUTURE POSITION/ ALTITUDE/ PATH		
	TASK TYPE: R/A COORD MEDIA: FREQUENCY: HI CRITICALITY: HI		
A1.1.1.4.1	ACQUIRE _Situation_Display for _Position_Symbol, _Full_Data_Block, _Background_Descriptor, and _Graphic_ATC_Radar_Weather to project aircraft's future position A/O	Situation_Display Position_Symbol Full_Data_Block Background_Descriptor Graphic_ATC_Radar_Weather	1 1 1 1 1
A1.1.1.4.2	ACQUIRE _Flight_Data_Entry, and _Time on _Flight_Data_Display *aircraft flight progress*	Flight_Data_Entry Time Flight_Data_Display	20 1 1
A1.1.1.4.3	SYNTHESIZE time, location, route, speed, and altitude, on specified aircraft into a mental picture of future position, altitude, or path		
A1.1.1.4.4	PROJECT future location, altitude and/ or path of aircraft, possibly with regard to proximity to other aircraft, obstructions, special use airspace, and weather		
A1.1.1.6	FORCE/ QUICK LOOK FULL DATA BLOCK(S) TO EXAMINE TRACK INFORMATION ON AIRCRAFT		
	TASK TYPE: E/R/A COORD MEDIA: FREQUENCY: LOW CRITICALITY: MED		
A1.1.1.6.1	INITIATE _Quick_Look message *to force radar data from adjacent airspace to situation display*	Quick_Look	1

TASK NUMBER / ELEMENT NUMBER	TASK STATEMENTS / DATA AND TASK ELEMENT STATEMENTS	OBJECTS	NO. OF OBJECTS
A1.1.1.6	FORCE/ QUICK LOOK FULL DATA BLOCK(S) TO EXAMINE TRACK INFORMATION ON AIRCRAFT		
	TASK TYPE: E/R/A COORD MEDIA: FREQUENCY: LOW CRITICALITY: MED (Continued)		
A1.1.1.6.2	EXECUTE _Quick_Look message	Quick_Look	1
A1.1.1.6.3	DETECT _Full_Data_Block *quick look* on _Situation_Display from another sector	Full_Data_Block Situation_Display	27 1
	O		
A1.1.1.6.4	INITIATE _Force_Data_Block message *to force full data block from adjacent airspace onto situation display*	Force_Data_Block	1
A1.1.1.6.5	EXECUTE _Force_Data_Block message	Force_Data_Block	1
A1.1.1.6.6	EXTRACT track information from forced _Full_Data_Block on _Situation_Display	Full_Data_Block Situation_Display	1 1
A1.1.1.7	DETERMINE WHETHER AIRCRAFT MAY BE SEPARATED BY LESS THAN PRESCRIBED MINIMA		
	TASK TYPE: A COORD MEDIA: FREQUENCY: HI CRITICALITY: EXT		
A1.1.1.7.1	EVALUATE current and projected mental traffic picture to determine potential situations of less than standard separation		
A1.1.1.7.2	DECIDE whether aircraft separation is or will be less than minimum		
A1.1.1.8	SELECT FDE SORTING PRIORITY SCHEME		
	TASK TYPE: E COORD MEDIA: FREQUENCY: LOW CRITICALITY: LOW		
A1.1.1.8.1	INITIATE _Select_FDE_Sort_Technique message *to order flight data entry on flight data display*	Select_FDE_Sort_Technique	1
A1.1.1.8.2	EXECUTE _Select_FDE_Sort_Technique message	Select_FDE_Sort_Technique	1
A1.1.1.8.3	DETECT posting of _Flight_Data_Entry in desired order on _Flight_Data_Display	Flight_Data_Entry Flight_Data_Display	27 1
A1.1.1.9	OBSERVE TRACK VELOCITY/ DISTANCE VECTOR TO PROJECT AIRCRAFT MOVEMENT		
	TASK TYPE: E/R/A COORD MEDIA: FREQUENCY: MED CRITICALITY: MED		
A1.1.1.9.1	INITIATE _Request_Track_Velocity_Vector message for desired aircraft	Request_Track_Velocity_Vector	1
A1.1.1.9.2	EXECUTE _Request_Track_Velocity_Vector message	Request_Track_Velocity_Vector	1
	O		
A1.1.1.9.3	INITIATE _Request_Track_Distance_Vector message for desired aircraft	Request_Track_Distance_Vector	1
A1.1.1.9.4	EXECUTE _Request_Track_Distance_Vector message	Request_Track_Distance_Vector	1
A1.1.1.9.5	DETECT _Track_Velocity_Vector or _Track_Distance_Vector and _Vector_Type_Indicator from _Situation_Display *results of track velocity/ distance vector message*	Track_Velocity_Vector Track_Distance_Vector Vector_Type_Indicator Situation_Display	27 27 1 1

TASK NUMBER / ELEMENT NUMBER	TASK STATEMENTS / DATA AND TASK ELEMENT STATEMENTS	OBJECTS	NO. OF OBJECTS
A1.1.1.9	OBSERVE TRACK VELOCITY/ DISTANCE VECTOR TO PROJECT AIRCRAFT MOVEMENT		
	TASK TYPE: E/R/A COORD MEDIA: FREQUENCY: MED CRITICALITY: MED (Continued)		
A1.1.1.9.6	EXTRACT track velocity or distance information on an aircraft from _Track_Velocity_Vector or _Track_Distance_Vector on _Situation_Display	Track_Velocity_Vector Track_Distance_Vector Situation_Display	1 1 1
A1.1.1.12	REVIEW SITUATION DISPLAY FOR POTENTIAL VIOLATION OF AIRSPACE SEPARATION STANDARDS		
	TASK TYPE: R/A COORD MEDIA: FREQUENCY: HI CRITICALITY: EXT		
A1.1.1.12.1	ACQUIRE _Position_Symbol, _Full_Data_Block, _Graphic_ATC_Radar_Wx, and _Background_Descriptor on _Situation_Display for information pertaining to a potential airspace conflict	Position_Symbol Full_Data_Block Graphic_ATC_Radar_Wx Background_Descriptor Situation_Display	30 27 1 1 1
A1.1.1.12.2	SYNTHESIZE altitude, route, weather, special use airspace, and time information into a mental traffic picture with regard to violation of airspace separation standards		
A1.1.1.12.3	RECOGNIZE potential violation of airspace separation standards, and potential airspace conflict		
A1.1.1.14	REVIEW SITUATION DISPLAY FOR POTENTIAL VIOLATION OF CONFORMANCE CRITERIA		
	TASK TYPE: R/A COORD MEDIA: FREQUENCY: HI CRITICALITY: MED		
A1.1.1.14.1	ACQUIRE _Position_Symbol, _Data_Block, and _Geographic_Map_Data on _Situation_Display for information on potential violation of altitude and lateral conformance A/O	Position_Symbol Data_Block Geographic_Map_Data Situation_Display	30 27 1 1
A1.1.1.14.2	ACQUIRE _Flight_Data_Entry, and _Time on _Flight_Data_Display for information pertaining to potential violation of conformance criteria	Flight_Data_Entry Time Flight_Data_Display	20 1 1
A1.1.1.14.3	SYNTHESIZE altitude, route, aircraft, speed, nonconformance indicator and time information into a mental traffic picture with regard to potential violation of conformance criteria		
A1.1.1.14.4	RECOGNIZE potential violation of altitude, speed, or route conformance criteria		
A1.1.1.15	DETERMINE WHETHER AIRSPACE SEPARATION STANDARDS MAY BE VIOLATED		
	TASK TYPE: A COORD MEDIA: FREQUENCY: HI CRITICALITY: EXT		
A1.1.1.15.1	DECIDE by mentally projecting the traffic picture if the potential exists for less than standard separation between an aircraft and Special Use Airspace		

TASK NUMBER / ELEMENT NUMBER	TASK STATEMENTS / DATA AND TASK ELEMENT STATEMENTS	OBJECTS	NO. OF OBJECTS
A1.1.1.17	DETERMINE WHETHER FLOW RESTRICTIONS MAY BE VIOLATED		
	TASK TYPE: A COORD MEDIA: FREQUENCY: HI CRITICALITY: HI		
A1.1.1.17.1	DECIDE by projecting the traffic picture mentally, if the potential exists for instances of non-compliance with flow control restrictions		
A1.1.1.75	REVIEW DISPLAYS FOR POTENTIAL VIOLATION OF FLOW RESTRICTIONS		
	TASK TYPE: R/A COORD MEDIA: FREQUENCY: HI CRITICALITY: EXT		
A1.1.1.75.1	ACQUIRE _Full_Data_Block, and _Position_Symbol on _Situation_Display for information pertaining to potential violation of flow restrictions	Full_Data_Block Position_Symbol Situation_Display	27 30 1
	A/O		
A1.1.1.75.2	ACQUIRE _Flight_Data_Entry, and _Time on _Flight_Data_Display for information pertaining to potential violation of flow restrictions	Flight_Data_Entry Time Flight_Data_Display	20 1 1
	A/O		
A1.1.1.75.3	ACQUIRE Traffic Management Record (non-computer source) for traffic management information		
A1.1.1.75.4	SYNTHESIZE mental traffic picture with regard to flow violations from aircraft, position, altitude, route, speed, time and traffic management information		
A1.1.1.75.5	RECOGNIZE potential violation of flow restrictions		
A1.1.1.76	REQUEST BEACON CODE/ MODE C/ GROUND SPEED READOUT OF UNASSOCIATED TARGET		
	TASK TYPE: E/R/A COORD MEDIA: FREQUENCY: LOW CRITICALITY: MED		
A1.1.1.76.1	INITIATE _Query_Data_Base_For_Selected_Readout message	Query_Data_Base_For_Selected_Readout	1
A1.1.1.76.2	EXECUTE _Query_Data_Base_For_Selected_Readout message	Query_Data_Base_For_Selected_Readout	1
A1.1.1.76.3	DETECT _Mode_3/A_Beacon_Code, _Mode_C_Altitude, _Ground_Speed in appropriate _Limited_Data_Block	Mode_3/A_Beacon_Code Mode_C_Altitude Ground_Speed Limited_Data_Block	1 1 1 1
A1.1.2.1	OBSERVE DISPLAY OF NEW/ CHANGED EQUIPMENT/ OPERATIONAL STATUS		
	TASK TYPE: R/A COORD MEDIA: FREQUENCY: LOW CRITICALITY: MED		
A1.1.2.1.1	SCAN _System_Status_Data_Display for new or revised equipment/ operational changes	System_Status_Data_Display	1
A1.1.2.1.2	DETECT _Update_Indication *data emphasis* on _System_Status_Data_Display	Update_Indication System_Status_Data_Display	1 1
A1.1.2.1.3	EXTRACT new or changed equipment/ operational status from _System_Status_Data_Display	System_Status_Data_Display	1

Task Element Report

TASK NUMBER / ELEMENT NUMBER	TASK STATEMENTS / DATA AND TASK ELEMENT STATEMENTS	OBJECTS	NO. OF OBJECTS
A1.1.2.2	ENTER SYSTEM STATUS DATA CHANGE		
	TASK TYPE: E COORD MEDIA: FREQUENCY: LOW CRITICALITY: MED		
A1.1.2.2.1	INITIATE _System_Status_Data_Change message for entry of a change in system status	System_Status_Data_Change	1
A1.1.2.2.2	EXECUTE _System_Status_Data_Change message	System_Status_Data_Change	1
A1.1.2.2.3	DETECT acceptance of data entered by _System_Status_Data_Change message	System_Status_Data_Change	1
A1.1.2.3	RECEIVE NOTICE OF STATUS OF ADJACENT/ BACKUP FACILITY AUTOMATION EQUIPMENT		
	TASK TYPE: R/VC COORD MEDIA: V/M FREQUENCY: LOW CRITICALITY: LOW		
A1.1.2.3.1	PERFORM TEM M.1, Receiving ATC Mail *notice of backup ACF interruption/restoration*		
	O		
A1.1.2.3.2	PERFORM VSCS, Receiving G/G Communications *notice of ACF equipment interruption/restoration*		
A1.1.2.4	DETECT EQUIPMENT SERVICE INTERRUPTION/ RESTORATION		
	TASK TYPE: R COORD MEDIA: FREQUENCY: LOW CRITICALITY: MED		
A1.1.2.4.1	SEARCH system displays for signs of system interruption/ restroration		
A1.1.2.4.2	DETECT partial/ complete loss of system display(s)		
	O		
A1.1.2.4.3	DETECT failure of _Time, _Full_Data_Block, _Target/Track_Descript or, and/ or _Flight_Data_Entry on _Flight_Data_Display or _Situation_Display to properly update	Time Full_Data_Block Target/Track_Descriptor Flight_Data_Entry Flight_Data_Display Situation_Display	1 27 27 27 1 1
A1.1.2.4.4	DETECT improper/ no response to controller input action on system display(s)		
	A/O		
A1.1.2.4.5	DETECT restoration of system display(s)		
A1.1.2.4.6	DETECT proper updating of _Time, _Full_Data_Block, _Target/Track_Descript or, _Flight_Data_Entry on _Situation_Display and/ or _Flight_Data_Display	Time Full_Data_Block Target /Track_Descriptor Flight_Data_Entry Situation_Display Flight_Data_Display	1 27 27 27 1 1
	O		
A1.1.2.4.7	DETECT proper response to controller input action on system displays		
A1.1.2.5	RECEIVE NOTICE OF COMMUNICATION STATUS		
	TASK TYPE: R/VC COORD MEDIA: V/M FREQUENCY: LOW CRITICALITY: MED		
A1.1.2.5.1	PERFORM TEM M.1, Receiving ATC Mail *notice of communications status*		
	O		

TASK NUMBER / ELEMENT NUMBER	TASK STATEMENTS / DATA AND TASK ELEMENT STATEMENTS	OBJECTS	NO. OF OBJECTS
A1.1.2.5	RECEIVE NOTICE OF COMMUNICATION STATUS		
	TASK TYPE: R/VC COORD MEDIA: V/M FREQUENCY: LOW CRITICALITY: MED (Continued)		
A1.1.2.5.2	PERFORM VSCS, Receiving G/G Communications *notice ofcommunications status*		
A1.1.2.6	REQUEST REPORT ON NAVAID STATUS		
	TASK TYPE: VC COORD MEDIA: V FREQUENCY: LOW CRITICALITY: MED		
A1.1.2.6.1	PERFORM VSCS, Communicating Normally Air-To-Ground *request and receive pilot report on NAVAID status* A/O		
A1.1.2.6.2	PERFORM VSCS, Initiating G/G Communications *request NAVAID status from Flight Service Station*		
A1.1.2.6.3	PERFORM VSCS, Receiving G/G Communications *receive NAVAID status from Flight Service Station*		
A1.1.2.75	DETECT AIRPORT ENVIRONMENTAL EQUIPMENT SERVICE INTERRUPTION/ RESTORATION ALERT		
	TASK TYPE: R COORD MEDIA: FREQUENCY: LOW CRITICALITY: MED		
A1.1.2.75.1	SEARCH _System_Status_Data_Display for information on status of equipment	System_Status_Data_Display	1
A1.1.2.75.2	DETECT presence of Emphasized Information on the _System_Status_Data_Display *indicating a change in equipment status*	System_Status_Data_Display	1
A1.1.2.76	ACKNOWLEDGE AIRPORT ENVIRONMENTAL EQUIPMENT SERVICE OPERATIONAL STATUS ALERT		
	TASK TYPE: E COORD MEDIA: FREQUENCY: LOW CRITICALITY: MED		
A1.1.2.76.1	INITIATE _Deemphasize_System_Status_Data_Item message	Deemphasize_System_Status_Data_Item	1
A1.1.2.76.2	EXECUTE _Deemphasize_System_Status_Data_Item message	Deemphasize_System_Status_Data_Item	1
A1.1.2.76.3	DETECT proper response to _Deemphasize_System_Status_Data_Item message	Deemphasize_System_Status_Data_Item	1
A1.1.3.1	SEARCH DISPLAY FOR INACTIVE FLIGHT PLAN ON CLEARANCE REQUEST		
	TASK TYPE: R/A COORD MEDIA: FREQUENCY: LOW CRITICALITY: LOW		
A1.1.3.1.1	SEARCH _Flight_Data_Entry on _Flight_Data_Display for _Callsign or _Computer_Identification of aircraft requesting clearance	Flight_Data_Entry Flight_Data_Display Callsign Computer_Identification	1 1 1 1
A1.1.3.1.2	EXTRACT _Callsign, _Computer_ID, _Status_Indicator *proposed or active*, _Control_Information_Symbol *FDEN* and _Beacon_Code from _Flight_Data_Entry on Flight Data Display	Callsign Computer_ID Status_Indicator Control_Information_Symbol Beacon_Code Flight_Data_Entry	1 1 1 1 1 1

TASK NUMBER / ELEMENT NUMBER	TASK STATEMENTS / DATA AND TASK ELEMENT STATEMENTS	OBJECTS	NO. OF OBJECTS
A1.1.3.1	SEARCH DISPLAY FOR INACTIVE FLIGHT PLAN ON CLEARANCE REQUEST		
	TASK TYPE: R/A COORD MEDIA: FREQUENCY: LOW CRITICALITY: LOW (Continued)		
A1.1.3.1.3	COMPARE _Callsign, _Status_Indicator, and _Control_Information_Symbol *FDEN* for agreement regarding proposed clearance request	Callsign Status_Indicator Control_Information_Symbol	1 1 1
A1.1.3.2	REQUEST FLIGHT DATA READOUT		
	TASK TYPE: E/R/A COORD MEDIA: FREQUENCY: LOW CRITICALITY: MED		
A1.1.3.2.1	INITIATE _Request_Flight_Data_Readout Message for additional (full) route information on an aircraft	Request_Flight_Data_Readout	1
A1.1.3.2.2	EXECUTE _Request_Flight_Data_Readout Message	Request_Flight_Data_Readout	1
A1.1.3.2.3	DETECT appearance of full flight plan in _Flight_Data_Readout_Area of _Flight_Data_Display *results of request flight data readout message*	Flight_Data_Readout_Area Flight_Data_Display	1 1
A1.1.3.2.4	EXTRACT flight plan information from _Flight_Data_Readout_Area on _Flight_Data_Display	Flight_Data_Readout_Area Flight_Data_Display	1 1
A1.1.3.3	REQUEST FLIGHT DATA ENTRY FORMAT CHANGE		
	TASK TYPE: E COORD MEDIA: FREQUENCY: LOW CRITICALITY: MED		
A1.1.3.3.1	INITIATE _Select_Flight_Data_Entry_Form at message for aircraft or all FDE	Select_Flight_Data_Entry_Format	1
A1.1.3.3.2	EXECUTE _Select_Flight_Data_Entry_Forma t message	Select_Flight_Data_Entry_Format	1
A1.1.3.3.3	DETECT system acceptance of _Select_Flight_Data_Entry_Format message	Select_Flight_Data_Entry_Format	1
A1.1.4.1	ENTER DEPARTURE/ EN ROUTE TIME MESSAGE		
	TASK TYPE: C COORD MEDIA: FREQUENCY: LOW CRITICALITY: MED		
A1.1.4.1.1	INITIATE _Departure message *manually enter departure time into flight data base*	Departure	1
A1.1.4.1.2	EXECUTE _Departure message	Departure	1
A1.1.4.1.3	DETECT _Actual_Departure_Time in appropriate _Flight_Data_Entry *result of departure message*	Actual_Departure_Time Flight_Data_Entry	1 1
A1.1.4.1.4	INITIATE _Progress_Report message	Progress_Report	1
A1.1.4.1.5	EXECUTE _Progress_Report message	Progress_Report	1
A1.1.4.1.6	DETECT appropriate change in _Time_At_Previous_Posted_Fix, _CTA_At_Posted_Fix in aircraft's _Flight_Data_Entry	Time_At_Previous_Posted_Fix CTA_At_Posted_Fix Flight_Data_Entry	1 1 1
A1.1.4.2	INITIATE TRACK MANUALLY		
	TASK TYPE: E/R COORD MEDIA: FREQUENCY: LOW CRITICALITY: HI		
A1.1.4.2.1	INITIATE _Track message *start*	Track	1

TASK NUMBER / ELEMENT NUMBER	TASK STATEMENTS / DATA AND TASK ELEMENT STATEMENTS	OBJECTS	NO. OF OBJECTS
A1.1.4.2	INITIATE TRACK MANUALLY		
	TASK TYPE: E/R COORD MEDIA: FREQUENCY: LOW CRITICALITY: HI (Continued)		
A1.1.4.2.2	EXECUTE _Track message	Track	1
A1.1.4.2.3	DETECT _Track_Position_Symbol and _Full_Data_Block on the _Situation_Display *results of track start message*	Track_Position_Symbol Full_Data_Block Situation_Display	1 1 1
A1.1.4.3	OBSERVE AUTOMATIC TRACK START		
	TASK TYPE: R COORD MEDIA: FREQUENCY: MED CRITICALITY: HI		
A1.1.4.3.1	SCAN _Situation_Display for automatic track start	Situation_Display	1
A1.1.4.3.2	DETECT _Full_Data_Block *correlated with target*	Full_Data_Block	1
A1.1.4.4	RECEIVE DEPARTURE/ EN ROUTE TIME NOTICE		
	TASK TYPE: R/VC COORD MEDIA: V/M FREQUENCY: LOW CRITICALITY: HI		
A1.1.4.4.1	PERFORM VSCS, Receiving G/G Communications *notice of departure/ en route time from a controller, FSS, or ATCT*		
	O		
A1.1.4.4.2	PERFORM TEM M.1, Receiving ATC Mail *notice of departure/en route time*		
	O		
A1.1.4.4.3	PERFORM VSCS, Communicating Normally Air-To-Ground *notice fr m pilot of departure time or progress report*		
A1.1.4.75	ACKNOWLEDGE EMPHASIZED DEPARTURE MESSAGE		
	TASK TYPE: E COORD MEDIA: FREQUENCY: LOW CRITICALITY: LOW		
A1.1.4.75.1	INITIATE _Deemphasize_Emphasized_Displa y_Item message	Deemphasize_Emphasized_Display_Item	1
A1.1.4.75.2	EXECUTE _Deemphasize_Emphasized_Display _Item message	Deemphasize_Emphasized_Display_Item	1
A1.1.4.75.3	RECOGNIZE disappearance of emphasis of _Departure_Message on _Message_Composition_And_Response_Displa	Departure_Message Message_Composition_And_Response_Display	1 1
A1.1.4.76	OBSERVE EMPHASIZED DEPARTURE MESSAGE		
	TASK TYPE: R/A COORD MEDIA: FREQUENCY: LOW CRITICALITY: MED		
A1.1.4.76.1	SCAN _Message_Composition_And_Response_ Display for presence of departure message	Message_Composition_And_Response_Display	1
A1.1.4.76.2	DETECT _Departure_Message in _Message_Composition_And_Response_Displa	Departure_Message Message_Composition_And_Response_Display	1 1
A1.1.4.76.3	EXTRACT _Departure_Message from _Message_Composition_And_Response_Displa	Departure_Message Message_Composition_And_Response_Display	1 1
A1.1.5.1	EVALUATE CONDITIONS FOR PROVIDING FLIGHT FOLLOWING		
	TASK TYPE: R/A COORD MEDIA: FREQUENCY: LOW CRITICALITY: MED		
A1.1.5.1.1	ACQUIRE _Position_Symbol, _Full_Data_Block, _Weather_Descriptor on the _Situation_Display for information pertaing to workload and capability to provide flight following	Position_Symbol Full_Data_Block Weather_Descriptor Situation_Display	30 27 2 1
	A/O		

TASK NUMBER / ELEMENT NUMBER	TASK STATEMENTS / DATA AND TASK ELEMENT STATEMENTS	OBJECTS	NO. OF OBJECTS
A1.1.5.1	EVALUATE CONDITIONS FOR PROVIDING FLIGHT FOLLOWING		
	TASK TYPE: R/A COORD MEDIA: FREQUENCY: LOW CRITICALITY: MED (Continued)		
A1.1.5.1.2	ACQUIRE 20_Flight_Data_Entry, and _Time on _Flight_Data_Display for information pertaining to workload and capability to provide flight following	Flight_Data_Entry Time Flight_Data_Display	1 1 1
A1.1.5.1.3	SYNTHESIZE mental traffic picture of current and expected workload using aircraft, altitude, route, time and weather information		
A1.1.5.1.4	DECIDE feasibility of providing flight following service		
A1.1.5.2	RECEIVE REQUEST FOR FLIGHT FOLLOWING		
	TASK TYPE: R/VC COORD MEDIA: V/M FREQUENCY: LOW CRITICALITY: LOW		
A1.1.5.2.1	PERFORM TEM M.1, Receiving ATC Mail *flight following request from another controller*		
	O		
A1.1.5.2.2	PERFORM VSCS, Receiving G/G Communications *request from another controller or from Flight Service Station for flight following service*		
	O		
A1.1.5.2.3	PERFORM VSCS, Communicating Normally Air-To-Ground *receive a request for flight following from a pilot*		
	O		
A1.1.5.2.4	SCAN _Full_Data_Block on _Situation_Display for presence of handoff alert indicator	Full_Data_Block Situation_Display	15 1
A1.1.5.2.5	DETECT _Handoff_Alert_Indicator in _Full_Data_Block on Situation Display *another controller attempting to handoff an aircraft requesting flight following services*	Handoff_Alert_Indicator Full_Data_Block	1 1
A1.1.5.3	DENY FLIGHT FOLLOWING REQUEST		
	TASK TYPE: E/VC COORD MEDIA: V/M FREQUENCY: LOW CRITICALITY: LOW		
A1.1.5.3.1	PERFORM TEM M.2, Sending ATC Mail *deny flight following service*		
	O		
A1.1.5.3.2	PERFORM VSCS, Initiating G/G Communications *denial of flight following service to another controller or flight service station*		
	O		
A1.1.5.3.3	PERFORM VSCS, Communicating Normally Air-To-Ground *advising a pilot unable to provide flight following service*		
A1.1.5.4	REQUEST/ ASSIGN BEACON CODE TO AIRCRAFT		
	TASK TYPE: E/R/VC COORD MEDIA: V FREQUENCY: MED CRITICALITY: MED		
A1.1.5.4.1	INITIATE _Discrete_Code_Request message for aircraft desiring flight following	Discrete_Code_Request	1

Task Element Report

TASK NUMBER / ELEMENT NUMBER	TASK STATEMENTS / DATA AND TASK ELEMENT STATEMENTS	OBJECTS	NO. OF OBJECTS
A1.1.5.4	REQUEST/ ASSIGN BEACON CODE TO AIRCRAFT		
	TASK TYPE: E/R/VC COORD MEDIA: V FREQUENCY: MED CRITICALITY: MED (Continued)		
A1.1.5.4.2	EXECUTE _Discrete_Code_Request message	Discrete_Code_Request	1
A1.1.5.4.3	PERFORM VSCS, Communicating Normally Air-To-Ground *transponder beacon code*		
A1.1.5.4.4	DETECT appearance of _Full_Data_Block on _Situation_Display or _Ident_Indicator in _Target_Position_Symbol	Full_Data_Block Situation_Display Ident_Indicator Target_Position_Symbol	1 1 1 1
A1.1.5.5	INFORM PILOT OF ALTERNATE INSTRUCTIONS NECESSARY FOR FLIGHT FOLLOWING SERVICE		
	TASK TYPE: VC COORD MEDIA: V FREQUENCY: LOW CRITICALITY: MED		
A1.1.5.5.1	PERFORM VSCS, Communicating Normally Air-To-Ground *advise pilot of alternate instructions to enhance conditions for flight following*		
A1.1.6.1	OFFSET A DATA BLOCK		
	TASK TYPE: E COORD MEDIA: FREQUENCY: LOW CRITICALITY: MED		
A1.1.6.1.1	INITIATE _Manually_Offset_Data_Block message to relocate data block	Manually_Offset_Data_Block	1
A1.1.6.1.2	EXECUTE _Manually_Offset_Data_Block message	Manually_Offset_Data_Block	1
A1.1.6.1.3	DETECT repositioned _Data_Block on the _Situation_Display *result of manually offset data block message*	Data_Block Situation_Display	1 1
A1.1.6.2	UPDATE/ REVISE CONTROLLER NOTE		
	TASK TYPE: E COORD MEDIA: FREQUENCY: LOW CRITICALITY: LOW		
A1.1.6.2.1	INITIATE _Controller_Note message	Controller_Note	1
A1.1.6.2.2	EXECUTE _Controller_Note message	Controller_Note	1
A1.1.6.2.3	DETECT _Controller_Note message results on the _Controller_Notepad_Display	Controller_Note Controller_Notepad_Display	1 1
A1.1.6.3	DELETE FLIGHT DATA ENTRY AND FULL DATA BLOCK FROM ATC SYSTEM		
	TASK TYPE: E COORD MEDIA: FREQUENCY: LOW CRITICALITY: LOW		
A1.1.6.3.1	INITIATE _Drop_Flight_Plan message	Drop_Flight_Plan	1
A1.1.6.3.2	EXECUTE _Drop_Flight_Plan message	Drop_Flight_Plan	1
A1.1.6.3.3	RECOGNIZE the removal of appropriate _Full_Data_Block from _Situation_Display and the removal of appropriate _Flight_Data_Entry from the _Flight_Data_Display	Full_Data_Block Situation_Display Flight_Data_Entry Flight_Data_Display	1 1 1 1
A1.1.6.5	SUPPRESS DISPLAY OF FLIGHT DATA ENTRY AND FULL DATA BLOCK FROM ALL DISPLAYS IN OWN SECTOR SUITE		
	TASK TYPE: E COORD MEDIA: FREQUENCY: LOW CRITICALITY: LOW		
A1.1.6.5.1	INITIATE _Suppress_Full_Data_Block_And_ Flight_Data_Entry message	Suppress_Full_Data_Block_And_Flight_Data_Entr	1

TASK NUMBER / ELEMENT NUMBER	TASK STATEMENTS / DATA AND TASK ELEMENT STATEMENTS	OBJECTS	NO. OF OBJECTS
A1.1.6.5	SUPPRESS DISPLAY OF FLIGHT DATA ENTRY AND FULL DATA BLOCK FROM ALL DISPLAYS IN OWN SECTOR SUITE		
	TASK TYPE: E COORD MEDIA: FREQUENCY: LOW CRITICALITY: LOW (Continued)		
A1.1.6.5.2	INDICATE _Flight_Identification to the _Suppress_Full_Data_Block_And_Flight_Dat a_Entry message	Flight_Identification Suppress_Full_Data_Block_And_Flight_Data_Entr	1 1
A1.1.6.5.3	EXECUTE _Suppress_Full_Data_Block_And_F light_Data_Entry message	Suppress_Full_Data_Block_And_Flight_Data_Entr	1
A1.1.6.5.4	RECOGNIZE suppression of appropriate _Full_Data_Block on the _Situation_Display and the removal of the _Flight_Data_Entry from the _Flight_Data_Display	Full_Data_Block Situation_Display Flight_Data_Entry Flight_Data_Display	1 1 1 1
A1.1.6.6	RESTORE DISPLAY OF FLIGHT DATA ENTRY AND FULL DATA BLOCK TO ALL DISPLAYS ON OWN SECTOR SUITE		
	TASK TYPE: E COORD MEDIA: FREQUENCY: LOW CRITICALITY: MED		
A1.1.6.6.1	INITIATE _Restore_Full_Data_Block_And_F light_Data_Entry message	Restore_Full_Data_Block_And_Flight_Data_Entry	1
A1.1.6.6.2	EXECUTE _Restore_Full_Data_Block_And_Fl ight_Data_Entry message	Restore_Full_Data_Block_And_Flight_Data_Entry	1
A1.1.6.6.3	DETECT appearance of _Full_Data_Block on the _Situation_Display or _Flight_Data_Entry on the _Flight_Data_Display	Full_Data_Block Situation_Display Flight_Data_Entry Flight_Data_Display	1 1 1 1
A1.1.6.7	SUPPRESS DATA BLOCK FROM ALL DISPLAYS IN OWN SECTOR SUITE		
	TASK TYPE: E COORD MEDIA: FREQUENCY: LOW CRITICALITY: LOW		
A1.1.6.7.1	INITIATE _Suppress_Full_Data_Block message for removal of Full Data Block from sector suite	Suppress_Full_Data_Block	1
A1.1.6.7.2	EXECUTE _Suppress_Full_Data_Block message	Suppress_Full_Data_Block	1
A1.1.6.7.3	RECOGNIZE removal of appropriate _Full_Data_Block from the _Situation_Display in own sector suite	Full_Data_Block Situation_Display	1 1
A1.1.6.8	RESTORE DATA BLOCK TO ALL DISPLAYS IN OWN SECTOR SUITE		
	TASK TYPE: E COORD MEDIA: FREQUENCY: LOW CRITICALITY: MED		
A1.1.6.8.1	INITIATE _Display_Full_Data_Block message for display in own sector suite	Display_Full_Data_Block	1
A1.1.6.8.2	EXECUTE _Display_Full_Data_Block message	Display_Full_Data_Block	1
A1.1.6.8.3	DETECT appearance of _Full_Data_Block	Full_Data_Block	1
A1.1.6.9	SUPPRESS FLIGHT DATA ENTRY FROM ALL DISPLAYS IN OWN SECTOR SUITE		
	TASK TYPE: E COORD MEDIA: FREQUENCY: LOW CRITICALITY: LOW		
A1.1.6.9.1	INITIATE _Suppress_Display_Of_An_FDE message for own sector suite	Suppress_Display_Of_An_FDE	1

TASK NUMBER / ELEMENT NUMBER	TASK STATEMENTS / DATA AND TASK ELEMENT STATEMENTS	OBJECTS	NO. OF OBJECTS
A1.1.6.9	SUPPRESS FLIGHT DATA ENTRY FROM ALL DISPLAYS IN OWN SECTOR SUITE		
	TASK TYPE: E COORD MEDIA: FREQUENCY: LOW CRITICALITY: LOW (Continued)		
A1.1.6.9.2	EXECUTE _Suppress_Display_Of_An_FDE message	Suppress_Display_Of_An_FDE	1
A1.1.6.9.3	RECOGNIZE removal of appropriate _Flight_Data_Entry from _Flight_Data_Display	Flight_Data_Entry Flight_Data_Display	1 1
A1.1.6.10	RESTORE FLIGHT DATA ENTRY TO ALL DISPLAYS IN OWN SECTOR SUITE		
	TASK TYPE: E COORD MEDIA: FREQUENCY: LOW CRITICALITY: LOW		
A1.1.6.10.1	INITIATE _Request_Flight_Data_Entry message for own sector suite	Request_Flight_Data_Entry	1
A1.1.6.10.2	EXECUTE _Request_Flight_Data_Entry message	Request_Flight_Data_Entry	1
A1.1.6.10.3	DETECT appearance of _Flight_Data_Entry on _Flight_Data_Display *results of request flight data entry message*	Flight_Data_Entry Flight_Data_Display	1 1
A1 1.6.11	ENTER FDE NOTATIONS		
	TASK TYPE: E COORD MEDIA: FREQUENCY: HI CRITICALITY: LOW		
A1.1.6.11.1	INITIATE _Enter_FDE_Notation message to enter a flight data entry notation *FDEN*	Enter_FDE_Notation	1
A1.1.6.11.2	EXECUTE _Enter_FDE_Notation message	Enter_FDE_Notation	1
A1.1.6.11.3	DETECT appearance of _Flight_Data_Entry_Notation *FDEN* in appropriate field of _Flight_Data_Entry on Flight Data Display	Flight_Data_Entry_Notation Flight_Data_Entry	1 1
A1.1.6.12	DELETE FDE NOTATIONS		
	TASK TYPE: E COORD MEDIA: FREQUENCY: LOW CRITICALITY: MED		
A1.1.6.12.1	INITIATE _Delete_FDE_Notation message to delete a flight data entry notation *FDEN*	Delete_FDE_Notation	1
A1.1.6.12.2	EXECUTE _Delete_FDE_Notation message	Delete_FDE_Notation	1
A1.1.6.12.3	RECOGNIZE removal of _FDE_Notation from _Flight_Data_Entry on _Flight_Data_Display	FDE_Notation Flight_Data_Entry Flight_Data_Display	1 1 1
A1.1.6.13	RESEQUENCE FLIGHT DATA ENTRY MANUALLY		
	TASK TYPE: E COORD MEDIA: FREQUENCY: LOW CRITICALITY: LOW		
A1.1.6.13.1	INITIATE _Manually_Post/Order_FDE message to resequence flight data entry position on flight data display	Manually_Post/Order_FDE	1
A1.1.6.13.2	EXECUTE _Manually_Post/Order_FDE message	Manually_Post/Order_FDE	1
A1.1.6.13.3	DETECT new location of _Flight_Data_Entry on _Flight_Data_Display	Flight_Data_Entry Flight_Data_Display	1 1

TASK NUMBER / ELEMENT NUMBER	TASK STATEMENTS / DATA AND TASK ELEMENT STATEMENTS	OBJECTS	NO. OF OBJECTS
A1.1.6.14	DELETE CONTROLLER NOTE		
	TASK TYPE: E COORD MEDIA: FREQUENCY: LOW CRITICALITY: LOW		
A1.1.6.14.1	INITIATE _Controller_Note message to delete information from controller notepad display	Controller_Note	1
A1.1.6.14.2	EXECUTE _Controller_Note message *delete*	Controller_Note	1
A1.1.6.14.3	RECOGNIZE deletion of appropriate text on _Controller_Notepad_Display	Controller_Notepad_Display	1
A1.1.6.15	DELETE SCRATCH PAD DATA IN FULL DATA BLOCK		
	TASK TYPE: E COORD MEDIA: FREQUENCY: LOW CRITICALITY: LOW		
A1.1.6.15.1	INITIATE _Delete_Scratch_Pad_Data message	Delete_Scratch_Pad_Data	1
A1.1.6.15.2	EXECUTE _Delete_Scratch_Pad_Data message	Delete_Scratch_Pad_Data	1
A1.1.6.15.3	RECOGNIZE removal of _Scratch_Pad_Data from _Full_Data_Block	Scratch_Pad_Data Full_Data_Block	1 1
A1.1.6.52	REMOVE OBSOLETE PAPER RECORDS OR RECORDED DATA		
	TASK TYPE: E COORD MEDIA: FREQUENCY: MED CRITICALITY: LOW		
A1.1.6.52.1	DETECT paper records A/D		
A1.1.6.52.2	REMOVE paper records *deadwood*		
A1.1.6.75	DELETE FLIGHT DATA ENTRY AND FULL DATA BLOCK FROM LOCAL TAAS SYSTEM		
	TASK TYPE: E COORD MEDIA: FREQUENCY: LOW CRITICALITY: LOW		
A1.1.6.75.1	INITIATE _Drop_Flight_Plan_Internal message	Drop_Flight_Plan_Internal	1
A1.1.6.75.2	EXECUTE _Drop_Flight_Plan_Internal message	Drop_Flight_Plan_Internal	1
A1.1.6.75.3	RECOGNIZE removal of Full Data Block from Situation Display and removal of Flight Data Entry from Flight Data Display		
A1.2.1.1	DETECT AIRCRAFT CONFLICT ALERT INDICATION		
	TASK TYPE: R COORD MEDIA: FREQUENCY: LOW CRITICALITY: EXT		
A1.2.1.1.1	SEARCH _Alert_And_Resolution_Display for presence of alerts	Alert_And_Resolution_Display	1
A1.2.1.1.2	DETECT _Conflict_Alert forced on the _Alert_And_Resolution_Display A/D	Conflict_Alert Alert_And_Resolution_Display	1 1
A1.2.1.1.3	SEARCH _Data_Block on _Situation_Display for presence of alerts	Data_Block Situation_Display	27 1

TASK NUMBER / ELEMENT NUMBER	TASK STATEMENTS / DATA AND TASK ELEMENT STATEMENTS	OBJECTS	NO. OF OBJECTS
A1.2.1.1	DETECT AIRCRAFT CONFLICT ALERT INDICATION		
	TASK TYPE: R COORD MEDIA: FREQUENCY: LOW CRITICALITY: EXT (Continued)		
A1.2.1.1.4	DETECT _Conflict_Alert_Indicator in _Full_Data_Block forced on the Situation Display	Conflict_Alert_Indicator Full_Data_Block	1 2
	A/O		
A1.2.1.1.5	SEARCH _Flight_Data_Entry on _Flight_Data_Display for presence of alert FDENs	Flight_Data_Entry Flight_Data_Display	20 1
A1.2.1.1.6	DETECT _Conflict_Alert *FDEN* in _Flight_Data_Entry on Flight Data Display	Conflict_Alert Flight_Data_Entry	1 2
A1.2.1.2	DETERMINE VALIDITY OF POTENTIAL AIRCRAFT CONFLICT NOTICE OR INDICATION		
	TASK TYPE: A COORD MEDIA: FREQUENCY: LOW CRITICALITY: HI		
A1.2.1.2.1	ACQUIRE _Position_Symbol, _Full_Data_Block and _Time on _Situation_Display for information to validate the aircraft conflict indication or notice	Position_Symbol Full_Data_Block Time Situation_Display	30 27 1 1
	A/O		
A1.2.1.2.2	ACQUIRE _Flight_Data_Entry, _Time on _Flight_Data_Display for information to validate the aircraft conflict indication or notice	Flight_Data_Entry Time Flight_Data_Display	20 1 1
A1.2.1.2.3	INTEGRATE speed, altitude, conflict alert, route and time information with regard to the current/ projected proximity of the two aircraft involved		
A1.2.1.2.4	COMPARE apparent situation with pilot intentions and/ or planned control actions		
A1.2.1.2.5	ASSESS validity of conflict alert(s) in consideration of the mental traffic picture		
A1.2.1.3	RECEIVE CONTROLLER NOTICE OF POTENTIAL AIRCRAFT CONFLICT IN SECTOR		
	TASK TYPE: VC COORD MEDIA: V FREQUENCY: LOW CRITICALITY: EXT		
A1.2.1.3.1	PERFORM VSCS, Receiving G/G Communications *notice of potential aircraft conflict*		
A1.2.1.4	INFORM CONTROLLER OF POTENTIAL AIRCRAFT CONFLICT IN HIS SECTOR		
	TASK TYPE: VC COORD MEDIA: V FREQUENCY: LOW CRITICALITY: EXT		
A1.2.1.4.1	PERFORM VSCS, Initiating G/G Communications *potential aircraft conflict in other sector*		
A1.2.1.5	FORWARD NOTICE OF AIRCRAFT CONFLICT TO SUPERVISOR		
	TASK TYPE: E/VC COORD MEDIA: V/M FREQUENCY: LOW CRITICALITY: LOW		
A1.2.1.5.1	PERFORM TEM M.2, Sending ATC Mail *aircraft conflict*		
	O		

TASK NUMBER / ELEMENT NUMBER	TASK STATEMENTS / DATA AND TASK ELEMENT STATEMENTS	OBJECTS	NO. OF OBJECTS
A1.2.1.5	FORWARD NOTICE OF AIRCRAFT CONFLICT TO SUPERVISOR		
	TASK TYPE: E/VC COORD MEDIA: V/M FREQUENCY: LOW CRITICALITY: LOW (Continued)		
A1.2.1.5.2	PERFORM VSCS, Initiating G/G Communications *aircraft conflict*		
A1. 1.7	REVIEW POTENTIAL CONFLICT SITUATION FOR RESOLUTION		
	TASK TYPE: R/A COORD MEDIA: FREQUENCY: LOW CRITICALITY: EXT		
A1.2.1.7.1	ACQUIRE _Position_Symbol, _Data_Block, _Position_History_ *of aircraft involved* on _Situation_Display regarding potential conflict	Position_Symbol Data_Block Position_History_ Situation_Display	2 2 2 1
A1.2.1.7.2	SYNTHESIZE altitude, speed, aircraft and time information into a mental traffic picture with regard to the separation of the potential conflict aircraft		
A1.2.1.7.3	EVALUATE need to resolve potential aircraft conflict		
A1.2.1.8	DETERMINE APPROPRIATE ACTION TO RESOLVE AIRCRAFT CONFLICT SITUATION		
	TASK TYPE: A COORD MEDIA: FREQUENCY: LOW CRITICALITY: EXT		
A1.2.1.8.1	DECIDE upon action needed to resolve aircraft conflict situation considering mental traffic picture and available conflict resolution options/ advisories		
A1.2.1.9	PERCEIVE POTENTIAL AIRCRAFT CONFLICT SITUATION		
	TASK TYPE: R/A COORD MEDIA: FREQUENCY: MED CRITICALITY: EXT		
A1.2.1.9.1	ACQUIRE _Position_Symbol, _Data_Block, _Background_Descriptor on the _Situation_Display for potential violations of aircraft separation standards A,C	Position_Symbol Data_Block Background_Descriptor Situation_Display	30 27 1 1
A1.2.1.9.2	ACQUIRE _Flight_Data_Entry, _Time on _Flight_Data_Display for information indicating a condition evolving into less than standard separation between aircraft	Flight_Data_Entry Time Flight_Data_Display	20 1 1
A1.2.1.9.3	SYNTHESIZE altitude, speed, and route information into a mental traffic picture *with regard to potential aircraft conflict situations*		
A1.2.1.9.4	RECOGNIZE potential aircraft conflict situation		
A1.2.2.1	DETECT MSAW INDICATION OR ALARM		
	TASK TYPE: R COORD MEDIA: FREQUENCY: LOW CRITICALITY: EXT		
A1.2.2.1.1	SCAN _Data_Block on _Situation_Display, _Alert_And_Resolution_Display, and Aural Environment for presence of alerts	Data_Block Situation_Display Alert_And_Resolution_Display	27 1 1
A1.2.2.1.2	DETECT _Minimum_Safe_Atlitude_Warning in _Full_Data_Block A/D	Minimum_Safe_Atlitude_Warning Full_Data_Block	1 1

TASK NUMBER / ELEMENT NUMBER	TASK STATEMENTS / DATA AND TASK ELEMENT STATEMENTS	OBJECTS	NO. OF OBJECTS
A1.2.2.1	DETECT MSAW INDICATION OR ALARM		
	TASK TYPE: R COORD M: FREQUENCY: LOW CRITICALITY: EXT (Continued)		
A1.2.2.1.3	DETECT _Minimum_Safe_Altitude_Warning and/ or _Aural_Alarm on _Alert_And_Resolution_Display	Minimum_Safe_Altitude_Warning Aural_Alarm Alert_And_Resolution_Display	1 1 1
A1.2.2.1.4	*INITIATE _Terminate_Auditory_Caution/Warning_Alarm message	Terminate_Auditory_Caution/Warning_Alarm	1
A1.2.2.1.5	*EXECUTE _Terminate_Auditory_Caution/Warning_Alarm message	Terminate_Auditory_Caution/Warning_Alarm	1
A1.2.2.1.6	*RECOGNIZE dissappearance of MSAW aural alarm from audio environment		
A1.2.2.2	FORWARD NOTICE OF VALID MSAW OR FLIGHT ASSIST TO SUPERVISOR		
	TASK TYPE: E/VC COORD MEDIA: V/M FREQUENCY: LOW CRITICALITY: LOW		
A1.2.2.2.1	PERFORM TEM M.2, Sending ATC Mail *MSAW or flight assist* O		
A1.2.2.2.2	PERFORM VSCS, Initiating G/G Communications *MSAW or flight assist*		
A1.2.2.3	RECEIVE CONTROLLER NOTICE OF POTENTIAL MSAW IN SECTOR		
	TASK TYPE: VC COORD MEDIA: V FREQUENCY: LOW CRITICALITY: EXT		
A1.2.2.3.1	PERFORM VSCS, Receiving G/G Communications *notice of potential MSAW*		
A1.2.2.4	INFORM CONTROLLER OF POTENTIAL MSAW IN HIS SECTOR		
	TASK TYPE: VC COORD MEDIA: V FREQUENCY: LOW CRITICALITY: EXT		
A1.2.2.4.1	PERFORM VSCS, Initiating G/G Communications *potential MSAW in sector*		
A1.2.2.5	PERCEIVE POTENTIAL LOW ALTITUDE SITUATION		
	TASK TYPE: R/A COORD MEDIA: FREQUENCY: MED CRITICALITY: EXT		
A1.2.2.5.1	ACQUIRE _Position_Symbol, _Data_Block, _Background_Descriptor on _Situation_Display for potential low altitude situation A/D	Position_Symbol Data_Block Background_Descriptor Situation_Display	30 27 1 1
A1.2.2.5.2	ACQUIRE _Flight_Data_Entry, _Time or _Flight_Data_Display for information indicating conditions developing into a low altitude situation	Flight_Data_Entry Time Flight_Data_Display	20 1 1
A1.2.2.5.3	INTEGRATE altitude, route, obstruction/ terrain, nonconformance indication and time information into a mental picture *with regard to potential low altitude situations*		
A1.2.2.5.4	RECOGNIZE potential low altitude situation		

TASK NUMBER / ELEMENT NUMBER	TASK STATEMENTS / DATA AND TASK ELEMENT STATEMENTS	OBJECTS	NO. OF OBJECTS
A1.2.2.6	DETERMINE VALIDITY OF MSAW NOTICE OR INDICATION		
	TASK TYPE: A COORD MEDIA: FREQUENCY: LOW CRITICALITY: HI		
A1.2.2.6.1	SEARCH _Geographic_Map_Data in _Background_Descriptor on the _Situation_Display for obstruction and terrain features A/O	Geographic_Map_Data Background_Descriptor Situation_Display	1 1 1
A1.2.2.6.2	SEARCH _Static_Information_Display charts for obstructions and terrain features	Static_Information_Display	1
A1.2.2.6.3	SYNTHESIZE the acquired information into a mental picture with regard to the current/ projected proximity of the aircraft to obstructions/ terrain		
A1.2.2.6.4	COMPARE the apparent MSAW situation with pilot intentions and/ or planned control actions		
A1.2.2.6.5	ASSESS the validity of the MSAW in consideration of the mental traffic picture		
A1.2.2.7	DETERMINE APPROPRIATE ACTION TO RESOLVE LOW ALTITUDE SITUATION		
	TASK TYPE: A COORD MEDIA: FREQUENCY: LOW CRITICALITY: EXT		
A1.2.2.7.1	DECIDE upon action needed to resolve low altitude situation considering mental traffic picture and available conflict resolution options		
A1.2.3.1	INFORM CONTROLLER OF POTENTIAL AIRSPACE CONFLICT IN HIS SECTOR		
	TASK TYPE: E/VC COORD MEDIA: V/M FREQUENCY: LOW CRITICALITY: EXT		
A1.2.3.1.1	PERFORM VSCS, Initiating G/G Communications *potential airspace conflict in other sector* C		
A1.2.3.1.2	PERFORM TEM M.2, Sending ATC Mail *potential airspace conflict in other sector*		
A1.2.3.2	RECEIVE CONTROLLER NOTICE OF POTENTIAL AIRSPACE CONFLICT IN SECTOR		
	TASK TYPE: VC COORD MEDIA: V FREQUENCY: LOW CRITICALITY: EXT		
A1.2.3.2.1	PERFORM VSCS, Receiving G/G Communications *notice of potential aircraft-airspace conflict affecting this sector*		
A1.2.3.3	REQUEST RELEASE OF SPECIAL USE AIRSPACE		
	TASK TYPE: E/VC COORD MEDIA: V/M FREQUENCY: LOW CRITICALITY: MED		
A1.2.3.3.1	PERFORM TEM M.2, Sending ATC Mail *request for release of special use airspace* O		

TASK NUMBER / ELEMENT NUMBER	TASK STATEMENTS / DATA AND TASK ELEMENT STATEMENTS	OBJECTS	NO. OF OBJECTS
A1.2.3.3	REQUEST RELEASE OF SPECIAL USE AIRSPACE		
	TASK TYPE: E/VC COORD MEDIA: V/M FREQUENCY: LOW CRITICALITY: MED (Continued)		
A1.2.3.3.2	PERFORM VSCS, Initiating G/G Communications *request for release of special use airspace*		
A1.2.3.4	RECEIVE DENIAL OF USE OF SPECIAL USE AIRSPACE		
	TASK TYPE: R/VC COORD MEDIA: V/M FREQUENCY: LOW CRITICALITY: MED		
A1.2.3.4.1	PERFORM TEM M.1, Receiving ATC Mail *denial of use of special use airspace*		
	O		
A1.2.3.4.2	PERFORM VSCS, Receiving G/G Communications *denial of use of special use airspace*		
A1.2.3.5	RECEIVE APPROVAL FOR USE OF SPECIAL USE AIRSPACE		
	TASK TYPE: R/VC COORD MEDIA: V/M FREQUENCY: LOW CRITICALITY: MED		
A1.2.3.5.1	PERFORM TEM M.1, Receiving ATC Mail *approval for use of special use airspace*		
	O		
A1.2.3.5.2	PERFORM VSCS, Receiving G/G Communications *approval of use of special use airspace*		
A1.2.3.7	PERCEIVE POTENTIAL AIRSPACE CONFLICT SITUATION		
	TASK TYPE: R/A COORD MEDIA: FREQUENCY: MED CRITICALITY: HI		
A1.2.3.7.1	ACQUIRE _Position_Symbol, _Data_Block, _Background_Descriptor, or _Situation_Display for potential violations of aircraft separation standards	Position_Symbol Data_Block Background_Descriptor Situation_Display	30 27 1 1
	A/O		
A1.2.3.7.2	ACQUIRE _Special_Use_Airspace_Status on the _System_Status_Data_Display for information on Special Use Airspace	Special_Use_Airspace_Status System_Status_Data_Display	1 1
	A/O		
A1.2.3.7.3	ACQUIRE _Flight_Data_Entry, _Time on _Flight_Data_Display for information pertaining to possible violation of airspace separation standards	Flight_Data_Entry Time Flight_Data_Display	28 1 1
A1.2.3.7.4	SYNTHESIZE altitude, route, special use airspace, aircraft type, speed and time information into a mental traffic picture with regard to violation of airspace separation standards		
A1.2.3.7.5	RECOGNIZE potential aircraft to airspace conflict		
A1.2.3.8	DETERMINE APPROPRIATE ACTION TO RESOLVE AIRSPACE CONFLICT SITUATION		
	TASK TYPE: A COORD MEDIA: FREQUENCY: LO CRITICALITY: HI		
A1.2.3.8.1	DECIDE upon action needed to resolve aircraft-to-airspace conflict situation considering mental traffic picture and available conflict resolution options		

TASK NUMBER / ELEMENT NUMBER	TASK STATEMENTS / DATA AND TASK ELEMENT STATEMENTS	OBJECTS	NO. OF OBJECTS
A1.2.3.75	DETERMINE VALIDITY OF AIRSPACE CONFLICT NOTICE		
	TASK TYPE: A COORD MEDIA: FREQUENCY: LOW CRITICALITY: HI		
A1.2.3.75.1	COMPARE airspace conflict indication with pilot intentions and/ or planned control actions		
A1.2.3.75.2	DETERMINE validity of airspace conflict notice		
A1.2.4.1	OBSERVE DISPLAY FOR FIXED OBSTRUCTIONS THAT MAY INTERFERE WITH AIRCRAFT FLIGHT		
	TASK TYPE: R/A COORD MEDIA: FREQUENCY: LOW CRITICALITY: HI		
A1.2.4.1.1	ACQUIRE _Position_Symbol, _Data_Block, _Background_Descriptor on _Situation_Display for obstruction interference to flight A/O	Position_Symbol Data_Block Background_Descriptor Situation_Display	30 27 1 1
A1.2.4.1.2	ACQUIRE _Flight_Data_Entry, _Time on _Flight_Data_Display for information pertinent to aircraft/ obstruction separation	Flight_Data_Entry Time Flight_Data_Display	20 1 1
A1.2.4.1.3	SYNTHESIZE altitude, route, obstruction, aircraft, and time information into a mental traffic picture with regard to aircraft obstruction clearance		
A1.2.4.1.4	RECOGNIZE a potential aircraft-to-obstruction separation violation		
A1.2.4.3	FORMULATE ADVISORY/ SAFETY ALERT CONTENT		
	TASK TYPE: A COORD MEDIA: FREQUENCY: LOW CRITICALITY: HI		
A1.2.4.3.1	FORMULATE contents of Advisory Service *advice and information to assist pilot in safe conduct of flight* O		
A1.2.4.3.2	FORMULATE contents of Safety Alert *advice and information which is of a critical nature to assist pilot in safe conduct of flight*		
A1.2.4.4	DETECT AIRCRAFT MANEUVER IN RESPONSE TO ADVISORY/ ALERT		
	TASK TYPE: R/A COORD MEDIA: FREQUENCY: LOW CRITICALITY: HI		
A1.2.4.4.1	SEARCH _Position_Symbol and _Full_Data_Block on _Situation_Display for information pertaining to aircraft maneuvering in response to advisory	Position_Symbol Full_Data_Block Situation_Display	1 1 1
A1.2.4.4.2	DETECT changes in movement of _Position_Symbol and _Full_Data_Block on _Situation_Display	Position_Symbol Full_Data_Block Situation_Display	1 1 1
A1.2.4.4.3	COMPARE _Position_Symbol and _Full_Data_Block movement to contents of advisory or safety alert	Position_Symbol Full_Data_Block	1 1

TASK NUMBER / ELEMENT NUMBER	TASK STATEMENTS / DATA AND TASK ELEMENT STATEMENTS	OBJECTS	NO. OF OBJECTS
A1.2.4.4	DETECT AIRCRAFT MANEUVER IN RESPONSE TO ADVISORY/ ALERT		
	TASK TYPE: R/A COORD MEDIA: FREQUENCY: LOW CRITICALITY: HI (Continued)		
A1.2.4.4.4	RECOGNIZE pilot compliance with advisory or safety alert		
A1.2.4.5	ISSUE TRAFFIC ADVISORY/ SAFETY ALERT IN REGARD TO TRAFFIC PROXIMITY		
	TASK TYPE: VC COORD MEDIA: V FREQUENCY: MED CRITICALITY: EXT		
A1.2.4.5.1	PERFORM VSCS, Communicating Normally Air-To-Ground *traffic advisory/ safety alert*		
A1.2.4.6	INFORM PILOT WHEN CLEAR OF TRAFFIC		
	TASK TYPE: VC COORD MEDIA: V FREQUENCY: MED CRITICALITY: LOW		
A1.2.4.6.1	PERFORM VSCS, Communicating Normally Air-To-Ground *inform pilot clear of traffic*		
A1.2.4.7	ISSUE ADVISORY IN REGARD TO A NON-CONTROLLED OBJECT		
	TASK TYPE: VC COORD MEDIA: V FREQUENCY: LOW CRITICALITY: HI		
A1.2.4.7.1	PERFORM VSCS, Communicating Normally Air-To-Ground *advisory in regard to non-controlled object*		
A1.2.4.8	INFORM PILOT WHEN CLEAR OF NON-CONTROLLED OBJECT		
	TASK TYPE: VC COORD MEDIA: V FREQUENCY: LOW CRITICALITY: LOW		
A1.2.4.8.1	PERFORM VSCS, Communicating Normally Air-To-Ground *pilot clear of non-controlled object*		
A1.2.4.9	ISSUE ADVISORY IN REGARD TO RESTRICTED AIRSPACE PROXIMITY		
	TASK TYPE: VC COORD MEDIA: V FREQUENCY: LOW CRITICALITY: MED		
A1.2.4.9.1	PERFORM VSCS, Communicating Normally Air-To-Ground *advisory in regard to restricted airspace*		
A1.2.4.10	ISSUE ADVISORY IN REGARD TO FLIGHT PLAN DEVIATION		
	TASK TYPE: VC COORD MEDIA: V FREQUENCY: LOW CRITICALITY: MED		
A1.2.4.10.1	PERFORM VSCS, Communicating Normally Air-To-Ground *advisory in regard to flight plan deviation*		
A1.2.4.12	ISSUE SAFETY ALERT IN REGARD TO MINIMUM ALTITUDE		
	TASK TYPE: VC COORD MEDIA: V FREQUENCY: LOW CRITICALITY: EXT		
A1.2.4.12.1	PERFORM VSCS, Communicating Normally Air-To-Ground *safety alert in regard to minimum en route/ obstruction clearance altitude*		
A1.2.4.13	OBSERVE DISPLAY FOR NON-CONTROLLED AIRBORNE OBJECTS THAT MAY INTERFERE WITH AIRCRAFT FLIGHT		
	TASK TYPE: R/A COORD MEDIA: FREQUENCY: LOW CRITICALITY: HI		
A1.2.4.13.1	SCAN _Position_Symbol, _Data_Block on _Situation_Display for information pertaining to aircraft/ non-controlled object separation	Position_Symbol Data_Block Situation_Display	30 27 1

TASK NUMBER / ELEMENT NUMBER	TASK STATEMENTS / DATA AND TASK ELEMENT STATEMENTS	OBJECTS	NO. OF OBJECTS
A1.2.4.13	OBSERVE DISPLAY FOR NON-CONTROLLED AIRBORNE OBJECTS THAT MAY INTERFERE WITH AIRCRAFT FLIGHT		
	TASK TYPE: R/A COORD MEDIA: FREQUENCY: LOW CRITICALITY: HI (Continued)		
A1.2.4.13.2	DETECT _Position_Symbol that is not associated with tracked targets	Position_Symbol	1
A1.2.4.13.3	SYNTHESIZE altitude, route, and position of non-controlled object(s) into a mental traffic picture relative to controlled traffic		
A1.2.4.13.4	RECOGNIZE a non-controlled airborne object which will interfere with traffic flow		
A1.2.4.14	DETERMINE NEED FOR ADVISORY/ SAFETY ALERT/ CLEARANCE		
	TASK TYPE: A COORD MEDIA: FREQUENCY: HI CRITICALITY: HI		
A1.2.4.14.1	SYNTHESIZE mental traffic picture to determine controller course of action		
A1.2.4.14.2	DECIDE the appropriate course of action *advisory, safety alert, or clearance*		
A1.2.5.2	SUPPRESS CONFLICT ALERT FOR PAIRED AIRCRAFT		
	TASK TYPE: E COORD MEDIA: FREQUENCY: LOW CRITICALITY: LOW		
A1.2.5.2.1	INITIATE _Suppress_Conflict_Alert_Pair message	Suppress_Conflict_Alert_Pair	1
A1.2.5.2.2	EXECUTE _Suppress_Conflict_Alert_Pair message	Suppress_Conflict_Alert_Pair	1
A1.2.5.2.3	DETECT system acceptance of the suppress conflict alert pair message		
A1.2.5.5	SUPPRESS MSAW FUNCTION FOR AN AIRCRAFT		
	TASK TYPE: E COORD MEDIA: FREQUENCY: LOW CRITICALITY: LOW		
A1.2.5.5.1	INITIATE _Suppress_MSAW_Alert message	Suppress_MSAW_Alert	1
A1.2.5.5.2	EXECUTE _Suppress_MSAW_Alert message	Suppress_MSAW_Alert	1
A1.2.5.5.3	RECOGNIZE system acceptance of _Suppress_MSAW_Alert message	Suppress_MSAW_Alert	1
A1.2.5.75	DETERMINE VALIDITY/ APPROPRIATENESS OF DISPLAY OF AN ALERT		
	TASK TYPE: R/A COORD MEDIA: FREQUENCY: LOW CRITICALITY: HI		
A1.2.5.75.1	ACQUIRE _Conflict_Alert_Indicator, _Position_Symbol, _Data_Block, and _Background_Descriptor on _Situation_Display for potential violation of aircraft separation standards A/D	Conflict_Alert_Indicator Position_Symbol Data_Block Background_Descriptor Situation_Display	1 30 27 1 1
A1.2.5.75.2	ACQUIRE _Conflict_Alert_Indicator on _Alert_And_Resolution_Display for information pertaining to unsafe condition advisory A/D	Conflict_Alert_Indicator Alert_And_Resolution_Display	1 1

TASK NUMBER / ELEMENT NUMBER	TASK STATEMENTS / DATA AND TASK ELEMENT STATEMENTS	OBJECTS	NO. OF OBJECTS
A1.2.5.75	DETERMINE VALIDITY/ APPROPRIATENESS OF DISPLAY OF AN ALERT		
	TASK TYPE: R/A COORD MEDIA: FREQUENCY: LOW CRITICALITY: HI (Continued)		
A1.2.5.75.3	ACQUIRE _Flight_Data_Entry on _Flight_Data_Display for information pertaining to unsafe condition advisory A/O	Flight_Data_Entry Flight_Data_Display	1 1
A1.2.5.75.4	ACQUIRE _Precipitation_Intensity *graphic ATC radar weather* from _Situation_Display A/O	Precipitation_Intensity Situation_Display	1 1
A1.2.5.75.5	ACQUIRE Agronautical And Meteorological Information for weather data not available to TAAS		
A1.2.5.75.6	SYNTHESIZE altitude, route, speed weather, and pilot intentions into a mental traffic picture		
A1.2.5.75.7	COMPARE mental traffic picture with pilot's intentions and/ or planned control actions		
A1.2.5.75.8	DECIDE if _Conflict_Alert_Indicator on _Situation_Display is appropriate A/O	Conflict_Alert_Indicator Situation_Display	1 1
A1.2.5.75.9	DECIDE if _Conflict_Alert_Indicator on _Alert_And_Resolution_Display is appropriate	Conflict_Alert_Indicator Alert_And_Resolution_Display	1 1
A1.2.5.76	RESTORE SPECIFIC ALERT FUNCTION TO NORMAL		
	TASK TYPE: E COORD MEDIA: FREQUENCY: LOW CRITICALITY: LOW		
A1.2.5.76.1	INITIATE _Request_Conflict_Alert_Pair message to restore to normal alert functionality	Request_Conflict_Alert_Pair	1
A1.2.5.76.2	EXECUTE _Request_Conflict_Alert_Pair message	Request_Conflict_Alert_Pair	1
A1.2.5.76.3	DETECT system acceptance of request conflict alert pair message O		
A1.2.5.76.4	INITIATE _Restore_MSAW_Alert message	Restore_MSAW_Alert	1
A1.2.5.76.5	EXECUTE _Restore_MSAW_Alert message	Restore_MSAW_Alert	1
A1.2.5.76.6	DETECT system acceptance of restore MSAW alert message		
A1.3.1.1	EVALUATE TRAFFIC MANAGEMENT CONSTRAINTS FOR EFFECT ON TRAFFIC FLOW		
	TASK TYPE: R/A COORD MEDIA: FREQUENCY: MED CRITICALITY: MED		
A1.3.1.1.1	ACQUIRE _Position_Symbol, _Data_Block, _Background_Descriptor, _Weather_Descriptor on _Situation_Display for information pertaining to traffic management restrictions A/O	Position_Symbol Data_Block Background_Descriptor Weather_Descriptor Situation_Display	20 27 1 2 1
A1.3.1.1.2	ACQUIRE _Flight_Data_Entry, _Time on _Flight_Data_Display for information pertaining to potential violation of flow restrictions A/O	Flight_Data_Entry Time Flight_Data_Display	20 1 1

TASK NUMBER / ELEMENT NUMBER	TASK STATEMENTS / DATA A&D TASK ELEMENT STATEMENTS	OBJECTS	NO. OF OBJECTS
A1.3.1.1	EVALUATE TRAFFIC MANAGEMENT CONSTRAINTS FOR EFFECT ON TRAFFIC FLOW		
	TASK TYPE: R/A COORD MEDIA: FREQUENCY: MED CRITICALITY: MED (Continued)		
A1.3.1.1.3	SEARCH Traffic Management Information for flow constraints		
A1.3.1.1.4	SYNTHESIZE route, altitude, speed, and traffic management into a mental traffic picture with regard to the impact of the restrictions		
A1.3.1.1.5	EVALUATE traffic management information for effect on traffic flow		
A1.3.1.2	CHOOSE OPTION TO BRING AIRCRAFT INTO CONFORMANCE WITH TRAFFIC MANAGEMENT RESTRICTIONS		
	TASK TYPE: R/A COORD MEDIA: FREQUENCY: LOW CRITICALITY: MED		
A1.3.1.2.1	PERCEIVE aircraft positions and movement from _Flight_Data_Entry and _Situation_Display	Flight_Data_Entry Situation_Display	27 1
A1.3.1.2.2	COMPARE traffic to traffic management constraints		
A1.3.1.2.3	DECIDE to vector/ reroute aircraft to bring aircraft into conformance with flow parameters O		
A1.3.1.2.4	DECIDE to change altitude of aircraft to bring aircraft into conformance with flow parameter O		
A1.3.1.2.5	DECIDE to change speed of aircraft to bring aircraft into conformance with flow parameters O		
A1.3.1.2.6	DECIDE to hold aircraft to bring aircraft into conformance with flow parameters		
A1.3.1.3	DISCUSS DISCONTINUANCE OF TRAFFIC MANAGEMENT RESTRICTION/ TRAFFIC REROUTE WITH SUPERVISOR		
	TASK TYPE: A/VC COORD MEDIA: V FREQUENCY: LOW CRITICALITY: LOW		
A1.3.1.3.1	PERFORM VSCS, Initiating G/G Communications *discuss whether flow parameters are necessary based upon current or expected traffic conditions* A		
A1.3.1.3.2	PERFORM VSCS, Receiving G/G Communications *discuss whether flow restrictions are necessary based upon current or expected traffic conditions*		
A1.3.1.4	REVIEW OPTIONS TO BRING AIRCRAFT INTO CONFORMANCE WITH TRAFFIC MANAGEMENT RESTRICTIONS		
	TASK TYPE: A COORD MEDIA: FREQUENCY: LOW CRITICALITY: MED		
A1.3.1.4.1	SYNTHESIZE altitude, route, and time information into mental traffic picture to decide the most appropriate action to bring an aircraft into conformance with flow parameters		

TASK NUMBER / ELEMENT NUMBER	TASK STATEMENTS / DATA AND TASK ELEMENT STATEMENTS	OBJECTS	NO. OF OBJECTS
A1.3.1.4	REVIEW OPTIONS TO BRING AIRCRAFT INTO CONFORMANCE WITH TRAFFIC MANAGEMENT RESTRICTIONS		
	TASK TYPE: A COORD MEDIA: FREQUENCY: LOW CRITICALITY: MED (Continued)		
A1.3.1.4.2	EVALUATE appropriateness of vectoring/ rerouting to bring aircraft into conformance with flow parameters		
A1.3.1.4.3	EVALUATE appropriateness of changing altitude to bring aircraft into conformance with flow parameters		
A1.3.1.4.4	EVALUATE appropriateness of changing speed to bring the aircraft into conformance with flow parameters		
A1.3.1.4.5	EVALUATE appropriateness of holding aircraft to bring aircraft into conformance with flow parameters		
A1.3.1.5	NEGOTIATE TRAFFIC MANAGEMENT ACTION WITH PILOT		
	TASK TYPE: VC COORD MEDIA: V FREQUENCY: LOW CRITICALITY: LOW		
A1.3.1.5.1	PERFORM VSCS, Communicating Normally Air-To-Ground *options (vectoring/ reroute, speed adjustment, altitude adjustment, holding) to conform to traffic management restrictions*		
A1.3.1.6	RECEIVE TRAFFIC MANAGEMENT RESTRICTION		
	TASK TYPE: R/VC COORD MEDIA: V/M FREQUENCY: LOW CRITICALITY: MED		
A1.3.1.6.1	PERFORM VSCS, Receiving G/G Communications *traffic management restrictions*	0	
A1.3.1.6.2	PERFORM TEM M.1, Receiving ATC Mail *traffic management restrictions*		
A1.3.1.8	RECEIVE SUPERVISOR NOTICE TO HOLD/ REROUTE TRAFFIC CLEAR OF CONTINGENCY		
	TASK TYPE: R/VC COORD MEDIA: V/M FREQUENCY: LOW CRITICALITY: MED		
A1.3.1.8.1	PERFORM VSCS, Receiving G/G Communications *notice from supervisor to hold or reroute trafic*	0	
A1.3.1.8.2	PERFORM TEM M.1, Receiving ATC Mail *notice from supervisor to hold or reroute traffic*		
A1.3.1.9	REQUEST EXCEPTION TO TRAFFIC MANAGEMENT RESTRICTION		
	TASK TYPE: R/VC COORD MEDIA: V/M FREQUENCY: LOW CRITICALITY: MED		
A1.3.1.9.1	PERFORM VSCS, Initiating G/G Communications *request exception to traffic management restrictions*	0	
A1.3.1.9.2	PERFORM TEM M.2, Sending ATC Mail *request exception to flow control restrictions*		
A1.3.1.10	REVIEW TRAFFIC DEMANDS AND TRAFFIC MANAGEMENT RESTRICTIONS WITH SUPERVISOR		
	TASK TYPE: ERA/VC COORD MEDIA: V/M FREQUENCY: LOW CRITICALITY: LOW		
A1.3.1.10.1	PERFORM VSCS, Receiving G/G Communications *review traffic conditions and traffic management parameters*	A	

TASK NUMBER / ELEMENT NUMBER	TASK STATEMENTS / DATA AND TASK ELEMENT STATEMENTS	OBJECTS	NO. OF OBJECTS
A1.3.1.10	REVIEW TRAFFIC DEMANDS AND TRAFFIC MANAGEMENT RESTRICTIONS WITH SUPERVISOR		
	TASK TYPE: ERA/VC COORD MEDIA: V/M FREQUENCY: LOW CRITICALITY: LOW (Continued)		
A1.3.1.10.2	PERFORM VSCS, Initiating G/G Communications *review traffic conditions and traffic management parameters* O		
A1.3.1.10.3	PERFORM TEM M.1, Receiving ATC Mail *review traffic conditions and traffic management parameters* A		
A1.3.1.10.4	PERFORM TEM M.2, Sending ATC Mail *review traffic conditions and traffic management parameters*		
A1.3.1.10.5	CROSS-REFERENCE _Situation_Display, _Flight_Data_Display, and _Special_Lists traffic information	Situation_Display Flight_Data_Display Special_Lists	1 1 1
A1.3.1.11	RECEIVE SUPERVISOR BRIEFING ON WHAT TRAFFIC CONDITIONS TO EXPECT		
	TASK TYPE: VC/A COORD MEDIA: V FREQUENCY: LOW CRITICALITY: LOW		
A1.3.1.11.1	PERFORM VSCS, Receiving G/G Communications *amount of traffic, upper winds, and weather during a specific shift or time period*		
A1.3.1.11.2	SYNTHESIZE information relating to expected traffic conditions		
A1.3.1.13	RECEIVE APPROVAL OF REQUEST FOR EXCEPTION TO FLOW RESTRICTION		
	TASK TYPE: R/VC COORD MEDIA: V/M FREQUENCY: LOW CRITICALITY: LOW		
A1.3.1.13.1	PERFORM VSCS, Receiving G/G Communications *approval for exception to traffic management parameter* O		
A1.3.1.13.2	PERFORM TEM M.1, Receiving ATC Mail *approval for traffic management restrictions*		
A1.3.1.14	RECEIVE DENIAL OF REQUEST FOR EXCEPTION TO FLOW RESTRICTION		
	TASK TYPE: R/VC COORD MEDIA: V/M FREQUENCY: LOW CRITICALITY: LOW		
A1.3.1.14.1	PERFORM VSCS, Receiving G/G Communications *denial of exception to traffic management parameter* O		
A1.3.1.14.2	PERFORM TEM M.1, Receiving ATC Mail *denial of exception to traffic management parameter*		
A1.3.1.75	REQUEST TRAFFIC MANAGEMENT ADVISORIES		
	TASK TYPE: R/E/VC COORD MEDIA: V/M FREQUENCY: LOW CRITICALITY: LOW		
A1.3.1.75.1	PERFORM TEM M.2, Sending ATC Mail *traffic management advisory*		
A1.3.1.75.2	PERFORM TEM M.1, Receiving ATC Mail *traffic management advisory* O		

TASK NUMBER / ELEMENT NUMBER	TASK STATEMENTS / DATA AND TASK ELEMENT STATEMENTS	OBJECTS	NO. OF OBJECTS
A1.3.1.75	REQUEST TRAFFIC MANAGEMENT ADVISORIES		
	TASK TYPE: R/E/VC COORD MEDIA: V/M FREQUENCY: LOW CRITICALITY: LOW (Continued)		
A1.3.1.75.3	PERFORM VSCS, Initiating G/G Communications *traffic		
A1.3.1.75.4	PERFORM TEM, Receiving G/G Communications *traffic management advisory*		
A1.3.2.1	PERCEIVE AN ALTITUDE OR ROUTE DEVIATION		
	TASK TYPE: R/A COORD MEDIA: FREQUENCY: LOW CRITICALITY: MED		
A1.3.2.1.1	ACQUIRE _Position_Symbol, _Data_Block, _Background_Descriptor, _Weather_Descriptor on _Situation_Display for potential violation of altitude/lateral/speed conformance A/D	Position_Symbol Data_Block Background_Descriptor Weather_Descriptor Situation_Display	30 27 1 2 1
A1.3.2.1.2	ACQUIRE _Flight_Data_Entry, _Time on _Flight_Data_Display for information pertaining to potential violation of altitude, speed, or route conformance criteria	Flight_Data_Entry Time Flight_Data_Display	20 1 1
A1.3.2.1.3	SYNTHESIZE route, altitude, speed, time, aircraft information into a mental traffic picture with regard to potential violation of altitude, speed, or route conformance criteria		
A1.3.2.1.4	RECOGNIZE potential violations of altitude, speed, or route conformance criteria		
A1.3.2.2	OBSERVE AIRCRAFT RESUMING NORMAL FLIGHT PLAN		
	TASK TYPE: R/A COORD MEDIA: FREQUENCY: LOW CRITICALITY: MED		
A1.3.2.2.1	ACQUIRE _Position_Symbol, _Full_Data_Block, _Track_Vector_And_Position_History on _Situation_Display to monitor aircraft's return to previously cleared course	Position_Symbol Full_Data_Block Track_Vector_And_Position_History Situation_Display	30 27 1 1
A1.3.2.2.2	DETECT changes in movement of _Position_Symbol, _Full_Data_Block, _Track_Vector and _Position_History	Position_Symbol Full_Data_Block Track_Vector Position_History	1 1 1 1
A1.3.2.2.3	RECOGNIZE aircraft responding and returning to cleared course		
A1.3.2.3	DETERMINE MANEUVER TO ESTABLISH/ RESTORE FLIGHT PLAN CONFORMANCE		
	TASK TYPE: A COORD MEDIA: FREQUENCY: LOW CRITICALITY: MED		
A1.3.2.3.1	INTEGRATE _Full_Data_Block, _Position_Symbol and _Flight_Data_Entry to determine the type of maneuver necessary to correct deviation	Full_Data_Block Position_Symbol Flight_Data_Entry	1 1 1
A1.3.2.3.2	FORMULATE a clearance and appropriate instructions to place an aircraft within conformance limits of previously issued clearance		

Task Element Report

TASK NUMBER / ELEMENT NUMBER	TASK STATEMENTS / DATA AND TASK ELEMENT STATEMENTS	OBJECTS	NO. OF OBJECTS
A1.3.2.4	RECEIVE CONTROLLER NOTICE OF AIRCRAFT FLIGHT PLAN DEVIATION		
	TASK TYPE: R/VC COORD MEDIA: V/M FREQUENCY: LOW CRITICALITY: MED		
A1.3.2.4.1	PERFORM TEM M.1, Receiving ATC Mail *notice of aircraft deviation from cleared route or altitude*		
	O		
A1.3.2.4.2	PERFORM VSCS, Receiving G/G Communications *notice of aircraft deviation from cleared route or altitude*		
A1.3.2.5	INFORM CONTROLLER/ SUPERVISOR OF AIRCRAFT FLIGHT PLAN DEVIATION		
	TASK TYPE: E/VC COORD MEDIA: V/M FREQUENCY: LOW CRITICALITY: MED		
A1.3.2.5.1	PERFORM VSCS, Initiating G/G Communications *informing supervisor or other controller of aircraft deviation*		
	O		
A1.3.2.5.2	PERFORM TEM M.1, Sending ATC Mail *informing supervisor or other controller of aircraft deviation*		
A1.3.2.9	REQUEST DISPLAY OF FDE FOR FLIGHT PLAN		
	TASK TYPE: E COORD MEDIA: FREQUENCY: LOW CRITICALITY: MED		
A1.3.2.9.1	INITIATE _Request_Flight_Data_Entry message to observe a specific flight plan	Request_Flight_Data_Entry	1
A1.3.2.9.2	EXECUTE _Request_Flight_Data_Entry message	Request_Flight_Data_Entry	1
A1.3.2.9.3	DETECT appearance of _Flight_Data_Entry on _Flight_Data_Display	Flight_Data_Entry Flight_Data_Display	1 1
A1.3.2.10	EVALUATE FLIGHT DATA TO DETERMINE FUTURE COURSE OF ACTION		
	TASK TYPE: R/A COORD MEDIA: FREQUENCY: HI CRITICALITY: MED		
A1.3.2.10.1	ACQUIRE _Flight_Data_Entry on _Flight_Data_Display or _Flight_Data in _Flight_Data_Readout_Area for information pertaining to nonconformance situation	Flight_Data_Entry Flight_Data_Display Flight_Data Flight_Data_Readout_Area	1 1 1 1
A1.3.2.10.2	INTEGRATE route, altitude and aircraft information with conformance criteria to determine course of action		
A1.3.2.10.3	DECIDE action needed to resolve nonconformance situation		
A1.3.2.12	EVALUATE ALTITUDE NONCONFORMANCE INDICATION FOR ACTION NEEDED		
	TASK TYPE: R/A COORD MEDIA: FREQUENCY: LOW CRITICALITY: HI		
A1.3.2.12.1	SEARCH _Full_Data_Block of aircraft with altitude nonconformance data on _Situation_Display	Full_Data_Block Situation_Display	1 1

TASK NUMBER / ELEMENT NUMBER	TASK STATEMENTS / DATA AND TASK ELEMENT STATEMENTS	OBJECTS	NO. OF OBJECTS
A1.3.2.12	EVALUATE ALTITUDE NONCONFORMANCE INDICATION FOR ACTION NEEDED		
	TASK TYPE: R/A COORD MEDIA: FREQUENCY: LOW CRITICALITY: HI (Continued)		
A1.3.2.12.2	EXTRACT _Mode_C_Altitude, _Pilot-Reported_Altitude or _Assigned_Altitude from _Full_Data_Block	Mode_C_Altitude Pilot-Reported_Altitude Assigned_Altitude Full_Data_Block	1 1 1 1
A1.3.2.12.3	EVALUATE possible courses of reconformance action		
A1.3.2.13	EVALUATE UNREASONABLE MODE C INDICATION FOR ACTION NEEDED		
	TASK TYPE: A COORD MEDIA: FREQUENCY: MED CRITICALITY: LOW		
A1.3.2.13.1	SYNTHESIZE the acquired information into a mental picture with regard to the Mode C unreasonableness indication		
A1.3.2.13.2	DECIDE the proper course of action		
A1.3.2.14	DETECT UNREASONABLE MODE C INDICATION		
	TASK TYPE: R COORD MEDIA: FREQUENCY: LOW CRITICALITY: MED		
A1.3.2.14.1	SEARCH _Full_Data_Block on _Situation_Display for presence of _Mode_C_Reasonableness_Check_Failure_Indication	Full_Data_Block Situation_Display Mode_C_Reasonableness_Check_Failure_Indicatio	15 1 1
A1.3.2.14.2	DETECT _Mode_C_Reasonableness_Check_Failure_Indication in _Full_Data_Block on Situation Display	Mode_C_Reasonableness_Check_Failure_Indicatio Full_Data_Block	1 1
A1.3.2.14.3	EXTRACT _Mode_C_Reasonableness_Check_Failure_Indication from _Full_Data_Block	Mode_C_Reasonableness_Check_Failure_Indicatio Full_Data_Block	1 1
A1.3.2.75	DETECT ALTITUDE NONCONFORMANCE INDICATION		
	TASK TYPE: R COORD MEDIA: FREQUENCY: LOW CRITICALITY: HI		
A1.3.2.75.1	SEARCH _Full_Data_Block on _Situation_Display for presence of _Altitude_Nonconformance_Indicator	Full_Data_Block Situation_Display Altitude_Nonconformance_Indicator	27 1 1
A1.3.2.75.2	DETECT _Altitude_Nonconformance_Indicator in _Full_Data_Block on Situation Display	Altitude_Nonconformance_Indicator Full_Data_Block	1 1
	A/O		
A1.3.2.75.3	SCAN _Flight_Data_Entry on _Flight_Data_Display for presence of _Altitude_Nonconformance_Indicator	Flight_Data_Entry Flight_Data_Display Altitude_Nonconformance_Indicator	20 1 1
A1.3.2.75.4	DETECT _Altitude_Nonconformance_Indicator in _Flight_Data_Entry on Flight Data Display	Altitude_Nonconformance_Indicator Flight_Data_Entry	1 1
A1.3.3.1	INFORM CONTROLLER/ SUPERVISOR/ PILOT OF AIRSPACE RESTRICTION IMPOSED/ RELEASE		
	TASK TYPE: E/VC COORD MEDIA: V/M FREQUENCY: LOW CRITICALITY: MED		
A1.3.3.1.1	PERFORM TEM M.2, Sending ATC Mail "notice to another controller or supervisor of the status of airspace restriction"		
	C		

TASK NUMBER / ELEMENT NUMBER	TASK STATEMENTS / DATA AND TASK ELEMENT STATEMENTS	OBJECTS	NO. OF OBJECTS
A1.3.3.1	INFORM CONTROLLER/ SUPERVISOR/ PILOT OF AIRSPACE RESTRICTION IMPOSED/ RELEASE		
	TASK TYPE: E/VC COORD MEDIA: V/M FREQUENCY: LOW CRITICALITY: MED (Continued)		
A1.3.3.1.2	PERFORM VSCS, Initiating G/G Communications *notice to another controller or supervisor of the status of airspace restriction*		
	O		
A1.3.3.1.3	PERFORM VSCS, Communicating Normally Air-To-Ground *advising a pilot of the status of restricted airspace*		
A1.3.3.3	RECEIVE REQUEST FOR USE OF SPECIAL USE AIRSPACE FROM SUPERVISOR/ CONTROLLER/ PILOT		
	TASK TYPE: R/VC COORD MEDIA: V/M FREQUENCY: LOW CRITICALITY: MED		
A1.3.3.3.1	PERFORM TEM M 1, Receiving ATC Mail *request from another controller or supervisor for use of special use airspace*		
	O		
A1.3.3.3.2	PERFORM VSCS, Receiving G/G Communications *request from another controller or supervisor for use of special use airspace*		
	O		
A1.3.3.3.3	PERFORM VSCS, Communicating Normally Air-To-Ground *request from pilot for use of special use airspace*		
A1.3.3.4	DETERMINE RESTRICTIONS TO USERS NECESSARY WITHIN RELEASED AIRSPACE		
	TASK TYPE: A COORD MEDIA: FREQUENCY: LOW CRITICALITY: LOW		
A1.3.3.4.1	INTEGRATE all available data into mental traffic picture to project effect of restrictions on all users		
A1.3.3.4.2	DETERMINE necessary restrictions to be applied for users of released airspace		
A1.3.3.5	OBSERVE DISPLAY OF AIRSPACE RESTRICTION STATUS CHANGE		
	TASK TYPE: R COORD MEDIA: FREQUENCY: LOW CRITICALITY: MED		
A1.3.3.5.1	ACQUIRE _Geographic_Map_Data on _Situation_Display *for information pertaining to airspace restriction status change*	Geographic_Map_Data Situation_Display	1 1
	A/O		
A1.3.3.5.2	ACQUIRE _Special_Use_Airspace_Status on _System_Status_Data_Display for altitude in use, use times, controlling agency	Special_Use_Airspace_Status System_Status_Data_Display	1 1
A1.3.3.5.3	COMPARE new airspace restriction information with previous data		
A1.3.3.5.4	RECOGNIZE difference between acquired data and previous airspace restriction data		
A1.3.3.6	RECEIVE NOTICE OF AIRSPACE RESTRICTION/ RELEASE		
	TASK TYPE: R/VC COORD MEDIA: V/M FREQUENCY: LOW CRITICALITY: MED		
A1.3.3.6.1	PERFORM TEM M.1, Receiving ATC Mail *notice of airspace restriction/ release*		
	O		

TASK NUMBER / ELEMENT NUMBER	TASK STATEMENTS / DATA AND TASK ELEMENT STATEMENTS	OBJECTS	NO. OF OBJECTS
A1.3.3.6	RECEIVE NOTICE OF AIRSPACE RESTRICTION/ RELEASE		
	TASK TYPE: R/VC COORD MEDIA: V/M FREQUENCY: LOW CRITICALITY: MED (Continued)		
A1.3.3.6.2	PERFORM VSCS, Receiving Ground-To-Ground Communications *notice of airspace restriction/ release*		
	O		
A1.3.3.6.3	PERFORM VSCS, Communicating Normally Air-To-Ground *notice of airspace restriction/ release from pilot*		
A1.3.4.1	DETERMINE DESCENT TIME OR POINT		
	TASK TYPE: R/A COORD MEDIA: FREQUENCY: HI CRITICALITY: MED		
A1.3.4 1.1	ACQUIRE _Position_Symbol, _Data_Block, _Background_Descriptor, _Weather_Descriptor on _Situation_Display for information applicable to establishing arrival patterns	Position_Symbol Data_Block Background_Descriptor Weather_Descriptor Situation_Display	30 27 1 2 1
	A/O		
A1.3.4.1.2	ACQUIRE Traffic Management Information for flow constraints		
A1.3.4.1.3	SYNTHESIZE altitude, route, speed and flow restrictions into a mental traffic picture with regard to establishing arrival patterns		
A1.3.4.1.4	DECIDE descent time or point for each aircraft		
A1 3.4 2	PROJECT TRAFFIC SEQUENCE TO ESTABLISH/ MODIFY APPROACH FLOW TO AIRPORT OR SECTOR		
	TASK TYPE: A COORD MEDIA. FREQUENCY: HI CRITICALITY: HI		
A1.3.4.2.1	ACQUIRE _Position_Symbol and _Data_Block on _Situation_Display for information pertaining to aircraft landing in or near this sector	Position_Symbol Data_Block Situation_Display	30 27 1
	A/O		
A1.3.4.2.2	ACQUIRE _Flight_Data_Entry, _Time on _Flight_Data_Display *for aircraft landing in or near this sector*	Flight_Data_Entry Time Flight_Data_Display	20 1 1
A1.3.4.2.3	RECOGNIZE aircraft landing in this sector based on _Destination_Airport in _Full_Data_Block or _Flight_Data_Entry	Destination_Airport Full_Data_Block Flight_Data_Entry	1 15 15
A1.3.4.2.4	SYNTHESIZE acquired destination information into mental picture of arrival flow of aircraft in or near terminal area		
A1.3.4.4	REQUEST AIRCRAFT BE REROUTED		
	TASK TYPE: E/VC COORD MEDIA: V/M FREQUENCY: LOW CRITICALITY: MED		
A1 3.4.4.1	PERFORM VSCS, Initiating G/G Communications *request aircraft be rerouted*		
	O		
A1.3.4.4.2	PERFORM TEM M.2, Sending ATC Mail *request for reroute*		

TASK NUMBER / ELEMENT NUMBER	TASK STATEMENTS / DATA AND TASK ELEMENT STATEMENTS	OBJECTS	NO. OF OBJECTS
A1.3.4.5	PROJECT MENTALLY THE RANGE/ BEARING BETWEEN AIRCRAFT		
	TASK TYPE: R/A COORD MEDIA: FREQUENCY: HI CRITICALITY: HI		
A1.3.4.5.1	ACQUIRE _Position_Symbol, _Full_Data_Block, _Background_Descriptor on _Situation_Display for information pertaining to mental projection of range/ bearing between aircraft	Position_Symbol Full_Data_Block Background_Descriptor Situation_Display	2 2 1 1
A1.3.4.5.2	EXTRAPOLATE the range and bearing between aircraft from the range rings, longitudinal scale, speed, and other pertinent information		
A1.3.4.6	PROJECT MENTALLY THE ARRIVAL FLOW FOR AIRCRAFT LANDING IN OR NEAR THIS SECTOR		
	TASK TYPE: A COORD MEDIA: FREQUENCY: HI CRITICALITY: MED		
A1.3.4.6.1	ACQUIRE _Position_Symbol, _Data_Block on _Situation_Display for information pertaining to aircraft landing in or near this terminal area	Position_Symbol Data_Block Situation_Display	30 27 1
	A/O		
A1.3.4.6.2	ACQUIRE _Flight_Data_Entry, _Time on _Flight_Data_Display *for aircraft landing in or near terminal area*	Flight_Data_Entry Time Flight_Data_Display	15 1 1
A1.3.4.6.3	RECOGNIZE aircraft landing in or near the terminal area		
A1.3.4.6.4	SYNTHESIZE acquired destination information into mental picture of arrival flow of aircraft in or near terminal area		
A1.3.4.7	ISSUE NEW ATIS CODE		
	TASK TYPE: VC COORD MEDIA: V FREQUENCY: MED CRITICALITY: MED		
A1.3.4.7.1	PERFORM VSCS, Initiating G/G Communications *issue new ATIS code to pilot*		
A1.3.4.8	INFORM PILOT TO OBTAIN NEW ATIS INFORMATION		
	TASK TYPE: VC COORD MEDIA: V FREQUENCY: LOW CRITICALITY: LOW		
A1.3.4.8.1	PERFORM VSCS, Communicating Normally Air-To-Ground *inform pilot to obtain ATIS information*		
A1.3.4.9	ISSUE ATIS INFORMATION		
	TASK TYPE: VC COORD MEDIA: V FREQUENCY: MED CRITICALITY: LOW		
A1.3.4.9.1	PERFORM VSCS, Communicating Normally Air-To-Ground *issuue new ATIS information to pilot*		
A1.3.5.1	VALIDATE MODE C ALTITUDE		
	TASK TYPE: R/A COORD MEDIA: FREQUENCY: HI CRITICALITY: HI		
A1.3.5.1.1	SEARCH _Full_Data_Block on _Situation_Display for information related to aircraft mode C altitude	Full_Data_Block Situation_Display	1 1

TASK NUMBER / ELEMENT NUMBER	TASK STATEMENTS / DATA AND TASK ELEMENT STATEMENTS	OBJECTS	NO. OF OBJECTS
A1.3.5.1	VALIDATE MODE C ALTITUDE		
	TASK TYPE: R/A COORD MEDIA: FREQUENCY: HI CRITICALITY: HI (Continued)		
A1.3.5.1.2	EXTRACT _Mode_C_Altitude from the _Full_Data_Block, _Partial_Data_Block on the _Situation_Display *aircraft's current altitude*	Mode_C_Altitude Full_Data_Block Partial_Data_Block Situation_Display	1 1 1 1
A1.3.5.1.3	COMPARE _Mode_C_Altitude and _Assigned_Altitude with the pilot reported altitude	Mode_C_Altitude Assigned_Altitude	1 1
A1.3.5.1.4	DECIDE the validity of _Mode_C_Altitude displayed for aircraft	Mode_C_Altitude	1
A1.3.5.2	ENTER REPORTED ALTITUDE		
	TASK TYPE: E COORD MEDIA: FREQUENCY: MED CRITICALITY: MED		
A1.3.5.2.1	INITIATE _Reported_Altitude message *to enter a reported altitude*	Reported_Altitude	1
A1.3.5.2.2	EXECUTE _Reported_Altitude message	Reported_Altitude	1
A1.3.5.2.3	DETECT appearance of reported altitude and/ or FDEN information in the _Flight_Data_Entry on the Flight Data Display	Flight_Data_Entry	1
	A/O		
A1.3.5.2.4	DETECT appearance of reported altitude information in_Full_Data_Block on _Situation_Display	Full_Data_Block Situation_Display	1 1
A1.3.5.3	RECEIVE NOTICE OF MISSED APPROACH		
	TASK TYPE: R/VC COORD MEDIA: V/F FREQUENCY: LOW CRITICALITY: EXT		
A1.3.5.3.1	PERFORM VSCS, Receiving G/G Communications *notice of missed approach*		
	O		
A1.3.5.3.2	PERFORM VSCS, Communicating Normally Air-To-Ground *notice of missed approach*		
	G		
A1.3.5.3.3	DETECT emphasized _Data_Block on the _Situation_Display *to receive control of an arrival that has executed a missed approach*	Data_Block Situation_Display	1 1
A1.3.5.4	PROJECT TRAFFIC SEQUENCE TO ESTABLISH/ MODIFY DEPARTURE FLOW		
	TASK TYPE: A COORD MEDIA: FREQUENCY: HI CRITICALITY: MED		
A1.3.5.4.1	ACQUIRE _Airport_Information and _Departure_List for information pertaining to aircraft departures and runway departure rate	Airport_Information Departure_List	1 1
	A/O		
A1.3.5.4.2	ACQUIRE _Position_Symbol, _Data_Block, _Time on _Situation_Display for information affecting aircraft departing in or through terminal area	Position_Symbol Data_Block Time Situation_Display	30 27 1 1
	A/O		
A1.3.5.4.3	ACQUIRE _Flight_Data_Entry, _Time on _Flight_Data_Display *for aircraft departing in or through terminal area*	Flight_Data_Entry Time Flight_Data_Display	20 1 1

TASK NUMBER / ELEMENT NUMBER	TASK STATEMENTS / DATA AND TASK ELEMENT STATEMENTS	OBJECTS	NO. OF OBJECTS
A1.3.5.4	PROJECT TRAFFIC SEQUENCE TO ESTABLISH/ MODIFY DEPARTURE FLOW		
	TASK TYPE: A COORD MEDIA: FREQUENCY: HI CRITICALITY: MED (Continued)		
A1.3.5.4.4	RECOGNIZE aircraft departing in or through this sector based on _Departure_Point, _Proposed_Departure_Time or _Actual_Departure_Time in _Flight_Data_Entry on Flight Data Display A/O	Departure_Point Proposed_Departure_Time Actual_Departure_Time Flight_Data_Entry	1 1 1 15
A1.3.5.4.5	RECOGNIZE aircraft departing in or through this sector through matching _Callsign in _Flight_Data_Entry and _Callsign in _Departure_List	Callsign Flight_Data_Entry Callsign Departure_List	1 15 1 1
A1.3.5.4.6	SYNTHESIZE extracted information into a mental picture of departure flow in relation to the overall mental traffic picture		
A1.3.5.4.7	PROJECT traffic sequence to establish/ modify departure flow based on mental traffic picture		
A1.3.6.1	OBSERVE AIRSPACE INTRUSION BY A NON-CONTROLLED OBJECT		
	TASK TYPE: R COORD MEDIA: FREQUENCY: LOW CRITICALITY: MED		
A1.3.6.1.1	SCAN _Target_Position_Symbol, _Data_Block on _Situation_Display for possible non-controlled object	Target_Position_Symbol Data_Block Situation_Display	30 27 1
A1.3.6.1.2	DETECT _Target_Position_Symbol not associated with _Data_Block *non-controlled object*	Target_Position_Symbol Data_Block	1 1
A1.3.6.2	ENTER CONTROLLER NOTE		
	TASK TYPE: E COORD MEDIA: FREQUENCY: LOW CRITICALITY: LOW		
A1.3.6.2.1	INITIATE _Controller_Note message	Controller_Note	1
A1.3.6.2.2	EXECUTE _Controller_Note message	Controller_Note	1
A1.3.6.2.3	DETECT appearance of controller entered note on the _Controller_Notepad_Display	Controller_Notepad_Display	1
A1.3.6.3	FLIGHT-FOLLOW AN OBSERVED NON-CONTROLLED OBJECT		
	TASK TYPE: E/R/A COORD MEDIA: FREQUENCY: LOW CRITICALITY: MED		
A1.3.6.3.1	INITIATE _Track message to start a track/ flight follow non-controlled object	Track	1
A1.3.6.3.2	EXECUTE _Track message	Track	1
A1.3.6.3.3	DETECT _Full_Data_Block on the _Situation_Display *non-controlled object becomes a tracked data block*	Full_Data_Block Situation_Display	1 1
A1.3.6.3.4	ASSESS track movement of non-controlled object		
A1.3.6.4	FORWARD NOTICE OF AIRSPACE INTRUSION BY A NON-CONTROLLED OBJECT		
	TASK TYPE: E/VC COORD MEDIA: V/M FREQUENCY: LOW CRITICALITY: LOW		
A1.3.6.4.1	PERFORM TEM M.2, Sending ATC Mail *notice of airspace intrusion by non-controlled object* O		

TASK NUMBER / ELEMENT NUMBER	TASK STATEMENTS / DATA AND TASK ELEMENT STATEMENTS	OBJECTS	NO. OF OBJECTS
A1.3.6.4	FORWARD NOTICE OF AIRSPACE INTRUSION BY A NON-CONTROLLED OBJECT		
	TASK TYPE: E/VC COORD MEDIA: V/M FREQUENCY: LOW CRITICALITY: LOW (Continued)		
A1.3.6.4.2	PERFORM VSCS, Initiating G/G Communications *notice of airspace intrusion by non-controlled object*		
A1.3.6.5	RECEIVE NOTICE OF AIRSPACE INTRUSION BY A NON-CONTROLLED OBJECT		
	TASK TYPE: R/VC COORD MEDIA: V/M FREQUENCY: LOW CRITICALITY: LOW		
A1.3.6.5.1	PERFORM VSCS, Receiving G/G Communications *notice oo airspace intrusion by non-controlled object*		
	O		
A1.3.6.5.2	PERFORM TEM M.1, Receiving ATC Mail *notice of airspace intrusion by a non-controlled object*		
A1.3.7.1	RECEIVE CONTROLLER/ SUPERVISOR REQUEST FOR TEMPORARY USE OF AIRSPACE		
	TASK TYPE: R/VC COORD MEDIA: V/M FREQUENCY: LOW CRITICALITY: MED		
A1.3.7.1.1	PERFORM TEM M.1, Receiving ATC Mail *request from controller/ supervisor for use of airspace*		
	O		
A1.3.7.1.2	PERFORM VSCS, Receiving G/G Communications *request from controller/ supervisor for use of airspace*		
A1.3.7.2	FORWARD APPROVAL FOR TEMPORARY USE OF AIRSPACE		
	TASK TYPE: E/VC COORD MEDIA: V/M FREQUENCY: LOW CRITICALITY: MED		
A1.3.7.2.1	PERFORM TEM M.2, Sending ATC Mail *notice of airspace release *		
	O		
A1.3.7.2.2	PERFORM VSCS, Initiating G/G Communications *notice of airspace release*		
A1.3.7.3	FORWARD DENIAL OF TEMPORARY USE OF AIRSPACE		
	TASK TYPE: E/VC COORD MEDIA: V/M FREQUENCY: LOW CRITICALITY: MED		
A1.3.7.3.1	PERFORM TEM M.2, Sending ATC Mail *notice of denial of request for airspace release*		
	O		
A1.3.7.3.2	PERFORM VSCS, Initiating G/G Communications *notice of denial of request for airspace release*		
A1.3.7.4	SUPPRESS MAP ASSOCIATED WITH TEMPORARY USE OF AIRSPACE		
	TASK TYPE: E COORD MEDIA: FREQUENCY: LOW CRITICALITY: LOW		
A1.3.7.4.1	INITIATE _Inhibit_Category_Of_Geographic_Map_Data message *suppress display of temporary use airspace boundary*	Inhibit_Category_Of_Geographic_Map_Data	1
A1.3.7.4.2	EXECUTE _Inhibit_Category_Of_Geographic_Map_Data message	Inhibit_Category_Of_Geographic_Map_Data	1

TASK NUMBER / ELEMENT NUMBER	TASK STATEMENTS / DATA AND TASK ELEMENT STATEMENTS	OBJECTS	NO. OF OBJECTS
A1.3.7.4	SUPPRESS MAP ASSOCIATED WITH TEMPORARY USE OF AIRSPACE		
	TASK TYPE: E COORD MEDIA: FREQUENCY: LOW CRITICALITY: LOW (Continued)		
A1.3.7.4.3	RECOGNIZE suppression of _Special_Use_Airspace_Boundary from _Geographic_Map_Data on Situation Display	Special_Use_Airspace_Boundary Geographic_Map_Data	1 1
A1.3.7.5	DISCUSS RELEASE OF AIRSPACE FOR TEMPORARY USE WITH SUPERVISOR/ OTHER CONTROLLER		
	TASK TYPE: A/VC COORD MEDIA: V FREQUENCY: LOW CRITICALITY: LOW		
A1.3.7.5.1	PERFORM VSCS, Initiating G/G Communications *release of airspace for temporary use*		
A1.3.7.5.2	PERFORM VSCS, Receiving G/G Communications *release of airspace for temporary use*		
A1 3.7.5.3	EVALUATE merits of equipment release		
A1.3.7.6	SELECT MAP DISPLAY OF ADAPTED AIRSPACE REQUESTED FOR USE BY ANOTHER CONTROLLER		
	TASK TYPE: E COORD MEDIA: FREQUENCY: LOW CRITICALITY: LOW		
A1.3.7.6.1	INITIATE _Select_Category_Of_Geographic _Map_Data message *restore display of temporary use airspace boundary*	Select_Category_Of_Geographic_Map_Data	1
A1.3.7.6.2	EXECUTE _Select_Category_Of_Geographic_ Map_Data message	Select_Category_Of_Geographic_Map_Data	1
A1.3.7.6.3	DETECT appearance of _Special_Use_Airspace_Boundary *geographic map data* on _Situation_Display	Special_Use_Airspace_Boundary Situation_Display	1 1
A1.3.7.7	EVALUATE FEASIBILITY OF RELEASING AIRSPACE TEMPORARILY		
	TASK TYPE: R/A COORD MEDIA: FREQUENCY: LOW CRITICALITY: LOW		
A1.3.7.7.1	ACQUIRE _Position_Symbol, _Data_Block, _Background_Descriptor, _Weather_Descriptor on _Situation_Display for information pertaining to temporarily releasing airspace A/O	Position_Symbol Data_Block Background_Descriptor Weather_Descriptor Situation_Display	30 27 1 2 1
A1.3.7.7.2	ACQUIRE _Flight_Data_Entry, _Time on _Flight_Data_Display for information pertaining to temporary release of airspace	Flight_Data_Entry Time Flight_Data_Display	20 1 1
A1.3.7.7.3	SYNTHESIZE route, altitude, airspace boundary, and other information into a mental traffic picture with regard to approving temporary use of airspace		
A1.3.7.7.4	DECIDE feasibility of temporarily releasing airspace to another controller		
A1.3.7.8	RECEIVE NOTIFICATION OF RETURN OF RELEASED AIRSPACE		
	TASK TYPE: R/VC COORD MEDIA: V/M FREQUENCY: LOW CRITICALITY: MED		
A1.3.7.8.1	PERFORM TEM M.1, Receiving ATC Mail *notice of release of airspace*		

TASK NUMBER / ELEMENT NUMBER	TASK STATEMENTS / DATA AND TASK ELEMENT STATEMENTS	OBJECTS	NO. OF OBJECTS
A1.3.7.8	RECEIVE NOTIFICATION OF RETURN OF RELEASED AIRSPACE		
	TASK TYPE: R/VC COORD MEDIA: V/M FREQUENCY: LOW CRITICALITY: MED (Continued)		
A1.3.7.8.2	PERFORM VSCS, Receiving G/G Communications *notice of release of airspace*		
A1.3.8.1	REQUEST TEMPORARY USE OF AIRSPACE		
	TASK TYPE: E/VC COORD MEDIA: V/M FREQUENCY: LOW CRITICALITY: MED		
A1.3.8.1.1	*SEARCH _Controller_Chart on _Static_Information_Display for identification of airspace needed for temporary use	Controller_Chart Static_Information_Display	1 1
A1.3.8.1.2	*EXTRACT adapted name or location of airspace needed for temporary use from _Static_Information_Display	Static_Information_Display	1
A1.3.8.1.3	PERFORM VSCS, Initiating G/G Communications *airspace ID, altitude, and duration of use (requesting use of airspace)*		
	O		
A1.3.8.1.4	PERFORM TEM M.2, Sending ATC Mail *airspace ID, altitude, duration of use (requesting use of airspace)*		
A1.3.8.2	RECEIVE RELEASE/ USE OF AIRSPACE		
	TASK TYPE: R/VC COORD MEDIA: V/M FREQUENCY: LOW CRITICALITY: LOW		
A1.3.8.2.1	PERFORM VSCS, Receiving G/G Communications *notice of release of airspace*		
	O		
A1.3.8.2.2	PERFORM TEM M.1, Receiving ATC Mail *notice of release of airspace*		
A1.3.8.3	RECEIVE REJECTION OF USE OF AIRSPACE		
	TASK TYPE: R/VC COORD MEDIA: V/M FREQUENCY: LOW CRITICALITY: MED		
A1.3.8.3.1	PERFORM VSCS, Receiving G/G Communications *denial of use of airspace*		
	O		
A1.3.8.3.2	PERFORM TEM M.1, Receiving ATC Mail *denial of use of airspace*		
A1.3.8.4	FORWARD NOTICE OF RETURN OF RELEASED AIRSPACE		
	TASK TYPE: E/VC COORD MEDIA: V/M FREQUENCY: LOW CRITICALITY: MED		
A1.3.8.4.1	PERFORM TEM M.2, Sending ATC Mail *notice of release of airspace*		
	O		
A1.3.8.4.2	PERFORM VSCS, Initiating G/G Communications *notice of release of airspace*		
A1.4.1.1	RECEIVE CONTROLLER NOTICE ON REQUESTED CLEARANCE OF AIRCRAFT LEAVING HIS SECTOR		
	TASK TYPE: R/VC COORD MEDIA: V/M FREQUENCY: LOW CRITICALITY: MED		
A1.4.1.1.1	PERFORM VSCS, Receiving G/G Communications *notice of clearance request*		
	O		

Task Element Report

TASK NUMBER / ELEMENT NUMBER	TASK STATEMENTS / DATA AND TASK ELEMENT STATEMENTS	OBJECTS	NO. OF OBJECTS
A1.4.1.1	RECEIVE CONTROLLER NOTICE ON REQUESTED CLEARANCE OF AIRCRAFT LEAVING HIS SECTOR		
	TASK TYPE: R/VC COORD MEDIA: V/M FREQUENCY: LOW CRITICALITY: MED (Continued)		
A1.4.1.1.2	PERFORM TEM M.1, Receiving ATC Mail *notice of clearance request*		
A1.4.1.2	RECEIVE CLEARANCE REQUEST FROM ATCT/ FSS/ PILOT/ SUPERVISOR		
	TASK TYPE: R/VC COORD MEDIA: V/M FREQUENCY: MED CRITICALITY: MED		
A1.4.1.2.1	PERFORM TEM M.1, Receiving ATC Mail *relayed clearance request*		
	O		
A1.4.1.2.2	PERFORM VSCS, Receiving G/G Communications *relayed clearance request*		
A1.4.1.2.3	PERFORM VSCS, Communicating Normally Air-To-Ground *clearance request from pilot*		
A1.4.1.3	RECEIVE CONTROLLER REQUEST FOR CLEARANCE/ APPROVAL		
	TASK TYPE: R/VC COORD MEDIA: V/M FREQUENCY: HI CRITICALITY: MED		
A1.4.1.3.1	PERFORM TEM M.1, Receiving ATC Mail *clearance/ approval request*		
	O		
A1.4.1.3.2	PERFORM VSCS, Receiving G/G Communications *clearance/ approval request*		
A1.4.1.4	FORWARD CLEARANCE REQUEST TO ANOTHER CONTROLLER		
	TASK TYPE: E/VC COORD MEDIA: V/M FREQUENCY: HI CRITICALITY: MED		
A1.4.1.4.1	PERFORM TEM M.2, Sending ATC Mail *forward clearance request*		
	O		
A1.4.1.4.2	PERFORM VSCS, Initiating G/G Communications *forward clearance request*		
A1.4.1.5	REQUEST CLEARANCE/ APPROVAL FROM ANOTHER CONTROLLER		
	TASK TYPE: E/VC COORD MEDIA: V/M FREQUENCY: HI CRITICALITY: MED		
A1.4.1.5.1	DECIDE need to coordinate a clearance with another controller		
A1.4.1.5.2	PERFORM TEM M.2, Sending ATC Mail *clearance/ approval request*		
	A/O		
A1.4.1.5.3	PERFORM VSCS, Initiating G/G Communications *clearance/ approval request*		
A1.4.1.6	RECEIVE CLEARANCE APPROVAL/ CLEARANCE RESTRICTIONS FROM ANOTHER CONTROLLER		
	TASK TYPE: R/VC COORD MEDIA: V/M FREQUENCY: HI CRITICALITY: HI		
A1.4.1.6.1	PERFORM TEM M.1, Receiving ATC Mail *clearance approval/ restrictions*		
	O		
A1.4.1.6.2	PERFORM VSCS, Receiving G/G Communications *clearance approval/ restrictions*		

TASK NUMBER / ELEMENT NUMBER	TASK STATEMENTS / DATA AND TASK ELEMENT STATEMENTS	OBJECTS	NO. OF OBJECTS
A1.4.1.7	RECEIVE CLEARANCE DISAPPROVAL/ DENIAL FROM ANOTHER CONTROLLER		
	TASK TYPE: R/VC COORD MEDIA: V/M FREQUENCY: LOW CRITICALITY: MED		
A1.4.1.7.1	PERFORM TEM M.1, Receiving ATC Mail *clearance rejection*		
A1.4.1.7.2	PERFORM VSCS, Receiving G/G Communications *clearance rejection/ denial*		
A1.4.1.8	RECEIVE ALTERNATE SUGGESTION FOR CLEARANCE/ APPROVAL REQUESTED OF ANOTHER CONTROLLER		
	TASK TYPE: R/VC COORD MEDIA: V/M FREQUENCY: LOW CRITICALITY: MED		
A1.4.1.8.1	PERFORM TEM M.1, Receiving ATC Mail *alternate instructions*		
A1.4.1.8.2	PERFORM VSCS, Receiving G/G Communications *alternate instructions*		
A1.4.1.10	REVIEW POTENTIAL IMPEDIMENTS FOR IMPACT ON PROPOSED CLEARANCE		
	TASK TYPE: R/A COORD MEDIA: FREQUENCY: HI CRITICALITY: MED		
A1.4.1.10.1	ACQUIRE _Position_Symbol, _Data_Block, _Background_Descriptor, _Weather_Descriptor on _Situation_Dislay for information pertaining to impact on proposed clearance	Position_Symbol Data_Block Background_Descriptor Weather_Descriptor Situation_Dislay	30 27 1 2 1
	A/O		
A1.4.1.10.2	ACQUIRE _Flight_Data_Entry, _Time on _Flight_Data_Display for information pertaining to factors which will impact proposed clearance	Flight_Data_Entry Time Flight_Data_Display	20 1 1
A1.4.1.10.3	SYNTHESIZE altitude, route, weather, speed, destination, special use airspace, and time information into a mental traffic picture with regard to factors which will impact proposed clearnace		
A1.4.1.10.4	RECOGNIZE factors which will impact proposed clearance		
A1.4.1.12	DISCUSS CLEARANCE ALTERNATIVES WITH PILOT		
	TASK TYPE: VC COORD MEDIA: V FREQUENCY: LOW CRITICALITY: MED		
A1.4.1.12.1	PERFORM VSCS, Communicating Normally Air-To-Ground *determine the course of action suitable for traffic demands*		
A1.4.1.13	EVALUATE FDE CHANGES FOR CLEARANCE PLANNING OR FUTURE ACTIONS		
	TASK TYPE: R/A COORD MEDIA: FREQUENCY: LOW CRITICALITY: MED		
A1.4.1.13.1	SCAN _Flight_Data_Entry on the _Flight_Data_Display for changes in flight data which could affect controller planning	Flight_Data_Entry Flight_Data_Display	20 1

TASK NUMBER / ELEMENT NUMBER	TASK STATEMENTS / DATA AND TASK ELEMENT STATEMENTS	OBJECTS	NO. OF OBJECTS
A1.4.1.13	EVALUATE FDE CHANGES FOR CLEARANCE PLANNING OR FUTURE ACTIONS		
	TASK TYPE: R/A COORD MEDIA: FREQUENCY: LOW CRITICALITY: MED (Continued)		
A1.4.1.13.2	EXTRACT _Flight_Data_Entry changes affecting controller planning	Flight_Data_Entry	1
A1.4.1.13.3	ASSESS _Flight_Data_Entry changes to determine impact on present or future control actions	Flight_Data_Entry	20
A1.4.1.14	DETERMINE PRIORITY OF CONTROL ACTIONS		
	TASK TYPE: A COORD MEDIA: FREQUENCY: HI CRITICALITY: HI		
A1.4.1.14.1	DECIDE the order in which control actions need to be implemented		
A1.4.1.15	PERCEIVE NEED FOR AMENDED CLEARANCE		
	TASK TYPE: R/A COORD MEDIA: FREQUENCY: HI CRITICALITY: HI		
A1.4.1.15.1	ACQUIRE _Position_Symbol, _Data_Block, _Weather_Descriptor, _Geographic_Map_Data on _Situation_Display for information pertaining to need for amended clearance A/O	Position_Symbol Data_Block Weather_Descriptor Geographic_Map_Data Situation_Display	30 27 1 1 1
A1.4.1.15.2	ACQUIRE _Flight_Data_Entry, _Time on _Flight_Data_Display for information pertaining to need for amended clearance	Flight_Data_Entry Time Flight_Data_Display	20 1 1
A1.4.1.15.3	SYNTHESIZE altitude, route, weather, and time information into a mental traffic picture with regard to need to amend clearance of one or more aircraft		
A1.4.1.15.4	COMPARE mental traffic picture with pilot's intentions and/ or planned control actions		
A1.4.1.15.5	RECOGNIZE need to amend aircraft clearance		
A1.4.1.16	FORMULATE CONTROLLER PLAN OF ACTION FOR CLEARANCE GENERATION		
	TASK TYPE: A COORD MEDIA: FREQUENCY: HI CRITICALITY: HI		
A1.4.1.16.1	DECIDE the requirements and restrictions necessary for composing a clearance based on available information		
A1.4.1.75	DETERMINE APPROPRIATE MENTAL PLAN FOR AIRCRAFT CLEARANCE		
	TASK TYPE: A COORD MEDIA: FREQUENCY: HI CRITICALITY: HI		
A1.4.1.75.1	SYNTHESIZE mental traffic picture to determine controller course of action		
A1.4.1.75.2	DECIDE the appropriate course of action for controller generated clearance		
A1.4.2.1	DECLARE EMERGENCY AND INVOKE CONTINGENCY PLAN		
	TASK TYPE: ERA/VC COORD MEDIA: V/M FREQUENCY: LOW CRITICALITY: EXT		
A1.4.2.1.1	DECIDE if an aircraft emergency exists by analyzing the mental traffic picture and known situation		

TASK NUMBER / ELEMENT NUMBER	TASK STATEMENTS / DATA AND TASK ELEMENT STATEMENTS	OBJECTS	NO. OF OBJECTS
A1.4.2.1	DECLARE EMERGENCY AND INVOKE CONTINGENCY PLAN		
	TASK TYPE: ERA/VC COORD MEDIA: V/M FREQUENCY: LOW CRITICALITY: EXT (Continued)		
A1.4.2.1.2	PERFORM VSCS, Initiating G/G Communications *inform supervisor and/ or other controller of decision*		
A1.4.2.1.3	CROSS-REFERENCE Contingency Plan Checklist *review checklist*		
A1.4.2.1.4	DECIDE on appropriate Contingency Plan *decide on plan of action for situation*		
A1.4.2.1.5	PERFORM VSCS, Initiating G/G Communications *notice of aircraft problem/ contingency plan* A/O		
A1.4.2.1.6	PERFORM TEM M.2, Sending ATC Mail *notice of aircraft problem/ contingency plan*		
A1.4.2.2	RECEIVE NOTICE OF PILOT OR AIRCRAFT HAVING A PROBLEM (E.G., OVERDUE, LOSS OF RADIO CONTACT)		
	TASK TYPE: R/VC COORD MEDIA: V/M FREQUENCY: LOW CRITICALITY: EXT		
A1.4.2.2.1	PERFORM TEM M.1, Receiving ATC Mail *notice of pilot or aircraft problem* O		
A1.4.2.2.2	PERFORM VSCS, Receiving G/G Communications *notice of pilot or aircraft problem* O		
A1.4.2.2.3	PERFORM VSCS, Communicating Normally Air-To-Ground *receive notice from pilot of aircraft problem*		
A1.4.2.3	ISSUE INSTRUCTIONS TO PILOT (NORDO) FOR IDENTIFICATION TURN/ TRANSPONDER RESPONSE		
	TASK TYPE: VC COORD MEDIA: V FREQUENCY: LOW CRITICALITY: HI		
A1.4.2.3.1	PERFORM VSCS, Communicating Normally Air-To-Ground *issuing instructions to aircraft with no transmitter*		
A1.4.2.4	DETECT A PILOT OR AIRCRAFT PROBLEM (E.G., HYPOXIA, EXCEPTION BEACON CODE)		
	TASK TYPE: R/A/VC COORD MEDIA: V FREQUENCY: LOW CRITICALITY: HI		
A1.4.2.4.1	SCAN _Full_Data_Block on _Situation_Display for _Exception_Beacon_Code or _Altitude_Nonconformance_Indicator for possible aircraft problem	Full_Data_Block Situation_Display Exception_Beacon_Code Altitude_Nonconformance_Indicator	15 1 1 1
A1.4.2.4.2	DETECT _Exception_Beacon_Code, _Altitude_Nonconformance_Indicator in the _Full_Data_Block on Situation Display	Exception_Beacon_Code Altitude_Nonconformance_Indicator Full_Data_Block	1 1 1
A1.4.2.4.3	PERFORM VSCS, Communicating Normally Air-To-Ground *detect erratic or abnormal pilot communication behavior*		
A1.4.2.4.4	INTEGRATE data received to make a decision as to whether a potential problem exists		

TASK NUMBER / ELEMENT NUMBER	TASK STATEMENTS / DATA AND TASK ELEMENT STATEMENTS	OBJECTS	NO. OF OBJECTS
A1.4.2.5	FORWARD CONTINGENCY INFORMATION TO SUPERVISOR/ ANOTHER CONTROLLER		
	TASK TYPE: E/VC COORD MEDIA: V/M FREQUENCY: LOW CRITICALITY: HI		
A1.4.2.5.1	PERFORM TEM M.2, Sending ATC MAIL *forwarding contingency information*		
	O		
A1.4.2.5.2	PERFORM VSCS, Initiating G/G Communications *forwarding contingency information*		
	O		
A1.4.2.5.3	INITIATE _Flight_Data_Amendment message *to note contingency information in remarks section of flight data entry*	Flight_Data_Amendment	1
A1.4.2.5.4	EXECUTE _Flight_Data_Amendment message *enter information concerning contingency action*	Flight_Data_Amendment	1
A1.4.2.5.5	DETECT system acceptance of _Flight_Data_Amendment message	Flight_Data_Amendment	1
A1.4.2.6	INFORM DESIGNATED PERSONNEL OF AIRCRAFT HAVING FLIGHT PROBLEMS		
	TASK TYPE: E/VC COORD MEDIA: V/M FREQUENCY: LOW CRITICALITY: HI		
A1.4.2.6.1	PERFORM TEM M.2, Sending ATC Mail *sending contingency information*		
	O		
A1.4.2.6.2	PERFORM TEM M.2, Initiating G/G Communications *sending contingency information*		
A1.4.2.7	REQUEST RELAY OF INSTRUCTIONS TO PILOT (NORDO) FOR IDENTIFICATION TURN/ TRANSPONDER RESPONSE		
	TASK TYPE: E/VC COORD MEDIA: V/M FREQUENCY: LOW CRITICALITY: MED		
A1.4.2.7.1	PERFORM TEM M.2, Sending ATC Mail *request another controller aid in attempting to contact a NORDO aircraft*		
	O		
A1.4.2.7.2	PERFORM VSCS, Initiating G/G Communications *requesting assistance from another controller or facility to attempt to issue instructions to pilot of NORDO aircraft		
	O		
A1.4.2.7.3	PERFORM VSCS, Communicating Normally Air-To-Ground *requesting a pilot to attempt to contact another pilot of a suspected NORDO aircraft*		
A1.4.2.8	CONDUCT SEARCH FOR AIRCRAFT WITHOUT RADIO CONTACT		
	TASK TYPE: E/A/VC COORD MEDIA: V/M FREQUENCY: LOW CRITICALITY: HI		
A1.4.2.8.1	DECIDE appropriate course of action for search		
A1.4.2.8.2	PERFORM VSCS, Initiating G/G Communications *requesting information on overdue aircraft from another controller or facility*		
	A/O		

TASK NUMBER / ELEMENT NUMBER	TASK STATEMENTS / DATA AND TASK ELEMENT STATEMENTS	OBJECTS	NO. OF OBJECTS
A1 4 2 8	CONDUCT SEARCH FOR AIRCRAFT WITHOUT RADIO CONTACT		
	TASK TYPE: E/A/VC COORD MEDIA: V/M FREQUENCY: LOW CRITICALITY: HI (Continued)		
A1.4.2 8.3	PERFORM TEM M.2, Sending ATC Mail *requesting information on NORDO aircraft*		
	A/O		
A1 4 2 8.4	PERFORM VSCS, Communicating Normally Air-To-Ground *attempt to contact NORDO aircraft*		
A1.4.2 8.5	PERFORM VSCS, Initiating Backup A/G communications *to set up emergency frequency*		
	A/O		
A1 4.2 8 6	PERFORM VSCS, Adjusting Communication Display/ Receiving Modes *adjusting selection of main/ standby transmitter/ receiver equipment*		
A1 4.2 9	OBSERVE AIRCRAFT TURN/ TRANSPONDER RESPONSE FOLLOWING IDENTIFICATION REQUEST		
	TASK TYPE: R/A COORD MEDIA: FREQUENCY: MED CRITICALITY: HI		
A1 4 2 9.1	SEARCH _Position_Symbol, _Data_Block on _Situation_Display for aircraft turn or transponder response to instructions by an ATC facility	Position_Symbol Data_Block Situation_Display	1 1 1
A1 4.2 9 2	RECOGNIZE movement of _Target_Position_Symbol, _Position_History, _Track_Vector on Situation Display in response to instructions issued from an ATC facility	Target_Position_Symbol Position_History Track_Vector	1 1 1
	A/O		
A1 4 2 9 3	DETECT appropriate _Beacon_Code in _Target_Position_Symbol of the aircraft in question	Beacon_Code Target_Position_Symbol	1 1
	A/O		
A1 4 2 9 4	DETECT _Ident_Indicator in _Target_Position_Symbol of aircraft in question	Ident_Indicator Target_Position_Symbol	1 1
A1 4.2 10	CONDUCT RADIO/ RADAR SEARCH FOR OVERDUE AIRCRAFT		
	TASK TYPE: R/A/VC COORD MEDIA: V/M FREQUENCY: LOW CRITICALITY: HI		
A1 4 2 10 1	DECIDE appropriate course of action for search		
A1.4 2 10 2	SCAN _Position_Symbol, _Data_Block, _Background_Descriptor on _Situation_Display *transponder code change, ident, or change of heading in response to ATC clearance*	Position_Symbol Data_Block Background_Descriptor Situation_Display	30 27 1 1
	A/O		
A1 4.2 10 3	PERFORM VSCS, Communicating Normally Air-To-Ground *attempting to contact overdue aircraft or requesting another aircraft to attempt to contact the overdue aircraft*		
	O		
A1 4 2 10 4	PERFORM VSCS, Initiating G/G Communications *instructing a Flight Service Station to attempt to contact an overdue aircraft*		
	O		

TASK NUMBER / ELEMENT NUMBER	TASK STATEMENTS / DATA AND TASK ELEMENT STATEMENTS	OBJECTS	NO. OF OBJECTS
A1.4.2.10	CONDUCT RADIO/ RADAR SEARCH FOR OVERDUE AIRCRAFT		
	TASK TYPE: R/A/VC COORD MEDIA: V/M FREQUENCY: LOW CRITICALITY: HI (Continued)		
A1.4.2.10.5	PERFORM VSCS, Ensuring Guard Air-To-Ground Communications *monitor emergency frequencies*		
A1.4.2.11	RECEIVE SUPERVISOR NOTICE OF EMERGENCY DECLARED AND CONTINGENCY PLAN INVOKED		
	TASK TYPE: R/VC COORD MEDIA: V/M FREQUENCY: LOW CRITICALITY: EXT		
A1.4.2.11.1	PERFORM VSCS, Receiving G/G Communications *information on emergency declaration and contingency plan*		
	O		
A1.4.2.11.2	PERFORM TEM M.1, Receiving ATC Mail *regarding emergency declaration and contingency plan*		
A1.4.2.12	RECEIVE SUPERVISOR NOTICE TO CONDUCT COMMUNICATIONS SEARCH FOR OVERDUE/ NORDO AIRCRAFT		
	TASK TYPE: R/VC COORD MEDIA: V FREQUENCY: LOW CRITICALITY: HI		
A1.4.2.12.1	PERFORM VSCS, Receiving G/G Communications *notice from supervisor to conduct communications search for overdue aircraft*		
	O		
A1.4.2.12.2	PERFORM TEM M.1, Receiving ATC Mail *notice from supervisor to conduct communications search for overdue aircraft*		
A1.4.2.13	RECEIVE NOTICE THAT SUPERVISOR WILL CONDUCT COMMUNICATIONS SEARCH FOR OVERDUE/ NORDO AIRCRAFT		
	TASK TYPE: R/VC COORD MEDIA: V FREQUENCY: LOW CRITICALITY: MED		
A1.4.2.13.1	PERFORM VSCS, Receiving G/G Communications *notice that supervisor will conduct a communications search for overdue aircraft*		
	O		
A1.4.2.13.2	PERFORM TEM M.1, Receiving ATC Mail *notice that supervisor will conduct communications search for overdue aircraft*		
A1.4.2.14	RECEIVE PILOT NOTICE OF EMERGENCY DECLARED		
	TASK TYPE: R/VC COORD MEDIA: V FREQUENCY: LOW CRITICALITY: EXT		
A1.4.2.14.1	PERFORM VSCS, Communicating Normally Air-To-Ground *pilot declares emergency*		
	O		
A1.4.2.14.2	SEARCH _Target_Position_Symbol, _Full_Data_Block on _Situation_Display for _Beacon_Code *notice of aircraft emergency*	Target_Position_Symbol Full_Data_Block Situation_Display Beacon_Code	30 1 1 1
A1.4.2.14.3	DETECT _Exception_Beacon_Code, _Aircraft_Special_Condition *notice of an emergency or radio failure beacon code*	Exception_Beacon_Code Aircraft_Special_Condition	1 1

TASK NUMBER / ELEMENT NUMBER	TASK STATEMENTS / DATA AND TASK ELEMENT STATEMENTS	OBJECTS	NO. OF OBJECTS
A1.4.3.1	PERCEIVE PRESENCE OF SPECIAL OPERATION		
	TASK TYPE: R/A COORD MEDIA: FREQUENCY: LOW CRITICALITY: HI		
A1.4.3.1.1	ACQUIRE _Full_Data_Block on _Situation_Display for special operations aircraft *special aircraft callsign which alerts controller to use special procedures*	Full_Data_Block Situation_Display	27 1
	A/O		
A1.4.3.1.2	ACQUIRE _Flight_Data_Entry on _Flight_Data_Display for special operations aircraft	Flight_Data_Entry Flight_Data_Display	20 1
	A/O		
A1.4.3.1.3	ACQUIRE _Special_Use_Airspace_Status, _Special_Activity on _System_Status_Data_Display for special operation	Special_Use_Airspace_Status Special_Activity System_Status_Data_Display	1 1 1
A1.4.3.1.4	RECOGNIZE _Target_Postion_Symbol associated with special operation	Target_Postion_Symbol	1
A1.4.3.2	RECEIVE REVIEW/ NOTICE OF SPECIAL OPERATION		
	TASK TYPE: R/VC COORD MEDIA: V/M FREQUENCY: LOW CRITICALITY: MED		
A1.4.3.2.1	PERFORM TEM M.1, Receiving ATC Mail *receiving briefing on or notice of special operation*		
	O		
A1.4.3.2.2	PERFORM VSCS, Receiving G/G Communications *receiving information on special operation*		
A1.4.3.3	FORWARD NOTICE OF SPECIAL OPERATIONS TO ANOTHER CONTROLLER/ SUPERVISOR		
	TASK TYPE: E/VC COORD MEDIA: V/M FREQUENCY: LOW CRITICALITY: MED		
A1.4.3.3.1	PERFORM TEM M.2, Sending ATC Mail *forward information regarding special operation*		
	O		
A1.4.3.3.2	PERFORM VSCS, Initiating G/G Communications *notifying other personnel of special operation*		
A1.4.4.1	OBSERVE NEW FLIGHT PLAN POSTING		
	TASK TYPE: P COORD MEDIA: FREQUENCY: MED CRITICALITY: MED		
A1.4.4.1.1	ACQUIRE _Flight_Data_Entry on the _Flight_Data_Display *for new flight data*	Flight_Data_Entry Flight_Data_Display	20 1
A1.4.4.2	REVIEW FLIGHT PLAN FOR COMPLETENESS		
	TASK TYPE: R/A COORD MEDIA: FREQUENCY: LOW CRITICALITY: MED		
A1.4.4.2.1	SEARCH _Flight_Data_Entry on _Flight_Data_Display to ensure that appropriate fields are present	Flight_Data_Entry Flight_Data_Display	1 1
A1.4.4.2.2	ASSESS _Flight_Data_Entry completeness	Flight_Data_Entry	1

TASK NUMBER / ELEMENT NUMBER	TASK STATEMENTS / DATA AND TASK ELEMENT STATEMENTS	OBJECTS	NO. OF OBJECTS
A1.4.4.2	REVIEW FLIGHT PLAN FOR COMPLETENESS		
	TASK TYPE: R/A COORD MEDIA: FREQUENCY: LOW CRITICALITY: MED (Continued)		
A1.4.4.2.3	DECIDE what data are missing from _Flight_Data_Entry *after scaning each field to determine if necessary information is available*	Flight_Data_Entry	1
A1.4.4.3	ENTER FLIGHT PLAN		
	TASK TYPE: E COORD MEDIA: FREQUENCY: LOW CRITICALITY: LOW		
A1.4.4.3.1	INITIATE _Flight_Plan message for input of flight plan data	Flight_Plan	1
A1.4.4.3.2	EXECUTE _Flight_Plan message	Flight_Plan	1
A1.4.4.3.3	DETECT system acceptance of IFR flight plan		
A1.4.4.4	ACKNOWLEDGE NEW FLIGHT PLAN RECEIPT		
	TASK TYPE: E COORD MEDIA: FREQUENCY: LOW CRITICALITY: LOW		
A1.4.4.4.1	INITIATE _Acknowledge_Flight_Data_Entry _Posting message to acknowledge receipt of a new flight data entry	Acknowledge_Flight_Data_Entry_Posting	1
A1.4.4.4.2	EXECUTE _Acknowledge_Flight_Data_Entry_ Posting message	Acknowledge_Flight_Data_Entry_Posting	1
A1.4.4.4.3	DETECT system acceptance of _Acknowledge_Flight_Data_Entry_Posting message *deemphasis of data*	Acknowledge_Flight_Data_Entry_Posting	1
A1.4.4.5	REVIEW FLIGHT PLAN FOR ERRORS/ DATA LIST SEQUENCE		
	TASK TYPE: R/A COORD MEDIA: FREQUENCY: LOW CRITICALITY: LOW		
A1.4.4.5.1	SEARCH _Flight_Data_Entry on _Flight_Data_Display for errors and appropriate sequence in data list	Flight_Data_Entry Flight_Data_Display	1 1
A1.4.4.5.2	ASSESS correctness of information in _Flight_Data_Entry	Flight_Data_Entry	1
A1.4.4.5.3	DECIDE what data are incorrect in _Flight_Data_Entry *after scanning each field to determine correctness of information available* A/O	Flight_Data_Entry	1
A1.4.4.5.4	DECIDE if _Flight_Data_Entry is in the proper position in the data list on the _Flight_Data_Display	Flight_Data_Entry Flight_Data_Display	1 1
A1.4.4.6	RECEIVE FLIGHT PLAN FROM PILOT		
	TASK TYPE: VC COORD MEDIA: V FREQUENCY: LOW CRITICALITY: LOW		
A1.4.4.6.1	PERFORM VSCS, Communicating Normally Air-To-Ground *receive flight plan from pilot*		
A1.4.4.7	RECEIVE FLIGHT PLAN VERBALLY FORWARDED		
	TASK TYPE: VC COORD MEDIA: V FREQUENCY: LOW CRITICALITY: LOW		
A1.4.4.7.1	PERFORM VSCS, Receiving G/C Communications *receiving flight plan information*		

TASK NUMBER / ELEMENT NUMBER	TASK STATEMENTS / DATA AND TASK ELEMENT STATEMENTS	OBJECTS	NO. OF OBJECTS
A1.4.4.8	QUERY PILOT ABOUT FLIGHT PLAN		
	TASK TYPE: VC COORD MEDIA: V FREQUENCY: LOW CRITICALITY: MED		
A1.4.4.8.1	PERFORM VSCS, Communicating Normally Air-To-Ground *question pilot regarding filed flight plan*		
A1.4.4.9	QUERY THE RELAYER OF A FLIGHT PLAN		
	TASK TYPE: E/VC COORD MEDIA: V/M FREQUENCY: LOW CRITICALITY: MED		
A1.4.4.9.1	PERFORM TEM M.2, Sending ATC Mail *informing of error/ validation*		
A1.4.4.9.2	PERFORM TEM M.1, Receiving ATC Mail *flight plan error/ validation*		
A1.4.4.9.3	PERFORM VSCS, Initiating G/G Communications *informing of error or need for validation*		
A1.4.4.9.4	PERFORM VSCS, Receiving G/G Communications *flight plan error/ validation*		
A1.4 4.10	FORWARD FLIGHT PLAN VERBALLY		
	TASK TYPE: VC COORD MEDIA: V FREQUENCY: LOW CRITICALITY: MED		
A1.4.4.10.1	PERFORM VSCS, Initiating G/G Communications *forwarding flight plan to another controller*		
A1.4.4.11	ENTER STEREO FLIGHT PLAN		
	TASK TYPE: E COORD MEDIA: FREQUENCY: LOW CRITICALITY: LOW		
A1.4.4.11.1	INITIATE _Stereo_Flight_Plan message for input of stereo flight plan	Stereo_Flight_Plan	1
A1.4.4.11.2	EXECUTE _Stereo_Flight_Plan message	Stereo_Flight_Plan	1
A1.4.4.11.3	DETECT system acceptance of stereo flight plan		
A1.4.4.12	ENTER VFR FLIGHT PLAN		
	TASK TYPE: E COORD MEDIA: FREQUENCY: LOW CRITICALITY: LOW		
A1.4.4.12.1	INITIATE _VFR_Flight_Plan message for input of VFR flight plan	VFR_Flight_Plan	1
A1.4.4.12.2	EXECUTE _VFR_Flight_Plan message	VFR_Flight_Plan	1
A1.4.4.12.3	DETECT system acceptance of VFR flight plan		
A1.4.4.13	REQUEST FLIGHT PLAN READOUT		
	TASK TYPE: E COORD MEDIA: FREQUENCY: LOW CRITICALITY: LOW		
A1.4.4.13.1	INITIATE _Request_Flight_Data_Readout message	Request_Flight_Data_Readout	1

TASK NUMBER / ELEMENT NUMBER	TASK STATEMENTS / DATA AND TASK ELEMENT STATEMENTS	OBJECTS	NO. OF OBJECTS
A1.4.4.13	REQUEST FLIGHT PLAN READOUT		
	TASK TYPE: E COORD MEDIA: FREQUENCY: LOW CRITICALITY: LOW (Continued)		
A1.4.4.13.2	EXECUTE _Flight_Data_Readout message	Flight_Data_Readout	1
A1.4.4.13.3	DETECT appearance of _Flight_Data_Readout in _Flight_Data_Readout_Area	Flight_Data_Readout Flight_Data_Readout_Area	1 1
A1.4.4.13.4	INITIATE _Query_Data_Base_For_Selected_Readout *flight plan*	Query_Data_Base_For_Selected_Readout	1
A1.4.4.13.5	EXECUTE _Query_Data_Base_For_Selected_Readout *flight plan*	Query_Data_Base_For_Selected_Readout	1
A1.4.4.13.6	DETECT Flight Plan readout on _System_Query_Response of _Response_Display	System_Query_Response Response_Display	1 1
A1.4.4.14	ENTER SCRATCH PAD DATA IN FULL DATA BLOCK		
	TASK TYPE: E COORD MEDIA: FREQUENCY: MED CRITICALITY: MED		
A1.4.4.14.1	INITIATE _Enter_Scratch_Pad_Data message	Enter_Scratch_Pad_Data	1
A1.4.4.14.2	EXECUTE _Enter_Scratch_Pad_Data message	Enter_Scratch_Pad_Data	1
A1.4.4.14.3	DETECT system acceptance of _Enter_Scratch_Pad_Data message	Enter_Scratch_Pad_Data	1
A1.4.5.1	RECEIVE FLIGHT DATA REVISION		
	TASK TYPE: R COORD MEDIA: FREQUENCY: LOW CRITICALITY: HI		
A1.4.5.1.1	ACQUIRE _Flight_Data_Entry on _Flight_Data_Display for emphasized flight data revisions *option 1*	Flight_Data_Entry Flight_Data_Display	20 1
A1.4.5.1.2	ACQUIRE _Flight_Data_Entry on _Flight_Data_Display for emphasized flight data revisions *option 2*	Flight_Data_Entry Flight_Data_Display	20 1
A1.4.5.1.3	*INITIATE _Acknowledge_FDE_Change message *deemphasize new data*	Acknowledge_FDE_Change	1
A1.4.5.1.4	*EXECUTE _Acknowledge_FDE_Change message	Acknowledge_FDE_Change	1
A1.4.5.1.5	*DETECT deemphasized field in _Flight_Data_Entry in _Flight_Data_Area	Flight_Data_Entry Flight_Data_Area	1 1
A1.4.5.1.6	ACQUIRE _Flight_Data_Readout_Area on _Flight_Data_Display for emphasized field in _Flight_Data_Entry	Flight_Data_Readout_Area Flight_Data_Display Flight_Data_Entry	1 1 1
A1.4.5.1.7	COMPARE new data in _Flight_Data_Entry in _Flight_Data_Readout_Area to old data in _Flight_Data_Area on _Flight_Data_Display	Flight_Data_Entry Flight_Data_Readout_Area Flight_Data_Area Flight_Data_Display	1 1 1 1
A1.4.5.1.8	*INITIATE _Acknowledge_FDE_Change *display new data in Flight Data Area*	Acknowledge_FDE_Change	1
A1.4.5.1.9	*EXECUTE _Acknowledge_FDE_Change	Acknowledge_FDE_Change	1

TASK NUMBER / ELEMENT NUMBER	TASK STATEMENTS / DATA AND TASK ELEMENT STATEMENTS	OBJECTS	NO. OF OBJECTS
A1.4.5.1	RECEIVE FLIGHT DATA REVISION		
	TASK TYPE: R COORD MEDIA: FREQUENCY: LOW CRITICALITY: HI (Continued)		
A1.4.5.1.10	*DETECT replacement of old field data with new field data in _Flight_Data_Entry of _Flight_Data_Area and the absence of flight data in _Flight_Data_Readout_Area	Flight_Data_Entry Flight_Data_Area Flight_Data_Readout_Area	1 1 1
A1.4.5.2	EMPHASIZE FLIGHT DATA ENTRY POSTING FOR REMINDER ACTION		
	TASK TYPE: E COORD MEDIA: FREQUENCY: LOW CRITICALITY: MED		
A1.4.5.2.1	INITIATE _Flight_Data_Entry_And_Data_Field_Emphasis message for emphasis of data contained in flight data entry	Flight_Data_Entry_And_Data_Field_Emphasis	1
A1.4.5.2.2	EXECUTE _FDE_And_Data_Field_Emphasis message	FDE_And_Data_Field_Emphasis	1
A1.4.5.2.3	DETECT emphasized field in the _Flight_Data_Entry on the Flight Data Display	Flight_Data_Entry	1
A1.4.5.3	ENTER FLIGHT PLAN AMENDMENT		
	TASK TYPE: E COORD MEDIA: FREQUENCY: MED CRITICALITY: HI		
A1.4.5.3.1	INITIATE _Flight_Data_Amendment *for amendment of data contained in flight data entry*	Flight_Data_Amendment	1
A1.4.5.3.2	EXECUTE _Flight_Data_Amendment message	Flight_Data_Amendment	1
A1.4.5.3.3	DETECT appropriately modified data in _Flight_Data_Entry on _Flight_Data_Display	Flight_Data_Entry Flight_Data_Display	1 1
A1.4.5.4	ENTER PILOT'S POSITION REPORT IN SYSTEM		
	TASK TYPE: E COORD MEDIA: FREQUENCY: LOW CRITICALITY: MED		
A1.4.5.4.1	INITIATE _Progress_Report Message *for input of flight position report*	Progress_Report	1
A1.4.5.4.2	EXECUTE _Progress_Report message	Progress_Report	1
A1.4.5.4.3	DETECT system acceptance of the _Progress_Report message by observing the appropriate data field in the _Flight_Data_Entry on the Flight Data Display	Progress_Report Flight_Data_Entry	1 1
A1.4.5.5	DELETE FLIGHT DATA ENTRY EMPHASIS		
	TASK TYPE: E COORD MEDIA: FREQUENCY: LOW CRITICALITY: LOW		
A1.4.5.5.1	INITIATE _FDE_And_Data_Field_Emphasis message for deselection of emphasisized data field in _Flight_Data_Entry on Flight Data Display	FDE_And_Data_Field_Emphasis Flight_Data_Entry	1 1
A1.4.5.5.2	EXECUTE _Flight_Data_Entry_And_Data_Field_Emphasis message	Flight_Data_Entry_And_Data_Field_Emphasis	1

TASK NUMBER / ELEMENT NUMBER	TASK STATEMENTS / DATA AND TASK ELEMENT STATEMENTS	OBJECTS	NO. OF OBJECTS
A1.4.5.5	DELETE FLIGHT DATA ENTRY EMPHASIS		
	TASK TYPE: E COORD MEDIA: FREQUENCY: LOW CRITICALITY: LOW (Continued)		
A1.4.5.5.3	RECOGNIZE removal of flight data emphasis in the _Flight_Data_entry on the _Flight_Data_Display	Flight_Data_entry Flight_Data_Display	1 1
A1.4.5.6	RECEIVE FLIGHT PLAN AMENDMENT VERBALLY FORWARDED		
	TASK TYPE: VC COORD MEDIA: V FREQUENCY: LOW CRITICALITY: MED		
A1.4.5.6.1	PERFORM VSCS, Receiving G/G Communications *receive flight plan amendment*		
A1.4.5.7	RECEIVE PILOT'S POSITION REPORT		
	TASK TYPE: VC COORD MEDIA: V FREQUENCY: LOW CRITICALITY: HI		
A1.4.5.7.1	PERFORM VSCS, Communicating Normally Air-To-Ground *receiving a position report from pilot*		
A1.4.5.8	FORWARD FLIGHT PLAN AMENDMENT VERBALLY		
	TASK TYPE: VC COORD MEDIA: V FREQUENCY: LOW CRITICALITY: MED		
A1.4.5.8.1	PERFORM VSCS, Initiating G/G Communications *forwarding flight plan amendment data to another controller*		
A1.4.5.9	INFORM CONTROLLER UNABLE FLIGHT PLAN AMENDMENT		
	TASK TYPE: E/VC COORD MEDIA: V/M FREQUENCY: LOW CRITICALITY: MED		
A1.4.5.9.1	PERFORM TEM M.2, Sending ATC Mail *advising a controller unable to accept flight plan amendment*		
	O		
A1.4.5.9.2	PERFORM VSCS, Initiating G/G Communications *advising controller of unable to accept flight plan amendment*		
A1.4.5.10	RECEIVE CONTROLLER ADVICE OF UNABLE FLIGHT PLAN AMENDMENT		
	TASK TYPE: R/VC COORD MEDIA: V/M FREQUENCY: LOW CRITICALITY: HI		
A1.4.5.10.1	PERFORM TEM M.1, Receiving ATC Mail *receive notice from another controller of unable to accept flight plan amendment*		
	O		
A1.4.5.10.2	PERFORM VSCS, Receiving G/G Communications *receive information of unable to accept amendment message*		
A1.4.5.11	RECEIVE REQUESTED FLIGHT PLAN CHANGES		
	TASK TYPE. R/VC COORD MEDIA: V/M FREQUENCY: LOW CRITICALITY: MED		
A1.4.5.11.1	PERFORM TEM M.1, Receiving ATC Mail *receive request for flight plan changes*		
	O		
A1.4.5.11.2	PERFORM VSCS, Receiving G/G Communications *receive request for flight plan changes*		
	O		

TASK NUMBER / ELEMENT NUMBER	TASK STATEMENTS / DATA AND TASK ELEMENT STATEMENTS	OBJECTS	NO. OF OBJECTS
A1.4.5.11	RECEIVE REQUESTED FLIGHT PLAN CHANGES		
	TASK TYPE: R/VC COORD MEDIA: V/M FREQUENCY: LOW CRITICALITY: MED (Continued)		
A1.4.5.11.3	PERFORM VSCS, Communicating Normally Air-To-Ground *receive a request for flight plan changes from a pilot*		
A1.4.6.1	RECEIVE HANDOFF REQUEST		
	TASK TYPE: R/VC COORD MEDIA: V/F FREQUENCY: LOW CRITICALITY: HI		
A1.4.6.1.1	SEARCH _Track_Position_Symbol, _Leader_Line, or _Data_Block for indication of handoff directed to sector	Track_Position_Symbol Leader_Line Data_Block	30 27 27
A1.4.6.1.2	DETECT _Handoff_Status/Indicator in _Full_Data_Block, _Partial_Data_Block, _Leader_Line, Track_Position_Symbol on Situation Display	Handoff_Status/Indicator Full_Data_Block Partial_Data_Block Leader_Line Track_Position_Symbol	1 15 7 27 30
A1.4.6.1.3	EXTRACT _Initiating_Sector/Position_Identification from _Full_Data_Block, _Leader_Line, or _Track_Position_Symbol on the Situation Display	Initiating_Sector/Position_Identification Full_Data_Block Leader_Line Track_Position_Symbol	1 15 27 30
A1.4.6.1.4	PERFORM VSCS, Receiving G/G Communications *handoff request*		
A1.4.6.2	DENY HANDOFF		
	TASK TYPE: E/VC COORD MEDIA: V/F FREQUENCY: LOW CRITICALITY: HI		
A1.4.6.2.1	INITIATE _Reject_Handoff message *to indicate the non-acceptance of a handoff*	Reject_Handoff	1
A1.4.6.2.2	EXECUTE _Reject_Handoff message	Reject_Handoff	1
A1.4.6.2.3	DETECT system acceptance of _Reject_Handoff message	Reject_Handoff	1
A1.4.6.2.4	PERFORM VSCS, Initiating G/G Communications *advising of handoff rejection*		
A1.4.6.3	ACCEPT VERBAL HANDOFF/ INITIATE MANUAL TRACK START		
	TASK TYPE: E/R/VC COORD MEDIA: V FREQUENCY: LOW CRITICALITY: HI		
A1.4.6.3.1	PERFORM VSCS, Receiving G/G Communications *accepting verbal handoff*		
A1.4.6.3.2	INITIATE _Track message *start*	Track	1
A1.4.6.3.3	EXECUTE _Track message	Track	1
A1.4.6.3.4	DETECT _Track_Position_Symbol and associated _Full_Data_Block on _Situation_Display *results of track start message*	Track_Position_Symbol Full_Data_Block Situation_Display	1 1 1
A1.4.6.4	ACCEPT AUTOMATIC HANDOFF		
	TASK TYPE: E COORD MEDIA: F FREQUENCY: HI CRITICALITY: HI		
A1.4.6.4.1	INITIATE _Accept_Handoff message for acceptance of handoff	Accept_Handoff	1

TASK NUMBER / ELEMENT NUMBER	TASK STATEMENTS / DATA AND TASK ELEMENT STATEMENTS	OBJECTS	NO. OF OBJECTS
A1.4.6.4	ACCEPT AUTOMATIC HANDOFF		
	TASK TYPE: E COORD MEDIA: F FREQUENCY: HI CRITICALITY: HI (Continued)		
A1.4.6.4.2	EXECUTE _Accept_Handoff Message	Accept_Handoff	1
A1.4.6.4.3	DETECT appearance of _Accepted status in _Handoff_Status/Indicator of _Full_Data_Block, _Leader_Line, or _Track_Position_Symbol on _Situation_Display	Accepted Handoff_Status/Indicator Full_Data_Block Leader_Line Track_Position_Symbol Situation_Display	1 1 1 1 1 1
A1.4.6.5	DETERMINE THAT AIRCRAFT IS ENTERING SECTOR		
	TASK TYPE: A COORD MEDIA: FREQUENCY: HI CRITICALITY: HI		
A1.4.6.5.1	ACQUIRE _Geographic_Map_Data and _Background_Descriptor on _Situation_Display for information that may aid in determining if aircraft is entering sector A/O	Geographic_Map_Data Background_Descriptor Situation_Display	1 1 1
A1.4.6.5.2	ACQUIRE _Static_Information_Display for information that may aid in determining if aircraft is entering sector A/O	Static_Information_Display	1
A1.4.6.5.3	ACQUIRE _Flight_Data_Entry, _Time on _Flight_Data_Display *for flight data entry of aircraft potentially entering sector*	Flight_Data_Entry Time Flight_Data_Display	20 1 1
A1.4.6.5.4	SYNTHESIZE last known position, time at last known position, speed, route, and current time and map data into a mental picture of aircraft position		
A1.4.6.5.5	PROJECT mental picture of aircraft position with respect to location of sector boundary		
A1.4.6.5.6	RECOGNIZE aircraft is entering sector airspace		
A1 4.6.6	DETERMINE RESPONSE TO HANDOFF REQUEST		
	TASK TYPE: R/A COORD MEDIA: FREQUENCY: HI CRITICALITY: HI		
A1.4.6.6.1	SCEARCH _Position_Symbol, _Full_Data_Block, _Background_Descriptor on _Situation_Display to determine response to a Handoff Request A/O	Position_Symbol Full_Data_Block Background_Descriptor Situation_Display	30 15 1 1
A1.4.6.6.2	SEARCH _Flight_Data_Entry, _Time on _Flight_Data_Display for information concerning whether or not to accept handoff	Flight_Data_Entry Time Flight_Data_Display	20 1 1
A1.4.6.6.3	SYNTHESIZE altitude, speed, route and time information into a mental traffic picture with regard to accepting handoff		
A1.4.6.6.4	DECIDE whether or not to accept handoff based on mental traffic picture		
A1.4.6.7	RECEIVE CONTROL OF AIRCRAFT		
	TASK TYPE: R/VC COORD MEDIA: V/M FREQUENCY: LOW CRITICALITY: HI		
A1.4.6.7.1	PERFORM VSCS, Receiving G/G Communications *release of control from another controller/ facility* O		

TASK NUMBER / ELEMENT NUMBER	TASK STATEMENTS / DATA AND TASK ELEMENT STATEMENTS	OBJECTS	NO. OF OBJECTS
A1.4.6.7	RECEIVE CONTROL OF AIRCRAFT		
	TASK TYPE: R/VC COORD MEDIA: V/M FREQUENCY: LOW CRITICALITY: HI (Continued)		
A1.4.6.7.2	PERFORM TEM M.1, Receiving ATC Mail *release of control from another controller/ facility*		
A1.4.6.8	REQUEST TRANSFER OF CONTROL		
	TASK TYPE: E/VC COORD MEDIA: V/M FREQUENCY: LOW CRITICALITY: HI		
A1.4.6.8.1	PERFORM TEM M.2, Sending ATC Mail *requesting control of an aircraft* C		
A1.4.6.8.2	PERFORM VSCS, Initiating G/G Communications *action to request control of aircraft*		
A1.4.7.1	INITIATE HANDOFF FUNCTION		
	TASK TYPE: E COORD MEDIA: F FREQUENCY: LOW CRITICALITY: HI		
A1.4.7.1.1	INITIATE _Initiate_Handoff message to start handoff action to another sector or facility	Initiate_Handoff	1
A1.4.7.1.2	EXECUTE _Initiate_Handoff message	Initiate_Handoff	1
A1.4.7.1.3	DETECT acceptance of the _Initiate_Handoff message by observing the _Handoff_Status/Indicator in the Full Data Block	Initiate_Handoff Handoff_Status/Indicator	1 1
A1.4.7.2	OBSERVE AUTOMATIC INITIATION OF HANDOFF		
	TASK TYPE: R/A COORD MEDIA: FREQUENCY: HI CRITICALITY: HI		
A1.4.7.2.1	ACQUIRE _Handoff_Status/Indicator in the _Full_Data_Block and/or _Handoff_Indicator in _Leader_Line or _Track_Position_Symbol	Handoff_Status/Indicator Full_Data_Block Handoff_Indicator Leader_Line Track_Position_Symbol	1 1 1 1 1
A1.4.7.3	RETRACT HANDOFF		
	TASK TYPE: E/VC COORD MEDIA: V/F FREQUENCY: LOW CRITICALITY: HI		
A1.4.7.3.1	INITIATE _Retract_Handoff message to recall a previously initiated handoff	Retract_Handoff	1
A1.4.7.3.2	EXECUTE _Retract_Handoff message	Retract_Handoff	1
A1.4.7.3.3	DETECT system acceptance of the _Retract_Handoff message by observing the removal of _Handoff_Alert_Status_Ind icator in the _Full_Data_Block O	Retract_Handoff Handoff_Alert_Status_Indicator Full_Data_Block	1 1 1
A1.4.7.3.4	PERFORM VSCS, Initiating G/G Communications *handoffretraction*		
A1.4.7.4	RECEIVE HANDOFF ACCEPTANCE		
	TASK TYPE: R/VC COORD MEDIA: V/F FREQUENCY: HI CRITICALITY: HI		
A1.4.7.4.1	SEARCH for _Handoff_Status/Indicator in the _Full_Data_Block on Situation Display	Handoff_Status/Indicator Full_Data_Block	1 1

TASK NUMBER / ELEMENT NUMBER	TASK STATEMENTS / DATA AND TASK ELEMENT STATEMENTS	OBJECTS	NO. OF OBJECTS
A1.4.7.4	RECEIVE HANDOFF ACCEPTANCE		
	TASK TYPE: R/VC COORD MEDIA: V/F FREQUENCY: HI CRITICALITY: HI (Continued)		
A1.4.7.4.2	RECOGNIZE _Accepted status indication in the _Handoff_Status/Indicator field of the Full Data Block that the handoff was accepted	Accepted Handoff_Status/Indicator	1 1
	0		
A1.4.7.4.3	PERFORM VSCS, Receiving G/G Communications *handoff acceptance*		
A1.4.7.5	DISCUSS TRANSFER OF CONTROL WITH OTHER CONTROLLER		
	TASK TYPE: VC COORD MEDIA: V FREQUENCY: LOW CRITICALITY: HI		
A1.4.7.5.1	PERFORM VSCS, Initiating G/G Communications *forwarding information concerning transfer of control of an aircraft*		
	A		
A1.4.7.5.2	PERFORM VSCS, Receiving G/G Communications *information on transfer of control		
A1.4.7.6	INITIATE VERBAL HANDOFF		
	TASK TYPE: VC COORD MEDIA: V FREQUENCY: LOW CRITICALITY: HI		
A1.4.7.6.1	PERFORM VSCS, Initiating G/G Communications *notice of handoff to adjacent sector or facility*		
A1.4.7.7	RECEIVE REQUEST FOR TRANSFER OF CONTROL		
	TASK TYPE: R/VC COORD MEDIA: V/M FREQUENCY: LOW CRITICALITY: HI		
A1.4.7.7.1	PERFORM VSCS, Receiving G/G communications *receive request for transfer of control of aircraft*		
	0		
A1.4.7.7.2	PERFORM TEM M.1, Receiving ATC Mail *receive a request for transfer of control of an aircraft*		
A1.4.7.8	DETERMINE THAT AIRCRAFT IS LEAVING SECTOR		
	TASK TYPE: R/A COORD MEDIA: FREQUENCY: HI CRITICALITY: HI		
A1.4.7.8.1	ACQUIRE _Geographic_Map_Data, _Background_Descriptor, and _Target_Position_Symbol on _Situation_Display for information to determine if aircraft is leaving sector	Geographic_Map_Data Background_Descriptor Target_Position_Symbol Situation_Display	1 1 1 1
	A/O		
A1.4.7.8.2	ACQUIRE _Static_Information_Display for aeronautical chart data that may aid in determining if aircraft is leaving sector	Static_Information_Display	1
	A/O		
A1.4.7.8.3	SEARCH _Flight_Data_Entry, _Time on _Flight_Data_Display *for Flight Data of aircraft potentially leaving sector*	Flight_Data_Entry Time Flight_Data_Display	20 1 1
A1.4.7.8.4	SYNTHESIZE last known position, time at last known position, speed, route, and current time and map data into a mental picture of aircraft position		

TASK NUMBER / ELEMENT NUMBER	TASK STATEMENTS / DATA AND TASK ELEMENT STATEMENTS	OBJECTS	NO. OF OBJECTS
A1.4.7.8	DETERMINE THAT AIRCRAFT IS LEAVING SECTOR		
	TASK TYPE: R/A COORD MEDIA: FREQUENCY: HI CRITICALITY: HI (Continued)		
A1.4.7.8.5	PROJECT mental picture of aircraft position with respect to location of sector boundary		
A1.4.7.8.6	RECOGNIZE aircraft is leaving sector airspace		
A1.4.7.9	DETECT MANUAL HANDOFF MODE INDICATION		
	TASK TYPE: R COORD MEDIA: FREQUENCY: LOW CRITICALITY: MED		
A1.4.7.9.1	ACQUIRE _Full_Data_Block on _Situation_Display for auto handoff inhibit indication A/O	Full_Data_Block Situation_Display	27 1
A1.4.7.9.2	ACQUIRE _Track_Status in _Target_Position_Symbol for information which may aid in determining track status	Track_Status Target_Position_Symbol	1 1
A1.4.7.9.3	RECOGNIZE that the automatic handoff status has been inhibited and that a manual handoff is necessary		
A1.4.7.10	REQUEST TRANSFER OF FLIGHT PLAN DATA TO ANOTHER FACILITY		
	TASK TYPE: E COORD MEDIA: FREQUENCY: LOW CRITICALITY: MED		
A1.4.7.10.1	INITIATE _Transfer_Flight_Plan message to transfer flight plan data to another facility	Transfer_Flight_Plan	1
A1.4.7.10.2	EXECUTE _Transfer_Flight_Plan message	Transfer_Flight_Plan	1
A1.4.7.10.3	DETECT system acceptance of Transfer Flight Plan message		
A1.4.7.11	INFORM CONTROLLER OF ANY CONDITIONS AFFECTING TRANSFER OF CONTROL		
	TASK TYPE: E/VC COORD MEDIA: V/M FREQUENCY: LOW CRITICALITY: HI		
A1.4.7.11.1	PERFORM TEM M.2, Sending ATC Mail *informing controller of any conditions affecting the transfer of control of an aircraft* O		
A1.4.7.11.2	PERFORM VSCS, Initiating G/G Communications *informing a controller of any conditions affecting the transfer of control of an aircraft*		
A1.4.7.12	INFORM CONTROLLER OF RELINQUISHED CONTROL OF AIRCRAFT		
	TASK TYPE: E/VC COORD MEDIA: V/M FREQUENCY: MED CRITICALITY: HI		
A1.4.7.12.1	PERFORM TEM M.2, Sending ATC Mail *advising controller of a release of control of an aircraft* O		
A1.4.7.12.2	PERFORM VSCS, Initiating G/G Communications *advisin controller of a release of control of an aircraft*		

TASK NUMBER / ELEMENT NUMBER	TASK STATEMENTS / DATA AND TASK ELEMENT STATEMENTS	OBJECTS	NO. OF OBJECTS
A1.4.7.13	DETECT HANDOFF ALERT INDICATION		
	TASK TYPE: R COORD MEDIA: FREQUENCY: LOW CRITICALITY: HI		
A1.4.7.13.1	SEARCH _Full_Data_Block on the _Situation_Display for status of handoff	Full_Data_Block Situation_Display	15 1
A1.4.7.13.2	DETECT _Handoff_Not_Accepted indication *handoff alert indication* in _Full_Data_Block *indicating that a handoff has not been accepted within parameter time/distance from boundary*	Handoff_Not_Accepted Full_Data_Block	1 1
A1.4.7.13.3	EXTRACT the emphasized data regarding the non-acceptance of a handoff		
A1.4.7.14	REDIRECT HANDOFF		
	TASK TYPE: E COORD MEDIA: V/F FREQUENCY: LOW CRITICALITY: HI		
A1.4.7.14.1	INITIATE _Redirect_Handoff message to initiate a handoff to another position or facility	Redirect_Handoff	1
A1.4.7.14.2	EXECUTE _Redirect_Handoff message	Redirect_Handoff	1
A1.4.7.14.3	DETECT system acceptance of the _Redirect_Handoff message by observing the _Handoff_Status/Indicator in the _Full_Data_Block	Redirect_Handoff Handoff_Status/Indicator Full_Data_Block	1 1 1
A1.4.7.15	RECEIVE HANDOFF REJECTION		
	TASK TYPE: R/VC COORD MEDIA: V/F FREQUENCY: LOW CRITICALITY: EXT		
A1.4.7.15.1	ACQUIRE _Handoff_Status/Indicator in appropriate _Full_Data_Block for handoff status *rejection* 0	Handoff_Status/Indicator Full_Data_Block	1 1
A1.4.7.15.2	PERFORM VSCS, Receiving G/G Communications *notice of handoff rejection*		
A1.4.8.1	INITIATE POINTOUT		
	TASK TYPE: E/VC COORD MEDIA: V/F FREQUENCY: LOW CRITICALITY: HI		
A1.4.8.1.1	INITIATE _Initiate_Pointout message to point out target to another sector or facility	Initiate_Pointout	1
A1.4.8.1.2	EXECUTE _Initiate_Pointout message	Initiate_Pointout	1
A1.4.8.1.3	DETECT _Initiate_Pointout message acceptance by the system by observing the _Pointout_Indicator in the _Full_Data_Block on the Situation Display 0	Initiate_Pointout Pointout_Indicator Full_Data_Block	1 1 1
A1.4.8.1.4	PERFORM VSCS, Initiating G/G Communications *pointout*		
A1.4.8.3	FORCE FLIGHT DATA ENTRY TO ANOTHER CONTROLLER		
	TASK TYPE: E COORD MEDIA: F FREQUENCY: LOW CRITICALITY: MED		
A1.4.8.3.1	INITIATE _Flight_Data_Entry_Pointout message to force flight data to another sector or facility	Flight_Data_Entry_Pointout	1

TASK NUMBER / ELEMENT NUMBER	TASK STATEMENTS / DATA AND TASK ELEMENT STATEMENTS	OBJECTS	NO. OF OBJECTS
A1.4 8.3	FORCE FLIGHT DATA ENTRY TO ANOTHER CONTROLLER		
	TASK TYPE: E COORD MEDIA: F FREQUENCY: LOW CRITICALITY: MED (Continued)		
A1.4.8 3.2	EXECUTE _Flight_Data_Entry_Pointout message	Flight_Data_Entry_Pointout	1
A1.4 8 3 3	DETECT system acceptance of flight data entry pointout message		
A1.4.8 4	RECEIVE ACCEPTANCE OF POINTOUT		
	TASK TYPE: R/VC COORD MEDIA: V/F FREQUENCY: MED CRITICALITY: HI		
A1.4 8 4.1	PERFORM VSCS, Receiving G/G Communications "notice of pointout acceptance" O		
A1.4 8 4 2	ACQUIRE _Pointout_Indicator in appropriate _Full_Data_Block for pointout status "accept"	Pointout_Indicator Full_Data_Block	1 1
A1.4 8 5	RECEIVE REJECTION OF POINTOUT		
	TASK TYPE: R/VC COORD MEDIA: V/F FREQUENCY: LOW CRITICALITY: HI		
A1.4 8.5.1	PERFORM VSCS, Receiving G/G Communications "rejection of pointout" O		
A1.4 8.5.2	ACQUIRE _Pointout_Indicator in appropriate _Full_Data_Block for pointout status "reject"	Pointout_Indicator Full_Data_Block	1 1
A1.4 8.7	DISCUSS POINTOUT WITH OTHER CONTROLLER		
	TASK TYPE: VC COORD MEDIA: V FREQUENCY: LOW CRITICALITY: HI		
A1.4 8.7.1	PERFORM VSCS, Initiating G/G Communications "informing controller regarding a pointout"		
A1.4 8 7.2	PERFORM VSCS, Receiving G/G Communications "discuss pointout"		
A1.4.9.1	RECEIVE POINTOUT		
	TASK TYPE: R/VC COORD MEDIA: V/F FREQUENCY: MED CRITICALITY: HI		
A1.4 9.1.1	ACQUIRE _Pointout_Indicator in _Full_Data_Block for indication of pointout being directed to sector O	Pointout_Indicator Full_Data_Block	1 1
A1.4.9.1.2	PERFORM VSCS, Receiving G/G Communications "pointout request" O		
A1.4.9 1.3	DETECT _Full_Data_Block forced onto _Situation_Display "data block pointout"	Full_Data_Block Situation_Display	1 1
A1 4 9.1.4	ACQUIRE _Flight_Data_Entry forced onto _Flight_Data_Display "FDE pointout"	Flight_Data_Entry Flight_Data_Display	1 1
A1.4.9.2	ACCEPT POINTOUT		
	TASK TYPE: E/VC COORD MEDIA: V/F FREQUENCY: MED CRITICALITY: HI		
A1.4.9.2 1	PERFORM VSCS, Initiating G/G Communications "pointout acceptance" O		

TASK NUMBER / ELEMENT NUMBER	TASK STATEMENTS / DATA AND TASK ELEMENT STATEMENTS	OBJECTS	NO. OF OBJECTS
A1.4.9.2	ACCEPT POINTOUT		
	TASK TYPE: E/VC COORD MEDIA: V/F FREQUENCY: MED CRITICALITY: HI (Continued)		
A1.4.9.2.2	INITIATE _Pointout_Accept message for acceptance of data block pointout	Pointout_Accept	1
A1.4.9.2.3	EXECUTE _Pointout_Accept message	Pointout_Accept	1
A1.4.9.2.4	DETECT _Accept in _Pointout_Indicator in _FullData_Block	Accept Pointout_Indicator FullData_Block	1 1 1
A1.4.9.3	DENY POINTOUT		
	TASK TYPE: E/VC COORD MEDIA: V/F FREQUENCY: LOW CRITICALITY: HI		
A1.4.9.3.1	PERFORM VSCS, Initiating G/G Communications *pointout rejection* O		
A1.4.9.3.2	INITIATE _Pointout_Reject message to reject a data block pointout	Pointout_Reject	1
A1.4.9.3.3	EXECUTE _Pointout_Reject message	Pointout_Reject	1
A1.4.9.3.4	DETECT _Rejecta in _Pointout_Indicator in _Full_Data_Block	Rejecta Pointout_Indicator Full_Data_Block	1 1 1
A1.4.9.4	SUPPRESS FULL DATA BLOCK AFTER POINTOUT		
	TASK TYPE: E COORD MEDIA: FREQUENCY: LOW CRITICALITY: LOW		
A1.4.9.4.1	INITIATE _Force_Data_Block message to remove a _Data_Block from _Situation_Display which had been previously forced to the sector concerned	Force_Data_Block Data_Block Situation_Display	1 1 1
A1.4.9.4.2	EXECUTE _Force_Data_Block message	Force_Data_Block	1
A1.4.9.4.3	RECOGNIZE _Data_Block removal from _Situation_Display	Data_Block Situation_Display	1 1
A1.4.9.5	DETERMINE RESPONSE TO POINTOUT		
	TASK TYPE: R/A COORD MEDIA: FREQUENCY: LOW CRITICALITY: HI		
A1.4.9.5.1	ACQUIRE _Position_Symbol, _Data_Block, _Background_Descriptor on _Situation_Display to determine necessity to accept/ reject pointout A/O	Position_Symbol Data_Block Background_Descriptor Situation_Display	30 27 3 1
A1.4.9.5.2	ACQUIRE _Flight_Data_Entry, _Time on _Flight_Data_Display to determine action required regarding pointout	Flight_Data_Entry Time Flight_Data_Display	1 1 1
A1.4.9.5.3	SYNTHESIZE altitude, route, aircraft, and speed information into a mental picture with regard to pointout		
A1.4.9.5.4	DECIDE appropriate response to pointout		
A1.4.10.2	APPROVE CLEARANCE REQUEST		
	TASK TYPE: E/VC COORD MEDIA: V/M FREQUENCY: HI CRITICALITY: HI		
A1.4.10.2.1	PERFORM VSCS, Initiating G/G Communications *giving approval to a clearance request* O		

TASK NUMBER / ELEMENT NUMBER	TASK STATEMENTS / DATA AND TASK ELEMENT STATEMENTS	OBJECTS	NO. OF OBJECTS
A1.4.10.2	APPROVE CLEARANCE REQUEST		
	TASK TYPE: E/VC COORD MEDIA: V/M FREQUENCY: HI CRITICALITY: HI (Continued)		
A1.4.10.2.2	PERFORM TEM M.2, Sending ATC Mail *giving approval to a clearance request*		
A1.4.10.3	SUGGEST CLEARANCE ALTERNATIVES TO PILOT		
	TASK TYPE: VC COORD MEDIA: V FREQUENCY: MED CRITICALITY: MED		
A1.4.10.3.1	PERFORM VSCS, Communicating Normally Air-To-Ground *clearance alternative to pilot*		
A1.4.10.4	FORMULATE A CLEARANCE WITH APPROPRIATE INSTRUCTIONS		
	TASK TYPE: A COORD MEDIA: FREQUENCY: HI CRITICALITY: HI		
A1.4.10.4.1	ACQUIRE _Position_Symbol, _Data_Block, _Weather_Descriptor, _Background_Descriptor on _Situation_Display for information pertaining to formulating a clearance	Position_Symbol Data_Block Weather_Descriptor Background_Descriptor Situation_Display	30 27 1 1 1
A1.4.10.4.2	SYNTHESIZE altitude, route, weather, and airspace information into a mental traffic picture with regard to formulating a clearance		
A1.4.10.4.3	FORMULATE a clearance with appropriate instructions to provide required separation		
A1.4.10.5	ISSUE CLEARANCE AND INSTRUCTIONS TO PILOT		
	TASK TYPE: VC COORD MEDIA: V FREQUENCY: HI CRITICALITY: HI		
A1.4.10.5.1	*CROSS-REFERENCE _Flight_Data_Entry for planned actions and instructions	Flight_Data_Entry	1
A1.4.10.5.2	PERFORM VSCS, Communicating Normally Air-To-Ground *current clearance and instructions*		
A1.4.10.6	ISSUE CLEARANCE THROUGH ATCT/FSS FOR RELAY TO PILOT		
	TASK TYPE: E/VC COORD MEDIA: V/M FREQUENCY: LOW CRITICALITY: HI		
A1.4.10.6.1	PERFORM VSCS, Initiating G/G Communications *clearance and instructions for relay to pilot*		
	O		
A1.4.10.6.2	PERFORM TEM M.2, Sending ATC Mail *issuing clearance and instructions for relay to pilot*		
A1.4.10.7	VERIFY AIRCRAFT COMPLIANCE WITH CLEARANCE		
	TASK TYPE: R/A COORD MEDIA: FREQUENCY: HI CRITICALITY: HI		
A1.4.10.7.1	ACQUIRE _Position_Symbol, _Data_Block, _Weather_Descriptor, _Background_Descriptor on _Situation_Display for compliance with clearance	Position_Symbol Data_Block Weather_Descriptor ckground_Descriptor Situation_Display	30 27 1 1 1

TASK NUMBER / ELEMENT NUMBER	TASK STATEMENTS / DATA AND TASK ELEMENT STATEMENTS	OBJECTS	NO. OF OBJECTS
A1.4.10.7	VERIFY AIRCRAFT COMPLIANCE WITH CLEARANCE		
	TASK TYPE: R/A COORD MEDIA: FREQUENCY: HI CRITICALITY: HI (Continued)		
A1.4.10.7.2	SYNTHESIZE altitude, route, weather, and airspace information into a mental traffic picture with respect to aircraft compliance with clearance instructions		
A1.4.10.7.3	DECIDE if aircraft is in compliance with clearance instructions as issued by ATC		
A1.4.10.8	QUERY PILOT REGARDING CONFORMANCE WITH CLEARANCE		
	TASK TYPE: VC COORD MEDIA: V FREQUENCY: LOW CRITICALITY: HI		
A1.4.10.8.1	PERFORM VSCS, Communicating Normally Air-To-Ground *clearance non-compliance query and response*		
A1.4.10.9	DENY CLEARANCE REQUEST		
	TASK TYPE: E/VC COORD MEDIA: V/M FREQUENCY: LOW CRITICALITY: MED		
A1.4.10.9.1	PERFORM TEM M.2, Sending ATC Mail *clearance denial*		
	O		
A1.4.10.9.2	PERFORM VSCS, Initiating G/G Communications *clearance denial*		
	O		
A1.4.10.9.3	PERFORM VSCS, Communicating Normally Air-To-Ground *clearance denial*		
A1.4.10.10	SUGGEST ALTERNATIVE TO CLEARANCE REQUEST FROM CONTROLLER		
	TASK TYPE: E/VC COORD MEDIA: V/M FREQUENCY: LOW CRITICALITY: MED		
A1.4.10.10.1	PERFORM VSCS, Initiating G/G Communications *clearance alternative*		
	O		
A1.4.10.10.2	PERFORM TEM M.2, Sending ATC Mail *clearance alternative*		
A1.4.12.1	INHIBIT AUTOMATIC HANDOFF FOR ALL TRACKS OR FOR DESIGNATED TRACK		
	TASK TYPE: E COORD MEDIA: FREQUENCY: LOW CRITICALITY: LOW		
A1.4.12.1.1	INITIATE _Inhibit_Automatic_Handoff message	Inhibit_Automatic_Handoff	1
A1.4.12.1.2	EXECUTE _Inhibit_Automatic_Handoff message	Inhibit_Automatic_Handoff	1
A1.4.12.1.3	DETECT _Auto_Handoff_Inhibited message in _Handoff_Alert_Indication in Full Data Block on Situation Display	Auto_Handoff_Inhibited Handoff_Alert_Indication	1 1
A1.4.12.1.4	DETECT entries in _Auto_Handoff/Pointout_inhibit_List	Auto_Handoff/Pointout_Inhibit_List	1
A1.4.12.2	RESTORE AUTOMATIC HANDOFF FOR ALL TRACKS OR FOR DESIGNATED TRACK		
	TASK TYPE: E COORD MEDIA: FREQUENCY: LOW CRITICALITY: LOW		
A1.4.12.2.1	INITIATE _Enable_Automatic_Handoff message	Enable_Automatic_Handoff	1

TASK NUMBER / ELEMENT NUMBER	TASK STATEMENTS / DATA AND TASK ELEMENT STATEMENTS	OBJECTS	NO. OF OBJECTS
A1.4.12.2	RESTORE AUTOMATIC HANDOFF FOR ALL TRACKS OR FOR DESIGNATED TRACK		
	TASK TYPE: E COORD MEDIA: FREQUENCY: LOW CRITICALITY: LOW (Continued)		
A1.4.12.2.2	EXECUTE _Enable_Automatic_Handoff message	Enable_Automatic_Handoff	1
A1.4.12.2.3	RECOGNIZE absence of _Auto_Handoff_Inhibited message in _Handoff_Alert_Indication in Full Data Block on Situation Display	Auto_Handoff_Inhibited Handoff_Alert_Indication	1 1
	A/O		
A1.4.12.2.4	DETECT absence of entries in _Auto_handoff/Pointout_Inhibit_List	Auto_handoff/Pointout_Inhibit_List	1
A1.4.13.1	RECEIVE REQUEST TO CANCEL AIR TRAFFIC SERVICES		
	TASK TYPE: VC COORD MEDIA: V FREQUENCY: LOW CRITICALITY: LOW		
A1.4.13.1.1	PERFORM VSCS, Communicating Normally Air-To-Ground *request from pilot to cancel air traffic services*		
A1.4.13.2	TERMINATE RADIO COMMUNICATIONS WITH AIRCRAFT		
	TASK TYPE: VC COORD MEDIA: V FREQUENCY: LOW CRITICALITY: LOW		
A1.4.13.2.1	PERFORM VSCS, Communicating Normally Air-To-Ground *advising a pilot to change to another frequency or that a listening watch is no longer required on assigned frequency*		
A1.4.13.3	RECEIVE ARRIVAL MESSAGE		
	TASK TYPE: VC COORD MEDIA: V FREQUENCY: LOW CRITICALITY: MED		
A1.4.13.3.1	PERFORM VSCS, Receiving G/G Communications *notice of arrival time*		
	O		
A1.4.13.3.2	PERFORM VSCS, Communicating Normally Air-To-Ground *notice from pilot of arrival time at destination airport*		
A1.4.13.4	DETERMINE FREQUENCY IN USE BY RECEIVING SECTOR		
	TASK TYPE: R/A COORD MEDIA: FREQUENCY: LOW CRITICALITY: MED		
A1.4.13.4.1	SEARCH _System_Status_Data_Display *for discrete frequency in use by sector*	System_Status_Data_Display	1
	O		
A1.4.13.4.2	EXTRACT assigned frequencies from _System_Status_Data_Display	System_Status_Data_Display	1
	O		
A1.4.13.4.3	PERFORM VSCS, Receiving VSCS Status/ Reconfigurations		
	O		
A1.4.13.4.4	SEARCH _Static_Information_Display for assigned frequencies	Static_Information_Display	1
A1.4.13.4.5	EXTRACT assigned frequencies from _Static_Information_Display	Static_Information_Display	1
A1.4.13.5	ISSUE CHANGE OF FREQUENCY TO PILOT		
	TASK TYPE: VC COORD MEDIA: V FREQUENCY: HI CRITICALITY: MED		
A1.4.13.5.1	PERFORM VSCS, Communicating Normally Air-To-Ground *issuing a frequency change to an aircraft*		

TASK NUMBER / ELEMENT NUMBER	TASK STATEMENTS / DATA AND TASK ELEMENT STATEMENTS	OBJECTS	NO. OF OBJECTS
A1.4.13.6	RECEIVE INITIAL RADIO CONTACT FROM PILOT		
	TASK TYPE: VC COORD MEDIA: V FREQUENCY: HI CRITICALITY: HI		
A1.4.13.6.1	PERFORM VSCS, Communicating Normally Air-To-Ground *initial call from pilot reporting his presence on frequency*		
A1.4.13.7	ISSUE ALTIMETER SETTING		
	TASK TYPE: R/VC COORD MEDIA: V FREQUENCY: HI CRITICALITY: MED		
A1.4.13.7.1	ACQUIRE _Airport_Environmental_Data_Display for current terminal altimeter	Airport_Environmental_Data_Display	1
	0		
A1.4.13.7.2	SEARCH Aeronautical And Meteorlogical Information *for current altimeter setting for specific area*		
A1.4.13.7.3	EXTRACT Altimeter Setting from Aeronautical And Meteorological Information		
	0		
A1.4.13.7.4	EXTRACT Barometric Pressure from Aeronautical And Meteorological Information		
A1.4.13.7.5	PERFORM VSCS, Communicating Normally Air-To-Ground *issuing altimeter to a pilot along route or at destination*		
A1.4.13.8	VERIFY AIRCRAFT ALTITUDE		
	TASK TYPE: R/A/VC COORD MEDIA: V FREQUENCY: HI CRITICALITY: HI		
A1.4.13.8.1	SEARCH _Full_Data_Block on _Situation_Display for system reported altitude of aircraft in question	Full_Data_Block Situation_Display	1 1
A1.4.13.8.2	EXTRACT _Callsign, _Mode_C_Altitude, _Assigned_Altitude or _Interim_Altitude from _Full_Data_Block on Situation Display	Callsign Mode_C_Altitude Assigned_Altitude Interim_Altitude Full_Data_Block	1 1 1 1 1
	0		
A1.4.13.8.3	SEARCH _Flight_Data_Entry on _Flight_Data_Display for system reported altitude of aircraft in question	Flight_Data_Entry Flight_Data_Display	20 1
A1.4.13.8.4	EXTRACT _Assigned_Altitude, _Reported_Altitude, _Mode_C_Altitude from _Flight_Data_Entry of aircraft in question	Assigned_Altitude Reported_Altitude Mode_C_Altitude Flight_Data_Entry	1 1 1 1
A1.4.13.8.5	PERFORM VSCS, Communicating Normally Air-To-Ground *request for pilot report of altitude of aircraft*		
A1.4.13.8.6	COMPARE pilot altitude with system reported altitude		
A1.4.14.1	OBSERVE TARGET ENTERING RADAR COVERAGE		
	TASK TYPE: R/A COORD MEDIA: FREQUENCY: HI CRITICALITY: MED		
A1.4.14.1.1	SEARCH _Situation_Display for presence of new radar targets	Situation_Display	1

TASK NUMBER / ELEMENT NUMBER	TASK STATEMENTS / DATA AND TASK ELEMENT STATEMENTS	OBJECTS	NO. OF OBJECTS
A1.4.14.1	OBSERVE TARGET ENTERING RADAR COVERAGE		
	TASK TYPE: R/A COORD MEDIA: FREQUENCY: HI CRITICALITY: MED (Continued)		
A1.4.14.1.2	EXTRACT _Target_Position_Symbol, _Track_Position_Symbol, _Full_Data_Block from _Situation_Display	Target_Position_Symbol Track_Position_Symbol Full_Data_Block Situation_Display	30 27 15 1
A1.4.14.1.3	DETECT appearance of new _Primary_Target_Class Symbol not associated with Track Position Symbol or Data Block on _Situation_Display O	Primary_Target_Class Situation_Display	1 1
A1.4.14.1.4	DETECT appearance of new _Beacon_Target_Category Symbol not associated with Track Position Symbol or Data Block on _Situation_Display	Beacon_Target_Category Situation_Display	1 1
A1.4 14.2	INFORM PILOT THAT RADAR CONTACT IS ESTABLISHED		
	TASK TYPE: VC COORD MEDIA: V FREQUENCY: HI CRITICALITY: MED		
A1.4.14.2.1	PRERFORM VSCS, Communicating Normally Air-To-Ground *advising pilot that radar contact has been established*		
A1.4.14.3	CONDUCT RADAR IDENTIFICATION PROCEDURES		
	TASK TYPE: R/VC COORD MEDIA: V FREQUENCY: MED CRITICALITY: HI		
A1.4.14.3.1	PERFORM VSCS, Communicating Normally Air-To-Ground *radar indentification procedures*		
A1.4.14.3.2	SCAN _Target_Position_Symbol. _Background_Descriptor on _Situation_Display *for target over reported fix, target within one mile of runway end, or observe target turning* O	Target_Position_Symbol Background_Descriptor Situation_Display	30 1 1
A1.4.14.3.3	SCAN _Target_Position_Symbol, _Data_Block, on _Situation_Display *for identification activation, code change, or standby/ normal transponder operation*	Target_Position_Symbol Data_Block Situation_Display	1 1 1
A1.4.14.3.4	DETECT appropriate response in _Targat_Postion_Symbol	Target_Postion_Symbol	1
A1.5.1.3	RECEIVE WEATHER BRIEFING FROM METEOROLOGIST		
	TASK TYPE: R/VC COORD MEDIA: V/M FREQUENCY: LOW CRITICALITY: HI		
A1.5.1.3.1	PERFORM VSCS, Receiving G/G Communications *weather briefing from meteorologist* O		
A1.5.1.3.2	PERFORM TEM M.1, Receiving ATC Mail *weather briefingg from meteorologist*		
A1.5.1.5	DETERMINE WHETHER ANOTHER CONTROLLER OR PILOT NEEDS WEATHER ADVISORY		
	TASK TYPE: A COORD MEDIA: FREQUENCY: LOW CRITICALITY: MED		
A1.5.1.5.1	ASSESS the need to forword a weather advisory to another controller A/O		

TASK NUMBER / ELEMENT NUMBER	TASK STATEMENTS / DATA AND TASK ELEMENT STATEMENTS	OBJECTS	NO. OF OBJECTS
A1.5.1.5	DETERMINE WHETHER ANOTHER CONTROLLER OR PILOT NEEDS WEATHER ADVISORY		
	TASK TYPE: A COORD MEDIA: FREQUENCY: LOW CRITICALITY: MED (Continued)		
A1.5.1.5.2	ASSESS the need to forward a weather advisory to a pilot		
A1.5.1.9	ISSUE WEATHER/ ADVISORY/ UPDATE TO PILOT/ ANOTHER CONTROLLER		
	TASK TYPE: E/VC COORD MEDIA: V/M FREQUENCY: LOW CRITICALITY: HI		
A1.5.1.9.1	PERFORM VSCS, Communicating Normally Air-To-Ground *weather advisory*		
	O		
A1.5.1.9.2	PERFORM VSCS, Initiating G/G Communications *weather advisory*		
	O		
A1.5.1.9.3	PERFORM TEM M.2, Sending ATC Mail *weather advisory*		
A1.5.1.10	INFORM SUPERVISOR/ TMC OF WEATHER IMPACT ON ROUTES/ FLOW		
	TASK TYPE: E/VC COORD MEDIA: V/M FREQUENCY: LOW CRITICALITY: HI		
A1.5.1.10.1	PERFORM VSCS, Initiating G/G Communications *weather impact on routes and flows*		
	A/O		
A1.5.1.10.2	PERFORM TEM M.2, Sending ATC Mail *weather impact on routes and flows*		
A1.5.1.12	RECEIVE WEATHER ADVISORY FROM ANOTHER CONTROLLER/ SUPERVISOR/ METEOROLOGIST		
	TASK TYPE: R/VC COORD MEDIA: V/M FREQUENCY: LOW CRITICALITY: HI		
A1 5.1.12.1	PERFORM VSCS, Receiving G/G Communications *weather advisory*		
	O		
A1.5.1.12.2	PERFORM TEM M.1, Receiving ATC Mail *weather advisory*		
A1.5.1.13	RECEIVE CONTROLLER REQUEST FOR WEATHER INFORMATION		
	TASK TYPE: R/VC COORD MEDIA: V/M FREQUENCY: LOW CRITICALITY: MED		
A1.5.1.13.1	PERFORM VSCS, Receiving G/G Communications *request for weather*		
	O		
A1.5.1.13.2	PERFORM TEM M.1, Receiving ATC Mail *request for weather*		
A1.5.1.14	FORWARD WEATHER INFORMATION TO SUPERVISOR/ METEOROLOGIST		
	TASK TYPE: E/VC COORD MEDIA: V/M FREQUENCY: LOW CRITICALITY: MED		
A1.5.1.14.1	PERFORM VSCS, Initiating G/G Communications *forward weather information*		
	O		
A1.5.1.14.2	PERFORM TEM M.2, Sending ATC Mail *weather information*		
A1.5.1.16	BROADCAST RECORDED WEATHER INFORMATION		
	TASK TYPE: VC COORD MEDIA: V FREQUENCY: LOW CRITICALITY: MED		
A1.5.1.16.1	PERFORM VSCS, Broadcasting Pre-Recorded Weather Information		

TASK NUMBER / ELEMENT NUMBER	TASK STATEMENTS / DATA AND TASK ELEMENT STATEMENTS	OBJECTS	NO. OF OBJECTS
A1.5.1.18	REQUEST SUPERVISOR/ TMC TO RELEASE AIRSPACE		
	TASK TYPE: E/VC COORD MEDIA: V/M FREQUENCY: LOW CRITICALITY: LOW		
A1.5.1.18.1	PERFORM VSCS, Initiating G/G Communications *request to release airspace*		
	O		
A1.5.1.18.2	PERFORM TEM M.2, Sending ATC Mail *request to release airspace*		
A1.5.1.22	ENTER AIRPORT ENVIRONMENTAL DATA INTO SYSTEM		
	TASK TYPE: E COORD MEDIA: FREQUENCY: LOW CRITICALITY: MED		
A1.5.1.22.1	INITIATE _ATIS_Character message	ATIS_Character	1
A1.5.1.22.2	EXECUTE _ATIS_Character message	ATIS_Character	1
A1.5.1.22.3	DETECT new _ATIS_Character on _Airport_Environmental_Data_Display	ATIS_Character Airport_Environmental_Data_Display	1 1
	A/O		
A1.5.1.22.4	INITIATE _Update_Altimeter_Setting message	Update_Altimeter_Setting	1
A1.5.1.22.5	EXECUTE _Update_Altimeter_Setting message	Update_Altimeter_Setting	1
A1.5.1.22.6	DETECT system acceptance of new _Update_Altimeter_Setting	Update_Altimeter_Setting	1
A1.5.1.75	OBSERVE DISPLAY OF WEATHER LINE/ INTENSITY/ MOVEMENT		
	TASK TYPE: R/A COORD MEDIA: FREQUENCY: LOW CRITICALITY: HI		
A1.5.1.75.1	ACQUIRE _Graphic_ATC_Radar on _Situation_Display for actual weather precipitation conditions	Graphic_ATC_Radar Situation_Display	1 1
A1.5.1.75.2	SYNTHESIZE acquired weather information into a mental weather picture		
A1.5.1.75.3	ASSESS severity of weather conditions		
A1.5.1.75.4	ESTIMATE the dimensions and movement of the weather if such data are not available		
A1.5.1.76	DETERMINE WEATHER IMPACT ON ROUTES/ FLOW		
	TASK TYPE: A COORD MEDIA: FREQUENCY: LOW CRITICALITY: HI		
A1.5.1.76.1	INTEGRATE mental weather picture with mental traffic picture		
A1.5.1.76.2	ASSESS the impact of known and forecast weather on traffic flows and routes		
A1.5.1.77	DETERMINE ALTITUDE/ROUTE CHANGE TO BYPASS SEVERE WEATHER		
	TASK TYPE: A COORD MEDIA: FREQUENCY: LOW CRITICALITY: HI		
A1.5.1.77.1	INTEGRATE mental weather picture with mental traffic picture		

TASK NUMBER / ELEMENT NUMBER	TASK STATEMENTS / DATA AND TASK ELEMENT STATEMENTS	OBJECTS	NO. OF OBJECTS
A1.5.1.77	DETERMINE ALTITUDE/ROUTE CHANGE TO BYPASS SEVERE WEATHER		
	TASK TYPE: A COORD MEDIA: FREQUENCY: LOW CRITICALITY: HI (Continued)		
A1.5.1.77.2	DECIDE altitude/ route to bypass severe weather based on mental traffic and weather picture and routes through area		
A1.5.1.78	EVALUATE IMPACT OF NEW A&M CONDITION		
	TASK TYPE: R/A COORD MEDIA: FREQUENCY: LOW CRITICALITY: MED		
A1.5.1.78.1	ACQUIRE Aeronautical And Meteorological Information for new data which may effect workload		
	A/O		
A1.5.1.78.2	ACQUIRE _Airport_Environmental_Data_Dis play for new data which may affect workload	Airport_Environmental_Data_Display	1
	A/O		
A1.5.1.78.3	PERFORM VSCS, Communicating Normally Air-To-Ground *pilot request for altitude change or reroute*		
A1.5.1.78.4	SYNTHESIZE new A&M data and the number of pilot requests for altitude change or reroute into a mental weather picture		
A1.5.1.78.5	COMPARE new mental weather picture with mental traffic picture		
A1.5.1.78.6	EVALUATE new Aeronautical and Meteorological Data for impact on traffic		
A1.5.1.79	RECEIVE PIREP ON WEATHER		
	TASK TYPE: VC COORD MEDIA: V FREQUENCY: LOW CRITICALITY: MED		
A1.5.1.79.1	PERFORM VSCS, Communicating Normally Air-To-Ground *PIREP*		
A1.5.1.80	RECEIVE NEW ROUTING FOR WEATHER AVOIDANCE FROM SUPERVISOR/ TMC		
	TASK TYPE: R/VC COORD MEDIA: V/M FREQUENCY: LOW CRITICALITY: HI		
A1.5.1.80.1	PERFORM VSCS, Receiving G/G Communications *new routing for weather avoidance*		
	A/O		
A1.5.1.80.2	PERFORM TEM M.1, Receiving ATC Mail *new routing for weather avoidance*		
A1.5.1.81	FORWARD URGENT PIREP TO OTHER CONTROLLER		
	TASK TYPE: VC COORD MEDIA: V/M FREQUENCY: LOW CRITICALITY: HI		
A1.5.1.81.1	PERFORM VSCS, Initiating G/G Communications *forward PIREP information*		
	O		
A1.5.1.81.2	PERFROM TEM M.2, Sending ATC Mail *PIREP information*		
A1.5.1.82	RECORD PIREP NOTE		
	TASK TYPE: E COORD MEDIA: FREQUENCY: LOW CRITICALITY: MED		
A1.5.1.82.1	INTRODUCE controller note record *copy PIREP*		

TASK NUMBER / ELEMENT NUMBER	TASK STATEMENTS / DATA AND TASK ELEMENT STATEMENTS	OBJECTS	NO. OF OBJECTS
A1.5.1.83	REQUEST WEATHER INFORMATION		
	TASK TYPE: E/VC COORD MEDIA: V/M FREQUENCY: LOW CRITICALITY: MED		
A1.5.1.83.1	PERFORM VSCS, Initiating G/G Communications *request weather information*		
	O		
A1.5.1.83.2	PERFORM TEM M.2, Sending ATC Mail *request weather information*		
	O		
A1.5.1.83.3	INITIATE _Select_Environmental_Data_Types_For_Display	Select_Environmental_Data_Types_For_Display	1
A1.5.1.83.4	EXECUTE _Select_Environmental_Data_Types_For_Display	Select_Environmental_Data_Types_For_Display	1
A1.5.1.83.5	DETECT requested weather data on _Airport_Environmental_Data_Display	Airport_Environmental_Data_Display	1
	O		
A1.5.1.83.6	INITIATE _Select_ATC_Radar_Precipitation_Level_For_Display	Select_ATC_Radar_Precipitation_Level_For_Disp	1
A1.5.1.83.7	EXECUTE _Select_ATC_Radar_Precipitation_Level_For_Display	Select_ATC_Radar_Precipitation_Level_For_Disp	1
A1.5.1.83.8	DETECT _Graphic_ATC_Radar_Weather on _Situation_Display	Graphic_ATC_Radar_Weather Situation_Display	1 1
A1.5.2.1	RECEIVE AIRPORT SPECIFIC NOTAM		
	TASK TYPE: R/VC COORD MEDIA: V/F/M FREQUENCY: LOW CRITICALITY: LOW		
A1.5.2.1.1	PERFORM VSCS, Receiving G/G Communications *airport specific NOTAM*		
	O		
A1.5.2.1.2	PERFORM TEM M.1, Receiving ATC Mail *airport specific NOTAM*		
	O		
A1.5.2.1.3	OBSERVE _Airport_Specific_NOTAM on _Airport_Environmental_Data_Display	Airport_Specific_NOTAM Airport_Environmental_Data_Display	1 1
A1.5.2.2	RECEIVE WEATHER REPORT UPDATE (E.G., HOURLY SURFACE OBSERVATION)		
	TASK TYPE: R/VC COORD MEDIA: V/M FREQUENCY: LOW CRITICALITY: MED		
A1.5.2.2.1	ACQUIRE Aeronautical And Meteorological Information for changes in weather data		
	A/O		
A1.5.2.2.2	ACQUIRE _Airport_Environmental_Data_Display for current weather information	Airport_Environmental_Data_Display	1
	A/O		
A1.5.2.2.3	PERFORM VSCS, Receiving G/G Communications *weather report update, e.g., hourly surface observation*		
	A/O		
A1.5.2.2.4	PERFORM TEM M.1, Receiving ATC Mail *weather report update*		
A1.5.2.4	DETERMINE WHETHER RUNWAY CONDITIONS HAVE CHANGED		
	TASK TYPE: R/A COORD MEDIA: FREQUENCY: MED CRITICALITY: HI		
A1.5.2.4.1	ACQUIRE _Airport_Environmental_Data_Display for information pertaining to change in runway condition	Airport_Environmental_Data_Display	1

TASK NUMBER / ELEMENT NUMBER	TASK STATEMENTS / DATA AND TASK ELEMENT STATEMENTS	OBJECTS	NO. OF OBJECTS
A1.5.2.4	DETERMINE WHETHER RUNWAY CONDITIONS HAVE CHANGED		
	TASK TYPE: R/A COORD MEDIA: FREQUENCY: MED CRITICALITY: HI (Continued)		
A1.5.2.4.2	DECIDE whether runway conditions have changed based on available information		
A1.5.2.5	DETERMINE WHETHER CONTROL ZONE IS IFR/VFR		
	TASK TYPE: R/A COORD MEDIA: FREQUENCY: LOW CRITICALITY: HI		
A1.5.2.5.1	ACQUIRE _Airport_Environmental_Data_Display for information to determine whether airport is IFR or VFR	Airport_Environmental_Data_Display	1
	A/O		
A1.5.2.5.2	SEARCH Surface Observation, Meterological Impact Statement on Aeronautical And Meteorological Information for data pertaining to whether a control zone is IFR or VFR		
A1.5.2.5.3	SYNTHESIZE weather information into mental weather picture *compare actual weather conditions with IFR/ VFR limits		
A1.5.2.5.4	DECIDE if control zone is IFR or VFR		
A1.5.2.6	REVIEW ATIS VOICE RECORDING		
	TASK TYPE: VC/A COORD MEDIA: FREQUENCY: MED CRITICALITY: LOW		
A1.5.2.6.1	PERFORM VSCS, Monitoring ATIS Voice Recordings *review of ATIS stored data*		
A1.5.2.7	FORWARD RUNWAY USE DATA		
	TASK TYPE: E/VC COORD MEDIA: V/M FREQUENCY: LOW CRITICALITY: MED		
A1.5.2.7.1	PERFORM VSCS, Initiating G/G Communications *runway use data*		
	A/O		
A1.5.2.7.2	PERFORM TEM M.2, Sending ATC Mail *runway use data*		
A1.5.2.9	RECEIVE RUNWAY USE DATA		
	TASK TYPE: R/VC COORD MEDIA: V/F/M FREQUENCY: LOW CRITICALITY: HI		
A1.5.2.9.1	ACQUIRE _Airport_Environmental_Data_Display for Runway In Use Information	Airport_Environmental_Data_Display	1
	O		
A1.5.2.9.2	PERFORM VSCS, Receiving G/G Communications *runway in use data*		
	A/O		
A1.5.2.9.3	PERFORM TEM M.1, Receiving ATC Mail *runway in use data*		
A1.5.2.10	DETECT AIRPORT ENVIRONMENTAL DATA ALERT		
	TASK TYPE: R COORD MEDIA: FREQUENCY: LOW CRITICALITY: MED		
A1.5.2.10.1	ACQUIRE presence of emphasized data, _Airport_Environmental_Alert on _Airport_Environmental_Data_Display	Airport_Environmental_Alert Airport_Environmental_Data_Display	1 1
A1.5.2.11	DETERMINE FAULTY AIRPORT ENVIRONMENTAL SENSOR		
	TASK TYPE: R/A COORD MEDIA: FREQUENCY: LOW CRITICALITY: MED		
A1.5.2.11.1	ACQUIRE _Airport_Environmental_Data_Display for Airport Environmental Data	Airport_Environmental_Data_Display	1

TASK NUMBER / ELEMENT NUMBER	TASK STATEMENTS / DATA AND TASK ELEMENT STATEMENTS	OBJECTS	NO. OF OBJECTS
A1.5.2.11	DETERMINE FAULTY AIRPORT ENVIRONMENTAL SENSOR		
	TASK TYPE: R/A COORD MEDIA: FREQUENCY: LOW CRITICALITY: MED (Continued)		
A1.5.2.11.2	EVALUATE acquired data for accuracy		
A1.5.2.11.3	COMPARE acquired data to data displayed in other sources		
A1.5.2.11.4	DECIDE whether an airport sensor is faulty based upon available information		
A1.5.2.12	ENTER AIRPORT ENVIRONMENTAL SENSOR DATA OVERRIDE		
	TASK TYPE: E COORD MEDIA: FREQUENCY: LOW CRITICALITY: LOW		
A1.5.2 12.1	INITIATE _Sensor_Overide message	Sensor_Overide	1
A1.5.2.12.2	EXECUTE _Sensor_Overide message	Sensor_Overide	1
A1.5.2.12.3	DETECT results of sensor overide on the _Airport_Environmental_Data_Display	Airport_Environmental_Data_Display	1
A1.5.2.13	RECEIVE NOTICE OF FAULTY AIRPORT ENVIRONMENTAL SENSOR		
	TASK TYPE: R/VC COORD MEDIA: V/M FREQUENCY: LOW CRITICALITY: MED		
A1.5.2.13.1	PERFORM VSCS, Receiving G/G Communications *notice of faulty airport environmental sensor A/O		
A1.5.2.13.2	PERFORM TEM M.1, Receiving ATC Mail *notice of faulty airport environmental sensor*		
A1.5.2.76	RECEIVE GENERAL NATURE NOTAM		
	TASK TYPE: R COORD MEDIA: V/M FREQUENCY: LOW CRITICALITY: LOW		
A1.5.2.76.1	SEARCH Aeronautical And Meteorological Information for the presence of general nature NOTAMs		
A1.5.2.76.2	EXTRACT NOTAM information from Aeronautical And Meteorological Information *general nature NOTAM* O		
A1.5.2.76.3	PERFORM TEM M.1, Receiving ATC Mail *general nature NOTAM*		
A1.5.2.77	ACKNOWLEDGE AIRPORT ENVIRONMENTAL DATA ALERT		
	TASK TYPE: E COORD MEDIA: F FREQUENCY: LOW CRITICALITY: LOW		
A1.5.2.77.1	INITIATE _Deemphasize_Environmental_Data_Item *airport environmental alert*	Deemphasize_Environmental_Data_Item	1
A1.5.2.77.2	EXECUTE _Deemphasize_Environmental_Data_Item	Deemphasize_Environmental_Data_Item	1
A1.5.2.77.3	DETECT deemphasis of airport environmental alert		
A1.5.2.78	REVIEW DISPLAYED WEATHER INFORMATION		
	TASK TYPE: E/R/A COORD MEDIA: FREQUENCY: HI CRITICALITY: MED		
A1.5.2.78.1	ACQUIRE _Graphic_ATC_Radar_Weather on _Situation_Display for weather information A/O	Graphic_ATC_Radar_Weather Situation_Display	1 1

TASK NUMBER / ELEMENT NUMBER	TASK STATEMENTS / DATA AND TASK ELEMENT STATEMENTS	OBJECTS	NO. OF OBJECTS
A1.5.2.78	REVIEW DISPLAYED WEATHER INFORMATION		
	TASK TYPE: E/R/A COORD MEDIA: FREQUENCY: HI CRITICALITY: MED (Continued)		
A1.5.2.78.2	SEARCH Aeronautical And Meteorological Information for actual and predicted weather conditions A/O		
A1.5.2.78.3	ACQUIRE _Airport_Environmental_Data_Display for weather information	Airport_Environmental_Data_Display	1
A1.5.2.78.4	SYNTHESIZE extracted information into a mental picture of current and projected weather		
A1.6.1.1	BRIEF RELIEVING CONTROLLER		
	TASK TYPE: E/R/VC COORD MEDIA: V FREQUENCY: LOW CRITICALITY: HI		
A1.6.1.1.1	CROSS-REFERENCE _Position_Checklist on the _Static_Information_Display during relief briefing	Position_Checklist Static_Information_Display	1 1
A1.6.1.1.2	*CROSS-REFERENCE _Controller_Notepad_Display	Controller_Notepad_Display	1
A1.6.1.1.3	CROSS-REFERENCE _Situation_Display, _Flight_Data_Display, Special_Lists, and _Data_Displays	Situation_Display Flight_Data_Display Lists Data_Displays	1 1 1 4
A1.6.1.1.4	PERFORM VSCS, Recording Briefings		
A1.6.1.1.5	INFORM relieving controller *traffic picture, weather picture, systems status picture, pertinent priority text messages, controller notes, and display status*		
A1.6.1.2	SIGN OFF AT CONSOLE		
	TASK TYPE: E COORD MEDIA: FREQUENCY: LOW CRITICALITY: LOW		
A1.6.1.2.1	INITIATE _Sign_Off message *after having been properly relieved*	Sign_Off	1
A1.6.1.2.2	EXECUTE _Sign_Off message	Sign_Off	1
A1.6.1.2.3	DETECT system acceptance of Sign Off message		
A1.6.1.3	VERIFY COMPLETENESS OF RELIEF BRIEFING RECEIPT		
	TASK TYPE: R/A COORD MEDIA: FREQUENCY: LOW CRITICALITY: HI		
A1.6.1.3.1	CROSS-REFERENCE _Position_Checklist on the _Static_Information_Display to verify completeness of relief briefing	Position_Checklist Static_Information_Display	1 1
A1.6.1.3.2	ASSESS completeness of relief briefing		
A1.6.2.1	REVIEW SYSTEM STATUS TO DETERMINE CURRENCY/ UPDATE SELF		
	TASK TYPE: R/A COORD MEDIA: FREQUENCY: LOW CRITICALITY: MED		
A1.6.2.1.1	ACQUIRE _System_Status_Data_Display for information pertinent to assuming control of position	System_Status_Data_Display	1

TASK NUMBER / ELEMENT NUMBER	TASK STATEMENTS / DATA AND TASK ELEMENT STATEMENTS	OBJECTS	NO. OF OBJECTS
A1.6.2.1	REVIEW SYSTEM STATUS TO DETERMINE CURRENCY/ UPDATE SELF		
	TASK TYPE: R/A COORD MEDIA: FREQUENCY: LOW CRITICALITY: MED (Continued)		
A1.6.2.1.2	SYNTHESIZE acquired information with regard to assuming position responsibility		
A1.6.2.3	VERIFY THAT ALL REQUIRED PARAMETERS ARE IN PROPER LOCATION		
	TASK TYPE: R/A COORD MEDIA: FREQUENCY: LOW CRITICALITY: MED		
A1.6.2.3.1	SCAN each _Data_Display and display control setting for lighting levels, geographical range, altitude filter limits, and settings for other adjustable parameters	Data_Display	11
A1.6.2.3.2	COMPARE parameters on the _Data_Display with procedural requirements	Data_Display	11
A1.6.2.4	SIGN ON AT DESIGNATED CONSOLE		
	TASK TYPE: E COORD MEDIA: FREQUENCY: LOW CRITICALITY: LOW		
A1.6.2.4.1	INITIATE _Sign_On message	Sign_On	1
A1.6.2.4.2	EXECUTE _Sign_On message	Sign_On	1
A1.6.2.4.3	DETECT system acceptance of _Sign_On message	Sign_On	1
A1.6.2.5	ADJUST WORKSTATION TO PERSONAL PREFERENCE		
	TASK TYPE: E COORD MEDIA: FREQUENCY: LOW CRITICALITY: LOW		
A1.6.2.5.1	INITIATE Display Control adjustments	Physical_Display	1
A1.6.2.5.2	EXECUTE Display Control adjustments to set controller preferences		
A1.6.2.5.3	DETECT changes in appearance character/ symbol sizes, brightness, size/ shape/ location of displays, background shading, and viewports on logical and physical displays		
	A/O		
A1.6.2.5.4	PERFORM VSCS, Adjusting VSCS Displays/ Receiving Modes		
	A/O		
A1.6.2.5.5	PERFORM VSCS, Enabling VSCS Functions		
A1.6.2.5.6	ASSESS all Display Control and VSCS visual and audio settings for controller suitability		
A1.6.2.6	CHECK WORKSTATION FOR PROPER CONFIGURATION, USABILITY, AND SATISFACTORY STATUS		
	TASK TYPE: R/A COORD MEDIA: FREQUENCY: MED CRITICALITY: MED		
A1.6.2.6.1	SEARCH _Data_Display for proper location on sector suite physical displays	Data_Display	11
A1.6.2.6.2	ASSESS _Sector_Suite for proper configuration/ setting of shelf height, main display tilt, keyboard tilt, location of trackball, and Auxilliary Display lighting	Sector_Suite	1

TASK NUMBER / ELEMENT NUMBER	TASK STATEMENTS / DATA AND TASK ELEMENT STATEMENTS	OBJECTS	NO. OF OBJECTS
A1.6.2.7	SET UP WORKSTATION ADAPTATION PARAMETERS		
	TASK TYPE: E COORD MEDIA: FREQUENCY: LOW CRITICALITY: LOW		
A1.6.2.7.1	INITIATE _Console_Configuration_Edit message	Console_Configuration_Edit	1
A1.6.2.7.2	EXECUTE _Console_Configuration_Edit message	Console_Configuration_Edit	1
A1.6.2.7.3	DETECT system acceptance of _Console_Configuration_Edit	Console_Configuration_Edit	1
A1.6.2.8	REVIEW BRIEFING CHECKLIST/ NOTES TO ASSURE COMPLETENESS OF BRIEFING COVERAGE		
	TASK TYPE:E/R/A/VC COORD MEDIA: FREQUENCY: LOW CRITICALITY: MED		
A1.6.2.8.1	SCAN information on _Controller_Notepad_Display	Controller_Notepad_Display	1
A1.6.2.8.2	EXTRACT _Free-Form_Text_Item from _Controller_Notepad_Display	Free-Form_Text_Item Controller_Notepad_Display	1 1
A1.6.2.8.3	CROSS-REFERENCE pertinent data from _Position_Checklist in _Static_Information_Display	Position_Checklist Static_Information_Display	1 1
A1.6.2.8.4	*REQUEST clarification of data using input message(s) or voice		
A1.6.2.8.5	INTEGRATE extracted information with regard to assuming position responsibility		
A1.6.2.8.6	EVALUATE completeness of information with regard to assuming position responsibility		
A1.6.2.8.7	*REQUEST clarification of data using input message(s) or voice		
A1.6.2.9	REQUEST IMPLEMENTATION OF PROGRAMMED PERSONAL PREFERENCE ADJUSTMENTS		
	TASK TYPE: E COORD MEDIA: FREQUENCY: LOW CRITICALITY: LOW		
A1.6.2.9.1	INITIATE _Display/Invoke_Display_Preference_Set message	Display/Invoke_Display_Preference_Set	1
A1.6.2.9.2	EXECUTE _Display/Invoke_Preference_Set message	Display/Invoke_Preference_Set	1
A1.6.2.9.3	DETECT system acceptance of appropriate preference set		
A1.6.2.10	DETERMINE IF READY TO ACCEPT CONTROL RESPONSIBILITY		
	TASK TYPE: A COORD MEDIA: FREQUENCY: LOW CRITICALITY: HI		
A1.6.2.10.1	DECIDE whether or not to assume position responsibility based on the information available		
A1.6.2.75	REVIEW CURRENT AND PROJECTED TRAFFIC STATUS/ WEATHER		
	TASK TYPE: R/A COORD MEDIA: FREQUENCY: MED CRITICALITY: HI		
A1.6.2.75.1	SEARCH _Position_Symbol, _Data_Block, _Background_Descriptor, _Weather_Descriptor on _Situation_Display to determine current and projected traffic/ weather	Position_Symbol Data_Block Background_Descriptor Weather_Descriptor Situation_Display	30 27 1 2 1

TASK NUMBER / ELEMENT NUMBER	TASK STATEMENTS / DATA AND TASK ELEMENT STATEMENTS	OBJECTS	NO. OF OBJECTS
A1.6.2.75	REVIEW CURRENT AND PROJECTED TRAFFIC STATUS/ WEATHER		
	TASK TYPE: R/A COORD MEDIA: FREQUENCY: MED CRITICALI : HI (Continued)		
A1.6.2.75.2	PERCEIVE plan view mental traffic picture from _Target_Position_Symbol, _Track_Position_Symbol, _Position_History_Data, _Track_Vector, _Aircraft_Halo on Situation Display	Target_Position_Symbol Track_Position_Symbol Position_History_Data Track_Vector Aircraft_Halo	30 27 27 27 2
	A/O		
A1.6.2.75.3	SEARCH _Flight_Data_Entry, _Time on _Flight_Data_Display for information pertaining to actual and projected traffic load	Flight_Data_Entry Time Flight_Data_Display	20 1 1
	A/O		
A1.6.2.75.4	SEARCH _Special_Lists for information to aid determination of projected traffic	Special_Lists	1
	A/O		
A1.6.2.75.5	SEARCH _Weather_Descriptor on _Situation_Display for actual and predicted weather conditions	Weather_Descriptor Situation_Display	1 1
	A/O		
A1.6.2.75.6	SEARCH Aeronautical And Meteorological Information for actual and predicted weather conditions		
	A/O		
A1.6.2.75.7	SEARCH _Airport_Environmental_Data_Display for actual weather conditions	Airport_Environmental_Data_Display	1
A1.6.2.75.8	SEARCH Traffic Management Information for flow constraints		
A1.6.2.75.9	SYNTHESIZE extracted information into a mental picture of current and projected traffic and weather status		
A1.6.3.1	DETECT NON-ACCEPTANCE OF INPUT DATA		
	TASK TYPE: R/A COORD MEDIA: FREQUENCY: LOW CRITICALITY: HI		
A1.6.3.1.1	RECOGNIZE lack of feedback/ system response to control and/ or data inputs		
	O		
A1.6.3.1.2	SCAN _Message_Composition_And_Response_Display for status of input data and messages	Message_Composition_And_Response_Display	1
A1.6.3.1.3	DETECT _Message_Reject_Indicator or _Message_Error_Indicator on _Message_Composition_And_Response_Displa	Message_Reject_Indicator Message_Error_Indicator Message_Composition_And_Response_Display	1 1 1
A1.6.3.2	INFORM SUPERVISOR OF TRANSIENT EQUIPMENT FAILURE		
	TASK TYPE: E/C COORD MEDIA: V/M FREQUENCY: LOW CRITICALITY: MED		
A1.6.3.2.1	PERFORM VSCS, Initiating C/G Communications *transient equipment failure advisory*		
	A/O		
A1.6.3.2.2	PERFORM TEM M.2, Sending ATC Mail *notice of transient equipment failure*		
A1.6.4.1	DETECT OCCURRENCE OF SECTOR SUITE FAILURE		
	TASK TYPE: R/A COORD MEDIA: FREQUENCY: LOW CRITICALITY: HI		
A1.6.4.1.1	SEARCH _Data_Display on Sector Suite for proper system functioning	Data_Display	16

TASK NUMBER / ELEMENT NUMBER	TASK STATEMENTS / DATA AND TASK ELEMENT STATEMENTS	OBJECTS	NO. OF OBJECTS
A1.6.4.1	DETECT OCCURRENCE OF SECTOR SUITE FAILURE		
	TASK TYPE: R/A COORD MEDIA: FREQUENCY: LOW CRITICALITY: HI (Continued)		
A1.6.4.1.2	RECOGNIZE degradation in resolution of displayed data in any or all displays		
A1.6.4.1.3	RECOGNIZE degradation in accuracy of displayed data in any or all displays		
A1.6.4.1.4	RECOGNIZE lack of feedback/ system response to control and/ or data inputs		
A1.6.4.2	OBSERVE SECTOR SUITE DATA BASE RESTORATION COMPLETION MESSAGE		
	TASK TYPE: R COORD MEDIA: FREQUENCY: LOW CRITICALITY: HI		
A1.6.4.2.1	SEARCH _Data_Display for proper restoration of data base	Data_Display	16
A1.6.4.2.2	RECOGNIZE proper restoration of data on _Data_Display	Data_Display	16
A1.6.4.2.3	DETECT restoration notification on _System_Status_Data_Display	System_Status_Data_Display	1
A1.6.4.3	FORWARD NOTICE OF EQUIPMENT STATUS		
	TASK TYPE: E/VC COORD MEDIA: V/M FREQUENCY: LOW CRITICALITY: HI		
A1.6.4.3.1	PERFORM VSCS, Initiating G/G Communications *notice of equipment status*		
	A/O		
A1.6.4.3.2	PERFORM TEM M.2, Sending ATC Mail *notice of equipment status*		
A1.6.4.4	RECEIVE STATUS OF SECTOR SUITE FAILURE FROM CONTROLLER / SUPERVISOR		
	TASK TYPE: R/VC COORD MEDIA: V/M FREQUENCY: LOW CRITICALITY: HI		
A1.6.4.4.1	PERFORM VSCS, Receiving G/G Communications *status of sector suite failure*		
	A/O		
A1.6.4.4.2	PERFORM TEM M.1, Receiving ATC Mail *status of sector suite failure*		
A1.6.4.5	REQUEST SPECIFIED DISPLAY DATA BE PRESENTED ON AND CONTROLLED AT A SPECIFIC COMMON CONSOLE		
	TASK TYPE: E COORD MEDIA: FREQUENCY: LOW CRITICALITY: HI		
A1.6.4.5.1	INITIATE _Request_Assignment_Of_Logical _Display_To_One_Physical_Display message	Request_Assignment_Of_Logical_Display_To_One_ Display	1 1
A1.6.4.5.2	EXECUTE _Request_Assignment_Of_Logical_ Display_To_One_Physical_Display message	Request_Assignment_Of_Logical_Display_To_One_ Display	1 1
A1.6.4.5.3	DETECT _Data_Display at designated _Physical_Display	Data_Display Physical_Display	1 1
A1.6.5.4	VERIFY COMPUTER ACTION DURING TRANSITION STAGES		
	TASK TYPE: E/R/VC COORD MEDIA: V FREQUENCY: LOW CRITICALITY: HI		
A1.6.5.4.1	ACQUIRE _Situation_Display to verify that all targets under controller's jurisdiction are properly identified	Situation_Display	1

TASK NUMBER / ELEMENT NUMBER	TASK STATEMENTS / DATA AND TASK ELEMENT STATEMENTS	OBJECTS	NO. OF OBJECTS
A1.6.5.4	VERIFY COMPUTER ACTION DURING TRANSITION STAGES		
	TASK TYPE: E/D/VC COORD MEDIA: V FREQUENCY: LOW CRITICALITY: HI (Continued)		
A1.6.5.4.2	RECOGNIZE that _Data_Block are properly associated with _Position_Symbol	Data_Block Position_Symbol	27 27
A1.6.5.4.3	ACQUIRE _Flight_Data_Entry, _Time on _Flight_Data_Display to verify that data are consistent with data on Situation Display	Flight_Data_Entry Time Flight_Data_Display	20 1 1
A1.6.5.4.4	COMPARE Computer IDs, Callsigns, Time, and Altitude Information of _Flight_Data_Entries with _Full_Data_Blocks and _Position_Symbols on Situation Display	Flight_Data_Entries Full_Data_Blocks Position_Symbols	20 27 27
A1.6.5.4.5	EVALUATE all computer responses during transitions between TAAS and backup modes		
A1.6.5.4.6	PERFORM VSCS, Initiating G/G Communications *advise supervisor or Airway Facilities of current system status*		
	A/O		
A1.6.5.4.7	PERFORM VSCS, Receiving G/G Communications *information from supervisor or Airway Facilities regarding computer transition status*		
A1.6.5.6	RECEIVE CONFIRMATION OF COMPUTER ACTION DURING TRANSITION STAGES		
	TASK TYPE: VC COORD MEDIA: V FREQUENCY: LOW CRITICALITY: HI		
A1.6.5.6.1	PERFORM VSCS, Initiating G/G Communications *verify computer actions interfacility and intrafacility during transition stages*		
	A/O		
A1.6.5.6.2	PERFORM VSCS, Receiving G/G Communications *verification of computer actions during transition stages*		
A1.6.5.75	DETECT OCCURRENCE OF TAAS FAILURE		
	TASK TYPE: R/A COORD MEDIA: FREQUENCY: LOW CRITICALITY: HI		
A1.6.5.75.1	SEARCH _System_Status_Data_Display for the status of the TAAS system	System_Status_Data_Display	1
A1.6.5.75.2	DETECT _Operational_Function_Degradation/Failure on _System_Status_Data_Display	Operational_Function_Degradation/Failure System_Status_Data_Display	1 1
	A/O		
A1.6.5.75.3	DETECT _Reduced_Capability_Mode_Indicator on _System_Status_Data_Display	Reduced_Capability_Mode_Indicator System_Status_Data_Display	1 1
A1.6.5.76	REVERT TO TAAS BACKUP PROCEDURES (TBD)		
	TASK TYPE: TBD COORD MEDIA: V FREQUENCY: LOW CRITICALITY: HI		
A1.6.5.76.0	TBD facility directives/procedures		
A1.6.5.77	REVERT TO TAAS EMERGENCY MODE PROCEDURES (TBD)		
	TASK TYPE: TBD COORD MEDIA: V FREQUENCY: LOW CRITICALITY: HI		
A1.6.5.77.0	TBD facility directives/procedures		

TASK NUMBER / ELEMENT NUMBER	TASK STATEMENTS / DATA AND TASK ELEMENT STATEMENTS	OBJECTS	NO. OF OBJECTS
A1.6.5.78	REVERT TO TAAS REDUCED CAPABILITY MODE PROCEDURES (TBD)		
	TASK TYPE: TBD COORD MEDIA: V FREQUENCY: LOW CRITICALITY: HI		
A1.6.5.78.Ø	TBD facility procedures/directives		
A1.6.6.1	DETERMINE AIRCRAFT NEEDING SUBSTITUTE ROUTING		
	TASK TYPE: R/A COORD MEDIA: FREQUENCY: LOW CRITICALITY: MED		
A1.6.6.1.1	ACQUIRE _Flight_Data_Entry, _Time on _Flight_Data_Display *for aircraft needing substitute routing due to NAVAID failure*	Flight_Data_Entry Time Flight_Data_Display	2Ø 1 1
A1.6.6.1.2	SEARCH _System_Status_Data_Display for status of NAVAID	System_Status_Data_Display	1
A1.6.6.1.3	ACQUIRE _Inbound_List and _Departure_List in _Special_Lists for information on aircraft which may be affected by NAVAID outage	Inbound_List Departure_List Special_Lists	1 1 1
A1.6.6.1.4	DECIDE aircraft that will require substitute routing		
A1.6.6.2	REVIEW STATUS OF QUESTIONABLE NAVAID		
	TASK TYPE: R/VC COORD MEDIA: V/F FREQUENCY: LOW CRITICALITY: LOW		
A1.6.6.2.1	ACQUIRE _Equipment_Status on the _System_Status_Data_Display for status of NAVAID equipment	Equipment_Status System_Status_Data_Display	1 1
A1.6.6.2.2	PERFORM VSCS, Initiating G/G Communications *request for maintenance, FSS, ATCT, or supervisor confirmation of NAVAID outage* A/O		
A1.6.6.2.3	PERFORM VSCS, Receiving G/G Communications *maintenace, FSS, ATCT, or supervisor confirmation of NAVAID outage* A/O		
A1.6.6.2.4	PERFORM VSCS, Communicating Normally Air-To-Ground *asking pilot for confirmation of NAVAID outage*		
A1.6.6.2.5	PERFORM VSCS, Communicating Normally Air-To-Ground *pilot reports status of NAVAID*		
A1.6.6.3	OBSERVE SUBSTITUTE ROUTING ON DISPLAY		
	TASK TYPE: R COORD MEDIA: FREQUENCY: LOW CRITICALITY: LOW		
A1.6.6.3.1	ACQUIRE _Substitute_Routing from _Static_Information_Display O	Substitute_Routing Static_Information_Display	1 1
A1.6.6.3.2	ACQUIRE _Usage_Of_Adapted_Routes on _System_Status_Data_Display	Usage_Of_Adapted_Routes System_Status_Data_Display	1 1
A1.6.6.4	RECEIVE NOTICE OF NAVAID STATUS		
	TASK TYPE: R/VC COORD MEDIA: V/M FREQUENCY: LOW CRITICALITY: MED		
A1.6.6.4.1	PERFORM VSCS, Receiving G/G Communications *notice of NAVAID status* A/O		

TASK NUMBER / ELEMENT NUMBER	TASK STATEMENTS / DATA AND TASK ELEMENT STATEMENTS	OBJECTS	NO. OF OBJECTS
A1.6.6.4	RECEIVE NOTICE OF NAVAID STATUS		
	TASK TYPE: R/VC COORD MEDIA: V/M FREQUENCY: LOW CRITICALITY: MED (Continued)		
A1.6.6.4.2	PERFORM TEM M.1, Receiving ATC Mail *notice of NAVAID status* A/O		
A1.6.6.4.3	PERFORM VSCS, Communicating Normally Air-To-Ground *receiving information from pilot regarding status of NAVAIDs*		
A1.6.6.5	RECEIVE SUBSTITUTE ROUTING		
	TASK TYPE: R/VC COORD MEDIA: V/M FREQUENCY: LOW CRITICALITY: MED		
A1.6.6.5.1	PERFORM VSCS, Receiving G/G Communications *substitute routing* A/O		
A1.6.6.5.2	PERFORM TEM M.1, Receiving ATC Mail *substitute routing*		
A1.6.6.6	RECEIVE CANCELLATION OF SUBSTITUTE ROUTING		
	TASK TYPE: R/VC COORD MEDIA: V/M FREQUENCY: LOW CRITICALITY. MED		
A1.6.6.6.1	PERFORM VSCS, Receiving G/G Communications *cancel substitute routing* A/O		
A1.6.6.6.2	PERFORM TEM M.1, Receiving ATC Mail *cancel substitute routing*		
A1.6.6.7	FORWARD NAVAID STATUS TO ANOTHER CONTROLLER/ SUPERVISOR/ PILOT		
	TASK TYPE. E/VC COORD MEDIA: V/M FREQUENCY: LOW CRITICALITY: MED		
A1.6.6.7.1	PERFORM VSCS, Initiating G/G Communications *NAVAID status* A/O		
A1.6.6.7.2	PERFORM TEM M.1, Sending ATC Mail *NAVAID status* A/O		
A1.6.6.7.3	PERFORM VSCS, Communicating Normally Air-To-Ground *NAVAID status*		
A1.6.6.8	FORWARD SUBSTITUTE ROUTING		
	TASK TYPE: E/VC COORD MEDIA: V/M FREQUENCY: LOW CRITICALITY: HI		
A1.6.6.8.1	PERFORM VSCS, Initiating G/G Communications *substitute routing* A/O		
A1.6.6.8.2	PERFORM TEM M.2, Sending ATC Mail *substitute routing*		
A1.6.6.8.3	PERFORM VSCS, Communicating Normally Air-To-Ground *substitute routing*		
A1.6.6.9	DELETE PREVIOUS SUBSTITUTE ROUTING		
	TASK TYPE: E/VC COORD MEDIA: V/M FREQUENCY: LOW CRITICALITY: MED		
A1.6.6.9.1	PERFORM VSCS, Initiating G/G Communications *delete previous substitute routing* A/O		

TASK NUMBER / ELEMENT NUMBER	TASK STATEMENTS / DATA AND TASK ELEMENT STATEMENTS	OBJECTS	NO. OF OBJECTS
A1.6.6.9	DELETE PREVIOUS SUBSTITUTE ROUTING		
	TASK TYPE: E/VC COORD MEDIA: V/M FREQUENCY: LOW CRITICALITY: MED (Continued)		
A1.6.6.9.2	PERFORM TEM M.2, Sending ATC Mail *delete previous substitute routing* A/O		
A1.6.6.9.3	PERFORM VSCS, Communicating Normally Air-To-Ground *issue clearance deleting previously cleared route*		
A1.6.6.10	DISCUSS APPROPRIATENESS WITH SUPERVISOR OF RELEASING EQUIPMENT TO MAINTENANCE		
	TASK TYPE: A/VC COORD MEDIA: V FREQUENCY: LOW CRITICALITY: LOW		
A1.6.6.10.1	SYNTHESIZE weather, traffic management, and airport information into mental picture of current and projected traffic and weather status		
A1.6.6.10.2	ASSESS feasibility and impact of releasing equipment on the basis of current and projected workload, traffic, and weather		
A1.6.6.10.3	PERFORM VSCS, Initiating G/G Communications *discuss with supervisor appropriateness of releasing equipment to maintenance*		
A1.6.6.10.4	PERFORM VSCS, Receiving G/G Communications *discuss with supervisor appropriateness of releasing equipment to maintenance*		
A1.6.6.11	REVIEW NEED/ CANCELLATION OF SUBSTITUTE ROUTING WITH SUPERVISOR		
	TASK TYPE: A/VC COORD MEDIA: V FREQUENCY: LOW CRITICALITY: LOW		
A1.6.6.11.1	EVALUATE need for substitute routing		
A1.6.6.11.2	PERFORM VSCS, Initiating G/G Communications *need to cancel or to implement substitute routing*		
A1.6.6.11.3	PERFORM VSCS, Receiving G/G Communications *need to implement or to cancel substitute routing		
A1.6.6.12	RECEIVE SUPERVISOR NOTICE OF EQUIPMENT RELEASED TO MAINTENANCE		
	TASK TYPE: R/VC COORD MEDIA: V/M FREQUENCY: LOW CRITICALITY: MED		
A1.6.6.12.1	PERFORM VSCS, Receiving G/G Communications *notice from supervisor of release status of equipment* O		
A1.6.6.12.2	PERFORM TEM M.1, Receiving ATC Mail *notice from supervisor of release status of equipment*		
A1.6.7.1	DETECT COMMUNICATION FAILURE		
	TASK TYPE: VC/A COORD MEDIA: FREQUENCY: LOW CRITICALITY: HI		
A1.6.7.1.1	PERFORM VSCS, Initiating G/G Communications *problems in initiating a ground-to-ground call* O		

TASK NUMBER / ELEMENT NUMBER	TASK STATEMENTS / DATA AND TASK ELEMENT STATEMENTS	OBJECTS	NO. OF OBJECTS
A1.6.7.1	DETECT COMMUNICATION FAILURE		
	TASK TYPE: VC/A COORD MEDIA: FREQUENCY: LOW CRITICALITY: HI (Continued)		
A1.6.7.1.2	PERFORM VSCS, Receiving G/G Communications *problem receiving or answering a ground-to-ground call*		0
A1.6.7.1.3	PERFORM VSCS, Communicating Normally Air-To-Ground *problems receiving or transmitting air-to-ground communications*		
A1.6.7.1.4	PERFORM VSCS, Broadcasting Pre-Recorded Weather Information *problem with broadcasting*		0
A1.6.7.1.5	PERFORM VSCS, Monitoring ATIS Voice Recording *problem monitoring ATIS*		
A1.6.7.1.6	RECOGNIZE malfunction in VSCS system which degrades or prevents communication capabilities		
A1.6.7.2	FORWARD ALTERNATE COMMUNICATION PATH		
	TASK TYPE: E/VC COORD MEDIA: V/M FREQUENCY: LOW CRITICALITY: HI		
A1.6.7.2.1	PERFORM VSCS, Initiating G/G Communications *notice of alternate communications path*		0
A1.6.7.2.2	PERFORM TEM M.2, Sending ATC Mail *notice of alternate communications path*		
A1.6.7.3	RECEIVE NEW FREQUENCY ASSIGNMENT		
	TASK TYPE: R/VC COORD MEDIA: V/M FREQUENCY: LOW CRITICALITY: HI		
A1.6.7.3.1	PERFORM VSCS, Receiving G/G Communications *notice of new frequency*		0
A1.6.7.3.2	PERFORM TEM M.1, Receiving ATC Mail *notice of new frequency*		
A1.6.7.4	FORWARD NOTICE OF COMMUNICATION STATUS		
	TASK TYPE: E/VC COORD MEDIA: V/M FREQUENCY: LOW CRITICALITY: MED		
A1.6.7.4.1	PERFORM VSCS, Initiating G/G Communications *communications status*		0
A1.6.7.4.2	PERFORM TEM M.2, Sending ATC Mail *communications Status*		
A1.6.7.5	FORWARD NEW FREQUENCY ASSIGNMENT TO ANOTHER CONTROLLER/SUPERVISOR		
	TASK TYPE: E/VC COORD MEDIA: V/M FREQUENCY: LOW CRITICALITY: HI		
A1.6.7.5.1	PERFORM VSCS, Initiating G/G Communications *advising of new frequency*		0
A1.6.7.5.2	PERFORM TEM M.2, Sending ATC Mail *advising of new frequency*		0

TASK NUMBER / ELEMENT NUMBER	TASK STATEMENTS / DATA AND TASK ELEMENT STATEMENTS	OBJECTS	NO. OF OBJECTS
A1.6.7.5	FORWARD NEW FREQUENCY ASSIGNMENT TO ANOTHER CONTROLLER/SUPERVISOR		
	TASK TYPE: E/VC COORD MEDIA: V/M FREQUENCY: LOW CRITICALITY: HI (Continued)		
A1.6.7.5.3	PERFORM VSCS, Communicating Normally Air-To-Ground *advising of new frequency*		
A1.6.7.6	RECEIVE NOTICE OF ALTERNATE COMMUNICATION PATH		
	TASK TYPE: R/VC COORD MEDIA: V/M FREQUENCY: LOW CRITICALITY: HI		
A1.6.7.6.1	PERFORM VSCS, Receiving G/G Communications *alternate communications path*		
	O		
A1.6.7.6.2	PERFORM TEM M.1, Receiving ATC Mail *alternate communications path*		
A1.6.8.1	DETERMINE IMPENDING CONTROLLER OVERLOAD		
	TASK TYPE: A COORD MEDIA: FREQUENCY: LOW CRITICALITY: HI		
A1.6.8.1.1	SEARCH _Position_Symbol, _Data_Block, _Background_Descriptor, _Weather_Descriptor on _Situation_Display to determine current and projected workload levels	Position_Symbol Data_Block Background_Descriptor Weather_Descriptor Situation_Display	30 27 1 2 1
	A/O		
A1.6.8.1.2	ACQUIRE _Flight_Data_Entry, _Time on _Flight_Data_Display for information pertaining to actual and projected workload levels	Flight_Data_Entry Time Flight_Data_Display	20 1 1
	A/O		
A1.6.8.1.3	ACQUIRE _Airport_Environmental_Data_Display for current weather conditions	Airport_Environmental_Data_Display	1
	A/O		
A1.6.8.1.4	ACQUIRE Aeronautical And Meteorological Information for actual and predicted weather conditions to aid in determining current and projected workload levels		
A1.6.8.1.5	ACQUIRE Traffic Management Information for flow constraints		
A1.6.8.1.6	SYNTHESIZE all traffic and weather information into a mental picture of current and projected workload levels		
A1.6.8.1.7	ASSESS individual workload		
A1.6.8.3	REQUEST ASSISTANCE OR RELIEF		
	TASK TYPE: E/VC COORD MEDIA: V/M FREQUENCY: LOW CRITICALITY: HI		
A1.6.8.3.1	PERFORM VSCS, Initiating G/G Communications *request assistance or relief*		
	O		
A1.6.8.3.2	PERFORM TEM M.2, Sending ATC Mail *request assistance or relief*		
A1.6.8.4	REQUEST FLOW CONTROL BE IMPOSED		
	TASK TYPE: E/VC COORD MEDIA: V/M FREQUENCY: LOW CRITICALITY: HI		
A1.6.8.4.1	PERFORM VSCS, Initiating G/G Communications *request flow control be imposed*		
	O		

TASK NUMBER / ELEMENT NUMBER	TASK STATEMENTS / DATA AND TASK ELEMENT STATEMENTS	OBJECTS	NO. OF OBJECTS
A1.6.8.4	REQUEST FLOW CONTROL BE IMPOSED		
	TASK TYPE: E/VC COORD MEDIA: V/M FREQUENCY: LOW CRITICALITY: HI (Continued)		
A1.6.8.4.2	PERFORM TEM M.2, Sending ATC Mail *request flow control be imposed*		
A1.6.9.1	INFORM PILOT OF RADAR CONTACT LOST		
	TASK TYPE: VC COORD MEDIA: V FREQUENCY: LOW CRITICALITY: MED		
A1.6.9.1.1	PERFORM VSCS, Communicating Normally Air-To- Ground *radar contact lost*		
A1.6.9.2	REASSOCIATE DATA BLOCK		
	TASK TYPE: E COORD MEDIA: FREQUENCY: LOW CRITICALITY: MED		
A1.6.9.2.1	INITIATE _Track_Reposition message	Track_Reposition	1
A1.6.9.2.2	EXECUTE _Track_Reposition message	Track_Reposition	1
A1.6.9.2.3	DETECT _Data_Block reassociated with _Position_Symbol on _Situation_Display	Data_Block Position_Symbol Situation_Display	1 1 1
A1.6.9.3	OBSERVE DATA BLOCK NOT ASSOCIATED WITH TARGET		
	TASK TYPE: R COORD MEDIA: FREQUENCY: LOW CRITICALITY: MED		
A1.6.9.3.1	SEARCH _Situation_Display to verify that _Data_Block is associated with _Position_Symbol_Data	Situation_Display Data_Block Position_Symbol_Data	1 27 50
A1.6.9.3.2	DETECT _Data_Block nonassociation with _Position_Symbol on _Situation_Display	Data_Block Position_Symbol Situation_Display	1 1 1
A1.6.9.4	TERMINATE RADAR SERVICE TO AIRCRAFT		
	TASK TYPE: VC COORD MEDIA: V FREQUENCY: LOW CRITICALITY: MED		
A1.6.9..1	PERFORM VSCS, Communicating Normally Air-To-Ground *termination of radar service*		
A1.6.9.5	INITIATE USE OF NON-RADAR SEPARATION STANDARDS		
	TASK TYPE: R/A COORD MEDIA: FREQUENCY: LOW CRITICALITY: HI		
A1.6.9.5.1	ACQUIRE _Flight_Data_Entry, _Time on _Flight_Data_Display for information pertaining to aircraft separation	Flight_Data_Entry Time Flight_Data_Display	20 1 1
A1.6.9.5.2	SYNTHESIZE position, route, speed, altitude, aircraft, and time information into a mental picture of aircraft separation		
A1.6.9.5.3	RECOGNIZE aircraft paths warranting further close monitoring and evaluation A/D		
A1.6.9.5.4	INITIATE _FDE_And_Data_Field_Emphasis message for application to aircraft requiring close monitoring	FDE_And_Data_Field_Emphasis	1

TASK NUMBER / ELEMENT NUMBER	TASK STATEMENTS / DATA AND TASK ELEMENT STATEMENTS	OBJECTS	NO. OF OBJECTS
A1.6.9.5	INITIATE USE OF NON-RADAR SEPARATION STANDARDS		
	TASK TYPE: R/A COORD MEDIA: FREQUENCY: LOW CRITICALITY: HI (Continued)		
A1.6.9.5.5	EXECUTE _FDE_And_Data_Field_Emphasis message *change appearance of field for visual emphasis*	FDE_And_Data_Field_Emphasis	1
A1.6.9.5.6	DETECT Emphasized information in _Flight_Data_Entry *results of emphasize flight data entry message*	Flight_Data_Entry	2
A1.6.9.7	INITIATE USE OF RADAR SEPARATION STANDARDS		
	TASK TYPE: R/A COORD MEDIA: FREQUENCY: LOW CRITICALITY: MED		
A1.6.9.7.1	SCAN _Target/Track_Descriptor on the _Situation_Display	Target/Track_Descriptor Situation_Display	27 1
A1.6.9.7.2	DETECT _Position_Symbol or _Data_Block on the _Situation_Display entering an area of radar coverage but not under radar contact	Position_Symbol Data_Block Situation_Display	1 1 1
A1.6.9.7.3	INITIATE _Track message *to initiate a track on an aircraft	Track	1
A1.6.9.7.4	EXECUTE _Track message	Track	1
A1.6.9.7.5	DETECT appearance of _Full_Data_Block for appropriate aircraft on _Situation_Display A/O	Full_Data_Block Situation_Display	1 1
A1.6.9.7.6	PERFORM VSCS, Communicating Normally Air-To Ground *request pilot to squawk ident*		
A1.6.9.7.7	SEARCH _Situation_Display for _Ident_Indicator in the _Target_Position_Indicator	Situation_Display Ident_Indicator Target_Position_Indicator	1 1 1
A1.6.9.7.8	DETECT _Ident_Indicator in _Target_Position_Symbol on Situation Display	Ident_Indicator Target_Position_Symbol	1 1
A1.6.9.7.9	EXTRACT _Callsign from _Full_Data_Block of aircraft squawking "ident"	Callsign Full_Data_Block	1 1
A1.6.9.8	REQUEST PILOT POSITION REPORTS		
	TASK TYPE: VC COORD MEDIA: V FREQUENCY: LOW CRITICALITY: HI		
A1.6.9.8.1	PERFORM VSCS, Communicating Normally Air-To-Ground *request pilot position reports* O		
A1.6.9.8.2	PERFORM VSCS, Initiating G/G Communications *request flight service station, ARINC, ATCT, or company radio to relay request for pilot position reports*		
A1.6.9.9	OBSERVE RETURN OF NORMAL RADAR ENVIRONMENT		
	TASK TYPE: R/A COORD MEDIA: FREQUENCY: LOW CRITICALITY: HI		
A1.6.9.9.1	SCAN _Position_Symbol, _Data_Block on _Situation_Display *to determine if radar presentation has returned to normal*	Position_Symbol Data_Block Situation_Display	30 27 1

TASK NUMBER / ELEMENT NUMBER	TASK STATEMENTS / DATA AND TASK ELEMENT STATEMENTS	OBJECTS	NO. OF OBJECTS
A1.6.9.9	OBSERVE RETURN OF NORMAL RADAR ENVIRONMENT		
	TASK TYPE: R/A COORD MEDIA: FREQUENCY: LOW CRITICALITY: HI (Continued)		
A1.6.9.9.2	RECOGNIZE that radar capabilities have returned to normal		
A1.6.9.10	OBSERVE AIRCRAFT TRACK IN COAST MODE		
	TASK TYPE: R COORD MEDIA: FREQUENCY: LOW CRITICALITY: HI		
A1.6.9.10.1	ACQUIRE _Position_Symbol, _Data_Block on _Sitation_Display *for aircraft in coast mode*	Position_Symbol Data_Block Sitation_Display	30 27 1
A1.6.9.75	REQUEST READOUT OF ASSIGNED/ REPORTED BEACON CODE		
	TASK TYPE: E/R/A COORD MEDIA: FREQUENCY: LOW CRITICALITY: MED		
A1.6.9.75.1	INITIATE _Query_Data_Base_For_Readout message *beacon code*	Query_Data_Base_For_Readout	1
A1.6.9.75.2	EXECUTE _Query_Data_Base_For_Readout message	Query_Data_Base_For_Readout	1
A1.6.9.75.3	DETECT _Assigned/Reported_Beacon_Code in _Message_Composition_And_Response_Display	Assigned/Reported_Beacon_Code Message_Composition_And_Response_Display	1 1
A1.6.10.1	OBSERVE MESSAGE ON LOSS OF FLIGHT PLAN DATA BASE		
	TASK TYPE: R COORD MEDIA: FREQUENCY: LOW CRITICALITY: HI		
A1.6.10.1.1	ACQUIRE _Computer_Outage_Data on _System_Status_Data_Display *for indication of computer outage effecting flight plan data base	Computer_Outage_Data System_Status_Data_Display	1 1
A1.6.10.2	DETECT FAILURE TO UPDATE FLIGHT PLAN DATA BASE		
	TASK TYPE: R/A COORD MEDIA: FREQUENCY: LOW CRITICALITY: HI		
A1.6.10.2.1	SEARCH _Flight_Data_Entry on _Flight_Data_Display *to verify that flight plan data base is being updated*	Flight_Data_Entry Flight_Data_Display	20 1
A1.6.10.2.2	RECOGNIZE that _Flight_Data_Entry is not being updated	Flight_Data_Entry	1
A1.6.10.3	ENTER DISPLAY AMENDMENT MESSAGE ON CONSOLE		
	TASK TYPE: E COORD MEDIA: FREQUENCY: LOW CRITICALITY: HI		
A1.6.10.3.1	INITIATE _Flight_Data_Amendment message *in reduced capability or emergency mode*	Flight_Data_Amendment	1
A1.6.10.3.2	EXECUTE _Flight_Data_Amendment message	Flight_Data_Amendment	1
A1.6.10.3.3	DETECT acceptance of _New_Data in appropriate field of _Flight_Data_Entry	New_Data Flight_Data_Entry	1 1
A1.6.10.4	ENTER FLIGHT PLAN ON CONSOLE		
	TASK TYPE: E COORD MEDIA: FREQUENCY: LOW CRITICALITY: HI		
A1.6.10.4.1	INITIATE _Flight_Plan message *in reduced capability or emergency mode*	Flight_Plan	1

TASK NUMBER / ELEMENT NUMBER	TASK STATEMENTS / DATA AND TASK ELEMENT STATEMENTS	OBJECTS	NO. OF OBJECTS
A1.6.10.4	ENTER FLIGHT PLAN ON CONSOLE		
	TASK TYPE: E COORD MEDIA: FREQUENCY: LOW CRITICALITY: HI (Continued)		
A1.6.10.4.2	EXECUTE _Flight_Plan message	Flight_Plan	1
A1.6.10.4.3	DETECT system acceptance of _Flight_Plan message	Flight_Plan	1
A1.6.10.5	VERIFY FLIGHT PLAN DATA BASE TRANSITION ACTIVITIES		
	TASK TYPE: E/R/VC COORD MEDIA: V/M FREQUENCY: LOW CRITICALITY: MED		
A1.6.10.5.1	ACQUIRE _Full_Data_Block on _Situation_Display for verification of flight data accuracy during transition	Full_Data_Block Situation_Display	15 1
A1.6.10.5.2	PERFORM VSCS, Initiating G/G Communications *query other controllers, supervisor, and/ or system engineer to verify flight plan data base*		
	A/O		
A1.6.10.5.3	PERFORM VSCS, Receiving G/G Communications *receive flight plan data base information from other controllers, supervisor, and/ or system engineer*		
	O		
A1.6.10.5.4	PERFORM TEM M.2, Sending ATC Mail *query other controllers, supervisor, or system engineer about flight plan data base*		
	A/O		
A1.6.10.5.5	PERFORM TEM M.1, Receiving ATC Mail *receive flight plan data base information from other controllers, supervisor, or system engineer		
A1.6.10.5.6	EVALUATE observed flight data for accuracy based on comparison with information received from other sources		
A1.6.11.1	DETECT UNRELIABLE VSCS COMMUNICATION		
	TASK TYPE: A/VC COORD MEDIA: FREQUENCY: LOW CRITICALITY: HI		
A1.6.11.1.1	PERFORM VSCS, Initiating G/G Communications *intermittent problem initiating G/G communications*		
	O		
A1.6.11.1.2	PERFORM VSCS, Receiving G/G Communications *intermittent problem receiving G/G communications*		
	O		
A1.6.11.1.3	PERFORM VSCS, Communicating Normally Air-To-Ground *intermittent problem receiving or initiating air-to-ground communications*		
	O		
A1.6.11.1.4	PERFORM VSCS, Broadcasting Pre-Recorded Weather Messages *intermittent problem broadcasting*		
	O		
A1.6.11.1.5	PERFORM VSCS, Monitoring ATIS Voice Recording *intermittent problem monitoring ATIS*		
	O		

TASK / ELEMENT NUMBER	TASK STATEMENTS / DATA AND TASK ELEMENT STATEMENTS	OBJECTS	NO. OF OBJECTS
A1.6.11.1	DETECT UNRELIABLE VSCS COMMUNICATION		
	TASK TYPE: A/VC COORD MEDIA: FREQUENCY: LOW CRITICALITY: HI (Continued)		
A1.6.11.1.6	RECOGNIZE malfunction in VSCS system which intermittently degrades or prevents communication capabilities		
A1.6.11.2	QUERY WHETHER OTHERS ARE RECEIVING AN AIRCRAFT'S TRANSMISSIONS		
	TASK TYPE: E/VC COORD MEDIA: V/M FREQUENCY: LOW CRITICALITY: HI		
A1.6.11.2.1	PERFORM VSCS, Initiating G/G Communications *query if other controller is receiving aircraft transmissions*		
A1.6.11.2.2	PERFORM VSCS, Receiving G/G Communications *notice that another controller is/ is not receiving aircraft transmissions*		
	O		
A1.6.11.2.3	PERFORM TEM M.2, Sending ATC Mail *query if other controller is receiving aircraft transmissions*		
A1.6.11.2.4	PERFORM TEM M.1, Receiving ATC Mail *notice that another controller is/ is not receiving aircraft transmissions*		
	A/O		
A1.6.11.2.5	PERFORM VSCS, Communicating Normally Air-To-Ground *query if other pilot is receiving aircraft transmissions*		
A1.6.11.3	ISSUE ALTERNATE COMMUNICATION FOR AIR/GROUND TRANSMISSION		
	TASK TYPE: VC COORD MEDIA: V FREQUENCY: LOW CRITICALITY: HI		
A1.6.11.3.1	PERFORM VSCS, Communicating Normally Air-To-Ground *issue alternate communication channel*		
A1.6.11.4	RECEIVE NOTICE OF TRANSIENT COMMUNICATION FAILURE		
	TASK TYPE: R/VC COORD MEDIA: V/M FREQUENCY: LOW CRITICALITY: MED		
A1.6.11.4.1	PERFORM VSCS, Receiving G/G Communications *notice of transient communication failure*		
	O		
A1.6.11.4.2	PERFORM TEM M.1, Receiving ATC Mail *notice of transient communication failure*		
A1.6.12.1	RECEIVE NOTICE TO TAKE OVER AIRSPACE		
	TASK TYPE: R/VC COORD MEDIA: V/M FREQUENCY: LOW CRITICALITY: HI		
A1.6.12.1.1	PERFORM VSCS, Receiving G/G Communications *notice to take over airspace*		
	O		
A1.6.12.1.2	PERFORM TEM M.1, Receiving ATC Mail *notice to take over airspace*		
A1.6.12.2	RECEIVE NOTICE TO PREPARE FOR SECTOR RECONFIGURATION		
	TASK TYPE: R/VC COORD MEDIA: V/M FREQUENCY: LOW CRITICALITY: HI		
A1.6.12.2.1	PERFORM VSCS, Receiving G/G Communications *notice of terminal reconfiguration*		
	O		

TASK NUMBER / ELEMENT NUMBER	TASK STATEMENTS / DATA AND TASK ELEMENT STATEMENTS	OBJECTS	NO. OF OBJECTS
A1.6.12.2	RECEIVE NOTICE TO PREPARE FOR SECTOR RECONFIGURATION		
	TASK TYPE: R/VC COORD MEDIA: V/M FREQUENCY: LOW CRITICALITY: HI (Continued)		
A1.6.12.2.2	PERFORM TEM M.1, Receiving ATC Mail *notice of terminal reconfiguration*		
	O		
A1.6.12.2.3	RECOGNIZE _Resectorization_Prompt on _Flight_Data_Display	Resectorization_Prompt Flight_Data_Display	1 1
	A/O		
A1.6.12.2.4	RECOGNIZE _Resectorization_Support_FDE_ Indication *emphasis*	Resectorization_Support_FDE_Indication	15
A1.6.12.3	RECEIVE NOTICE TO RELEASE AIRSPACE		
	TASK TYPE: R/VC COORD MEDIA: V/M FREQUENCY: LOW CRITICALITY: HI		
A1.6.12.3.1	PERFORM VSCS, Receiving G/G Communications *notice to release airspace*		
	O		
A1.6.12.3.2	PERFORM TEM M.1, Receiving ATC Mail *notice to release airspace*		
A1.6.12.4	RECEIVE NOTICE THAT ADJACENT FACILITY IS OPERATIVE		
	TASK TYPE: R/VC COORD MEDIA: V/M FREQUENCY: LOW CRITICALITY: HI		
A1.6.12.4.1	PERFORM VSCS, Receiving G/G Communications *notice that adjacent facility is operative*		
	O		
A1.6.12.4.2	PERFORM TEM M.1, Receiving ATC Mail *notice that adjacent facility is operative*		
A1.6.12.5	RECEIVE NOTICE THAT ADJACENT FACILITY IS INOPERATIVE		
	TASK TYPE: R/VC COORD MEDIA: V/M FREQUENCY: LOW CRITICALITY: HI		
A1.6.12.5.1	PERFORM VSCS, Receiving G/G Communications *notice that adjacent facility is inoperative*		
	O		
A1.6.12.5.2	PERFORM TEM M.1, Receiving ATC Mail *notice that adjacent facility is inoperative*		
A1.6.12.6	ENTER RECONFIGURATION/ RESECTORIZATION ACCEPTANCE		
	TASK TYPE: E COORD MEDIA: FREQUENCY: LOW CRITICALITY: MED		
A1.6.12.6.1	INITIATE _Accept_Resectorization message	Accept_Resectorization	1
A1.6.12.6.2	EXECUTE _Accept_Resectorization message	Accept_Resectorization	1
A1.6.12.6.3	DETECT system acceptance of _Accept_Resectorization message	Accept_Resectorization	1
A1.6.13.1	RECEIVE NOTICE OF RADAR SENSOR STATUS		
	TASK TYPE: R/VC COORD MEDIA: V/M FREQUENCY: LOW CRITICALITY: HI		
A1.6.13.1.1	PERFORM VSCS, Receiving G/G communications *radar sensor status*		
	O		

TASK NUMBER / ELEMENT NUMBER	TASK STATEMENTS / DATA AND TASK ELEMENT STATEMENTS	OBJECTS	NO. OF OBJECTS
A1.6.13.1	RECEIVE NOTICE OF RADAR SENSOR STATUS		
	TASK TYPE: R/VC COORD MEDIA: V/M FREQUENCY: LOW CRITICALITY: HI (Continued)		
A1.6.13.1.2	PERFORM TEM M.1, Receving ATC Mail *radar sensor status*		
A1.6.13.2	RECEIVE PROCEDURES TO BE USED TO ACCOMMODATE SENSOR OUTAGE		
	TASK TYPE: R/VC COORD MEDIA: V/M FREQUENCY: LOW CRITICALITY: MED		
A1.6.13.2.1	PERFORM VSCS, Receiving G/G Communications *procedures to be used during sensor outage*		
	O		
A1.6.13.2.2	PERFORM TEM M.1, Receiving ATC Mail *procedures to be used during sensor outage*		
A1.6.13.3	PERCEIVE TRACKING OR TRANSPONDER FAILURE		
	TASK TYPE: R/A COORD MEDIA: FREQUENCY: LOW CRITICALITY: HI		
A1.6.13.3.1	RECOGNIZE Track Swap, Track Disassociation from relationship of _Position_Symbol to _Full_Data_Block on _Situation Display	Position_Symbol Full_Data_Block Situation	27 15 1
	O		
A1.6.13.3.2	RECOGNIZE disappearance of target from Situation Display		
	O		
A1.6.13.3.3	DETECT appearance of _Coast_Indicator in _Track_Position_Symbol, _Leader_Line, _Full_Data_Block or _Partial_Data_Block on Situation Display	Coast_Indicator Track_Position_Symbol Leader_Line Full_Data_Block Partial_Data_Block	1 2 2 2 2
	O		
A1.6.13.3.4	DETECT _Transponder_Failure_Notice in _Full_Data_Block on _Situation_Display	Transponder_Failure_Notice Full_Data_Block Situation_Display	1 1 1
A1.6.13.4	FORWARD NOTICE OF RADAR SENSOR STATUS TO ANOTHER CONTROLLER/ SUPERVISOR		
	TASK TYPE: E/VC COORD MEDIA: V/M FREQUENCY: LOW CRITICALITY: MED		
A1.6.13.4.1	PERFORM VSCS, Initiating G/G Communications *notice of radar sensor status*		
	O		
A1.6.13.4.2	PERFORM TEM M.2, Sending ATC Mail *notice of radar sensor status*		

This Page Intentionally Left Blank
(Pages E-90 thru E-144)

APPENDIX F

TRACEABILITY TABLES

Traceability of TAAS controller tasks to functional requirements of the System Level Specification [21] shows that functionality exists to support the task. Voice communication tasks and purely mental/analytical tasks will not trace to any SLS requirement; only tasks involving receipt or entry of Sector Suite information can be traced.

The task to SLS requirement traceability table in this appendix contains five columns of information:

Task Number

Task Statement

AAS SLS Paragraph Number

AAS SLS Requirement extracting the pertinent SLS text

Page Number of the requirement location in the SLS [21].

Following the presentation of all tasks, there is a list of "orphan" tasks. These are the tasks not containing any reference to an SLS paragraph. All of these orphan tasks should be of an Analytical or Verbal Communication task type (per Appendix D Task Information Requirements), or a receipt task involving direct observation of an event or situation.

NOTE: Due to the extensive revision of the data in this Appendix, black lines (side bars) in the margins to indicate substantive changes (see Foreword) from the original volume have not been used.

Task to Requirement Traceability Matrix

Task Number	Task Statement	Paragraph Number	Requirement	Page No.
A1.1.1.1	REVIEW FLIGHT DATA DISPLAY FOR PRESENT AND/OR FUTURE AIRCRAFT SEPARATION	40.3.7.1.2.1.1.2-00	FLIGHT DATA DISPLAY	779
A1.1.1.2	REVIEW SITUATION DISPLAY FOR POTENTIAL VIOLATION OF AIRCRAFT SEPARATION STANDARDS	40.3.7.1.2.1.1.1-00	SITUATION DISPLAY	779
A1.1.1.4	PROJECT MENTALLY AN AIRCRAFT'S FUTURE POSITION/ ALTITUDE/ PATH	40.3.7.1.2.1.1.1-00	SITUATION DISPLAY	779
		40.3.7.1.2.1.1.2-00	FLIGHT DATA DISPLAY	779
A1.1.1.6	FORCE/ QUICK LOOK FULL DATA BLOCK(S) TO EXAMINE TRACK INFORMATION ON AIRCRAFT	3.7.1.2.1.1.1-00	SITUATION DISPLAY	323
		3.7.1.2.1.1.1.3-00	TARGET AND TRACK DATA AND SYMBOLOGY	330
		3.7.1.2.1.1.1.3-78	The capability shall be provided to force the display of Full Data Blocks at a sector under specified conditions, overriding all display control functions.	335
		3.7.1.2.1.1.1.3-81	An 'adapted' FDB format shall be displayed as a result of handoff or pointout which has been initiated, or from a quick look action.	335
		3.7.1.2.1.2.1-00	TRACK CONTROL	368
		3.7.1.2.1.2.1-13	e. Force Data Block: Flight Identification.	369
		3.7.1.2.1.2.1-14	e. Force Data Block: This message shall be used to cause or remove the forcing of the display of a Full Data Block for an individual aircraft on a Situation Display.	369
		3.7.1.2.1.2.1-37	k. Quick Look: (Sector Numbers).	370
		3.7.1.2.1.2.1-38	k. Quick Look: This message shall provide the means for the controller to display FDBs for aircraft in the position's geographic area of concern that are eligible for display as FDBs at another position or positions in the ACCC, in adjacent sectors in adjacent ACCCs, or in a TCCC being supported.	371
		40.3.7.1.2.1.1.1-00	SITUATION DISPLAY	779
		40.3.7.1.2.1.1.1-01	The requirements of Section 3.7.1.2.1.1.1 and subordinate sections shall apply to TAAS except that Graphic Weather from RWP, Conflict Resolution and MSAW Advisories, Route Display, and Flight Plan Conflict/Trial Plan Display are not required.	779
		40.3.7.1.2.1.2-00	CONTROLLER INPUT LANGUAGE PROCESSING	783

Task Number	Task Statement	Paragraph Number	Requirement	Page No.
A1.1.1.6 (cont'd)	FORCE/ QUICK LOOK FULL DATA BLOCK(S) TO EXAMINE TRACK INFORMATION ON AIRCRAFT	40.3.7.1.2.1.2-02	b. For track control messages all messages except Inhibit/Restore Automatic Pointout, Group Suppression, Vertical Velocity Readout, Flight Plan Extrapolation, Fix/Time Readout, Range/Bearing Readout, Range/Bearing/Fix Readout, Continuous Range Readout, and Radar Contact shall be processed.	783
		40.3.7.1.2.1.2-05	b. The Quick Look message shall only apply to positions in the TAAS or to positions in a TCCC being supported by the TAAS.	784
A1.1.1.8	SELECT FDE SORTING PRIORITY SCHEME	40.3.7.1.2.1.1.2-00	FLIGHT DATA DISPLAY	779
		40.3.7.1.2.1.1.2-04	The controller shall be able to select and prioritize sort factors, on a per list basis.	779
		40.3.7.1.2.1.1.2-15	b. Ordering - Flight Data Entries shall be ordered either automatically or manually under controller command.	780
		40.3.7.1.2.1.1.2-16	b. Ordering - Each list of FDEs shall be controlled separately.	780
		40.3.7.1.2.1.1.2-17	b. Ordering - In automatic ordering, the FDEs shall be sorted according to specified fields of the Flight Data.	780
		40.3.7.1.2.1.1.2-18	b. Ordering - The controller shall have the capability to prioritize the sort factors and to choose an ascending or descending sort order on a per list basis.	780
A1.1.1.9	OBSERVE TRACK VELOCITY/ DISTANCE VECTOR TO PROJECT AIRCRAFT MOVEMENT	3.7.1.2.1.1.1-00	SITUATION DISPLAY	323
		3.7.1.2.1.1.1.4-00	TRACK VECTOR	335
		3.7.1.2.1.1.1.4-01	The Situation Display shall contain a velocity/distance vector associated with each track.	336
		3.7.1.2.1.1.1.4-02	The velocity vector shall start at the track position symbol and its length shall correspond to the distance the aircraft will travel in a controller selectable number of minutes from zero up to an adaptable maximum value.	336
		3.7.1.2.1.1.1.4-03	The distance vector shall start at the track position symbol and its length shall correspond to a controller-selectable number of miles along the projected heading.	337
		3.7.1.2.1.1.1.4-05	An indication shall be provided to distinguish between the two types of track vectors.	337
		40.3.7.1.2.1.1.1-00	SITUATION DISPLAY	779

Task to Requirement Traceability Matrix

Task Number	Task Statement	Paragraph Number	Requirement	Page No.
A1.1.1.9 (cont'd)	OBSERVE TRACK VELOCITY/ DISTANCE VECTOR TO PROJECT AIRCRAFT MOVEMENT	40.3.7.1.2.1.1.1-01	The requirements of Section 3.7.1.2.1.1.1 and subordinate sections shall apply to TAAS except that Graphic Werther from RWP, Conflict Resolution and MSAW Advisories, Route Display, and Flight Plan Conflict/Trial Plan Display are not required.	779
A1.1.1.12	REVIEW SITUATION DISPLAY FOR POTENTIAL VIOLATION OF AIRSPACE SEPARATION STANDARDS	40.3.7.1.2.1.1.1-00	SITUATION DISPLAY	779
A1.1.1.14	REVIEW SITUATION DISPLAY FOR POTENTIAL VIOLATION OF CONFORMANCE CRITERIA	40 3.7.1.2.1.1.1-00	SITUATION DISPLAY	779
A1.1.1.75	REVIEW DISPLAYS FOR POTENTIAL VIOLATION OF FLOW RESTRICTIONS	40.3.7.1.2.1.1.1-00	SITUATION DISPLAY	779
		40.3.7.1.2.1.1.2-00	FLIGHT DATA DISPLAY	779
A1.1.1.76	REQUEST BEACON CODE/ MODE C/ GROUND SPEED READOUT OF UNASSOCIATED TARGET	40.3.7.1.2.1.2-00	CONTROLLER INPUT LANGUAGE PROCESSING	783
		40.3.7.1.2.1.2-24	Any messages necessary for ATC at existing ARTS control positions shall also be enterable at the Sector Suite of the TAAS, even if such messages are not required for the AAS.	785
A1.1.2.1	OBSERVE DISPLAY OF NEW/ CHANGED EQUIPMENT/ OPERATIONAL STATUS	3.7.1.2.1.1.8-00	SYSTEM STATUS DATA DISPLAY	359
		3.7.1.2.1.1.8-01	This logical display shall contain dynamic information regarding the status of ATC equipment, operational areas, airports, etc.	359
		3.7.1.2.1.1.8-02	The following data categories shall be included: Communication Channel Assignments, Radio Frequencies, Radio Equipment Outages and Repair Schedule, Radar Equipment Outages and Repair Schedule, NAVAID Outages and Repair Schedule, NAVAID Maintenance Schedule, Sectorization Plan ... (See SLS).	359
		3.7.1.2.1.1.8-03	The controller shall have the capability to select the categories of data to be displayed.	359
		3.7.1.2.1.1.8-04	All displayed information shall be updated automatically when changes are reported.	359
		3.7.1.2.1.1.8-05	As established through adaptation, selected items shall be emphasized to indicate that an automatic update has occurred on the display.	359
		40.3.7.1.1.1.3-00	SYSTEM FUNCTIONAL PERFORMANCE MONITORING CAPABILITY	766

Task Number	Task Statement	Paragraph Number	Requirement	Page No.
A1.1.2.1 (cont'd)	OBSERVE DISPLAY OF NEW/ CHANGED EQUIPMENT/ OPERATIONAL STATUS	40.3.7.1.1.1.3-02	It shall report to the operations and supervisory personnel all events which affect the functional performance of the system and shall provide a comprehensive history of the TAAS's functional availability.	766
		40.3.7.1.1.1.3.3-00	MONITOR FUNCTION PERFORMANCE AND AVAILABILITY	767
		40.3.7.1.1.1.3.3-03	The TAAS shall alert supervisory and operational personnel to any degradation of the system's functional performance.	767
		40.3.7.1.1.1.3.3-04	If the performance of a function degrades to a point where it is no longer useful, performance of that function shall be automatically suspended and supervisory and operational personnel shall be notified.	767
		40.3.7.1.1.1.3.3-07	If the Reduced Capability Mode cannot be maintained, all supervisory and operational personnel shall be notified that the system is in the emergency mode.	767
		40.3.7.1.1.1.3.3-17	When the interface between a TCCC or D-BRITE and the TAAS is lost or when the TAAS determines that a TCCC is in standalone mode, the TAAS shall signal supervisory and affected operational personnel.	768
		40.3.7.1.1.1.3.3-18	When communications are restored, the TAAS shall signal the affected personnel and facilities.	768
		40.3.7.1.2.1.1.7-00	SYSTEM STATUS DATA DISPLAY	783
		40.3.7.1.2.1.1.7-01	The requirements of Section 3.7.1.2.1.1.8 shall apply to TAAS except that the source of data shall be supervisor, area manager, controller manual entry or automatically-detected failures of TAAS resources, and that there is no requirement for additional categories defined as part of ... (See SLS).	783
A1.1.2.2	ENTER SYSTEM STATUS DATA CHANGE	40.3.7.1.2.1.1.7-00	SYSTEM STATUS DATA DISPLAY	783
		40.3.7.1.2.1.1.7-01	The requirements of Section 3.7.1.2.1.1.8 shall apply to TAAS except that the source of data shall be supervisor, area manager, controller manual entry or automatically-detected failures of TAAS resources, and that there is no requirement for additional categories defined as part of ... (See SLS).	783
		40.3.7.1.2.1.2-00	CONTROLLER INPUT LANGUAGE PROCESSING	783
		40.3.7.1.2.1.2-13	a. The requirements of Section 3.7.1.2.1.2.4 shall be replaced as follows.	784

Task to Requirement Traceability Matrix

Task Number	Task Statement	Paragraph Number	Requirement	Page No.
A1.1.2.2 (cont'd)	ENTER SYSTEM STATUS DATA CHANGE	40.3.7.1.2.1.2-14	e. The controller, supervisor or area manager shall be able to change the System Status Data that are listed in Section 40.3.7.1.2.1.1.7 describing the System Status Data Display.	784
A1.1.2.3	RECEIVE NOTICE OF STATUS OF ADJACENT/ BACKUP FACILITY AUTOMATION EQUIPMENT	3.7.1.1.1.3.3-00	MONITOR FUNCTION PERFORMANCE AND AVAILABILITY	263
		3.7.1.1.1.3.3-08	If the Reduced Capability Mode cannot be maintained, all supervisory and operational personnel shall be notified that the system is in the emergency mode and messages shall be sent to adjacent and backup ACCCs and appropriate TCCCs.	263
		3.7.1.1.3.7.1-00	ATC MAIL MESSAGE PROCESSING	299
		3.7.1.1.3.7.1-01	The ACCC shall provide the capability to communicate via electronic media.	299
		40.3.7.1.1.3.7.1-00	ATC MAIL PROCESSING	776
		40.3.7.1.1.3.7.1-01	The requirements of Section 3.7.1.1.3.7.1 shall apply to TAAS.	776
A1.1.2.4	DETECT EQUIPMENT SERVICE INTERRUPTION/ RESTORATION	40.3.7.1.2.1.1.1-00	SITUATION DISPLAY	779
		40.3.7.1.2.1.1.2-00	FLIGHT DATA DISPLAY	779
		40.3.7.1.2.1.1.3-00	ALERT AND RESOLUTION DISPLAY	782
		40.3.7.1.2.1.1.4-00	SPECIAL LISTS	782
		40.3.7.1.2.1.1.5-00	MESSAGE COMPOSITION AND RESPONSE DISPLAY	783
		40.3.7.1.2.1.1.6-00	AIRPORT ENVIRONMENTAL DATA DISPLAY	783
		40.3.7.1.2.1.1.7-00	SYSTEM STATUS DATA DISPLAY	763
A1.1.2.5	RECEIVE NOTICE OF COMMUNICATION STATUS	3.7.1.1.3.7.1-00	ATC MAIL MESSAGE PROCESSING	299
		3.7.1.1.3.7.1-01	The ACCC shall provide the capability to communicate via electronic media.	299
		40.3.7.1.1.3.7.1-00	ATC MAIL PROCESSING	776
		40.3.7.1.1.3.7.1-01	The requirements of Section 3.7.1.1.3.7.1 shall apply to TAAS.	776
A1.1.2.75	DETECT AIRPORT ENVIRONMENTAL EQUIPMENT SERVICE INTERRUPTION/ RESTORATION ALERT	3.7.1.1.3.7.2-00	ENVIRONMENTAL AND STATUS DATA PROCESSING	299

Task to Requirement Traceability Matrix

Task Number	Task Statement	Paragraph Number	Requirement	Page No.
A1.1.2.75 (cont'd)	DETECT AIRPORT ENVIRONMENTAL EQUIPMENT SERVICE INTERRUPTION/ RESTORATION ALERT	3.7.1.1.3.7.2-05	c. Environmental and ATC Equipment Alerts - The ACCC shall provide selected environmental and equipment operational status data to the maintenance and operational control positions in such a manner as to assure timely controller response.	388
		40.3.7.1.1.3.7.2-00	ENVIRONMENTAL AND STATUS DATA PROCESSING	776
		40.3.7.1.1.3.7.2-01	The requirements of Section 3.7.1.1.3.7.2 shall apply to TAAS except that the source of airport environmental data and airport equipment status data shall be TCCC or manual input.	776
A1.1.2.76	ACKNOWLEDGE AIRPORT ENVIRONMENTAL EQUIPMENT SERVICE OPERATIONAL STATUS ALERT	3.7.1.2.1.1.7-00	AIRPORT ENVIRONMENTAL DATA DISPLAY	358
		3.7.1.2.1.1.7-11	As established through adaptation, selected data items (e.g., closed runways, OASI, etc.) shall be emphasized to indicate to the controller that an automatic update has occurred on the display.	359
		3.7.1.2.1.1.7-13	The data shall remain emphasized for either an adapted time period or until the controller deselects the emphasis.	359
		40.3.7.1.2.1.1.6-00	AIRPORT ENVIRONMENTAL DATA DISPLAY	783
		40.3.7.1.2.1.1.6-01	The requirements of Section 3.7.1.2.1.1.7 shall apply to TAAS except that the source of data shall be TCCC or manual entry from supervisor or controller position.	783
A1.1.3.1	SEARCH DISPLAY FOR INACTIVE FLIGHT PLAN OR CLEARANCE REQUEST	40.3.7.1.2.1.1.2-00	FLIGHT DATA DISPLAY	779
		40.3.7.1.2.1.1.2-01	This logical display shall contain flight information for aircraft under the control of the sector, those not yet under the control of the sector, and those of interest to the sector.	779
		40.3.7.1.2.1.1.2-07	a. Posting - There shall be three types of FDEs for the terminal area: enroute, departure, and arrival.	779
		40.3.7.1.2.1.1.2-08	a. Posting - The capability shall be provided to display the different types of FDEs in separate lists.	779
		40.3.7.1.2.1.1.2-12	a. Posting - Other posting lists such as Information, Hold, Release, etc., shall be available as defined in adaptation.	780
A1.1.3.2	REQUEST FLIGHT DATA READOUT	3.7.1.2.1.1.6-00	MESSAGE COMPOSITION AND RESPONSE DISPLAY	358

Task to Requirement Traceability Matrix

Task Number	Task Statement	Paragraph Number	Requirement	Page No.
A1.1.3.2 (cont'd)	REQUEST FLIGHT DATA READOUT	3.7.1.2.1.1.6-04	The Response Display shall contain information that is a response to a query made by the controller to the data base such as a flight plan readout, a route readout, weather data readout, or ATC mail message readout.	358
		40.3.7.1.2.1.1.2-00	FLIGHT DATA DISPLAY	779
		40.3.7.1.2.1.1.2-35	In addition to the Flight Data Area, a Flight Data Readout Area shall be established to display all of the flight data on one particular flight that is selected by the controller.	781
A1.1.3.3	REQUEST FLIGHT DATA ENTRY FORMAT CHANGE	40.3.7.1.2.1.1.2-00	FLIGHT DATA DISPLAY	779
		40.3.7.1.2.1.1.2-03	Multiple adaptation sets shall be provided for controller selection of the format of data to be displayed.	779
		40.3.7.1.2.1.1.2-33	f. Formatting - A minimum of 10 formats set in adaptation shall be provided for each operational position specified in Section 40.3.7.1.2.2 (this is a minimum of 40 formats, 10 for each of 4 positions).	781
		40.3.7.1.2.1.1.2-34	f. Formatting - The controller shall be able to select a format for all FDEs, a different format for all FDEs in each separate posting list, and/or a different format for a particular FDE from the formats available at his position.	781
A1.1.4.1	ENTER DEPARTURE/ EN ROUTE TIME MESSAGE	3.7.1.2.1.2.2-00	FLIGHT DATA CHANGES	373
		3.7.1.2.1.2.2-10	c. Departure: Flight Identification, (Departure Time), (Assigned Altitude).	374
		3.7.1.2.1.2.2-11	c. Departure: This message shall be used to activate a proposed departure or a proposed airfile flight plan.	374
		3.7.1.2.1.2.2-22	g. Progress Report: Flight Identification, Fix, (Actual Time at Fix), (Pilot Estimate at Fix), (Next Fix), (Pilot Estimate at Next Fix), (Altitude).	375
		3.7.1.2.1.2.2-23	g. Progress Report: This message shall be used to update the position in time of an active flight plan.	375
		40.3.7.1.2.1.2-00	CONTROLLER INPUT LANGUAGE PROCESSING	783
		40.3.7.1.2.1.2-07	c. For Flight Data Changes (Section 3.7.1.2.1.2.2) all messages shall be processed by TAAS except Emergency Airport, Implement Reroute, Implement Absorption Maneuver, Create/Delete Route, and Repetitive Route Amendment.	784

Task to Requirement Traceability Matrix

Task Number	Task Statement	Paragraph Number	Requirement	Page No.
A1.1.4.2	INITIATE TRACK MANUALLY	3.7.1.1.3.2.2-00	TRACK INITIATION	274
		3.7.1.1.3.2.2-05	The ACCC shall provide the capability of manually initiating a track through controller input even if the reports associated with the target to be tracked consist entirely of primary (search) reports.	274
		3.7.1.2.1.2.1-00	TRACK CONTROL	368
		3.7.1.2.1.2.1-05	b. Track: Flight Identification, Track Action (Coast, Start, Drop, etc.), (Track Start Position), (Speed), (Heading), (Assigned Altitude).	368
		3.7.1.2.1.2.1-06	b. Track: This message shall be used to change the tracking status of an aircraft.	368
		3.7.1.2.1.2.1-07	b. Track: The Track message shall be designed to enable the controller to modify the tracking function for a particular aircraft.	368
		40.3.7.1.1.3.2-00	AUTOMATIC TRACKING CAPABILITY	769
		40.3.7.1.1.3.2-01	The requirements of Section 3.7.1.1.3.2 and subordinate sections shall apply to the TAAS with the following exceptions.	769
		40.3.7.1.2.1.2-00	CONTROLLER INPUT LANGUAGE PROCESSING	783
		40.3.7.1.2.1.2-02	b. For track control messages all messages except Inhibit/Restore Automatic Pointout, Group Suppression, Vertical Velocity Readout, Flight Plan Extrapolation, Fix/Time Readout, Range/Bearing Readout, Range/Bearing/Fix Readout, Continuous Range Readout, and Radar Contact shall be processed.	783
A1.1.4.3	OBSERVE AUTOMATIC TRACK START	3.7.1.1.3.2-00	AUTOMATIC TRACKING CAPABILITY	273
		3.7.1.1.3.2-02	All tracks that are initiated shall be designated as unclassified tracks until processed by the Pairing Tracks with Flight Plans function.	273
		3.7.1.1.3.2-03	Tracks that pair with a flight plan shall be designated as paired tracks.	273
		3.7.1.1.3.2-04	Tracks that do not pair with a flight plan shall be designated as unpaired tracks.	273
		3.7.1.1.3.2-05	The ACCC shall attempt to correlate target data with all tracks.	273
		3.7.1.1.3.2.2-00	TRACK INITIATION	274

Task to Requirement Traceability Matrix

Task Number	Task Statement	Paragraph Number	Requirement	Page No.
A1.1.4.3 (cont'd)	OBSERVE AUTOMATIC TRACK START	3.7.1.1.3.2.2-01	a. Except when selected categories of tracks are inhibited per paragraph 3.7.1.1.3.2.12, the ACCC shall automatically initiate tracks on all Mode S and ATCRBS targets.	274
		3.7.1.1.3.2.2-02	b. Except in adapted volumes of airspace around airports, the ACCC shall automatically initiate tracks on all Mode S and ATCRBS targets.	274
		3.7.1.1.3.2.2-03	c. Except for targets with valid Mode C data when the Mode C is above or below adapted altitudes for the ACF (the ACF ceiling plus at least 6000 feet and the ACF floor minus at least 6000 feet), the ACCC shall automatically initiate tracks on all Mode S and ATCRBS targets.	274
		3.7.1.1.3.2.2-06	A controlled track shall also be initiated as a result of a handoff from an adjacent facility.	274
		3.7.1.1.3.2.3-00	PAIRING TRACKS WITH FLIGHT PLAN	275
		3.7.1.1.3.2.3-01	The ACCC shall pair unclassified tracks with flight plan data.	275
		3.7.1.1.3.2.3-02	When a discrete code or Mode S track is automatically initiated, a check shall be made to determine whether a flight plan exists for that track.	275
		3.7.1.1.3.2.3-05	For departures from airports being provided radar approach control services via the ACCC, the ACCC shall automatically initiate departure processing for the flight when the track auto-initiates and pairs with the flight plan for the flight.	275
		40.3.7.1.1.3.2-00	AUTOMATIC TRACKING CAPABILITY	769
		40.3.7.1.1.3.2-01	The requirements of Section 3.7.1.1.3.2 and subordinate sections shall apply to the TAAS with the following exceptions.	769
A1.1.4.4	RECEIVE DEPARTURE/ EN ROUTE TIME NOTICE	3.7.1.1.3.7.1-00	ATC MAIL MESSAGE PROCESSING	299
		3.7.1.1.3.7.1-01	The ACCC shall provide the capability to communicate via electronic media.	299
		40.3.7.1.1.3.7.1-00	ATC MAIL PROCESSING	776
		40.3.7.1.1.3.7.1-01	The requirements of Section 3.7.1.1.3.7.1 shall apply to TAAS.	776
A1.1.4.75	ACKNOWLEDGE EMPHASIZED DEPARTURE MESSAGE	40.3.1.1-00	GENERAL DESCRIPTION	727

Task to Requirement Traceability Matrix

Task Number	Task Statement	Paragraph Number	Requirement	Page No.
A1.1.4.7E (cont'd)	ACKNOWLEDGE EMPHASIZED DEPARTURE MESSAGE	40.3.1.1-01	Excluding any TAAS equipment located at airport towers to support tower displays, the TAAS shall be capable of being installed alongside of and in the same building as an ISSS.	727
		40.3.2.1.1-00	TAAS PERFORMANCE	730
		40.3.2.1.1-01	There is no intent to require that the identical terminology, constructs, data items, or message types must be designed into the TAAS.	730
A1.1 4.7E	OBSERVE EMPHASIZED DEPARTURE MESSAGE	40.3.7.1.2.1.2-00	CONTROLLER INPUT LANGUAGE PROCESSING	783
		40.3.7.1.2.1.2-24	Any messages necessary for ATC at existing ARTS control positions shall also be enterable at the Sector Suite of the TAAS, even if such messages are not required for the AAS.	785
A1.1.5.1	EVALUATE CONDITIONS FOR PROVIDING FLIGHT FOLLOWING	40.3.7.1.2.1.1.1-00	SITUATION DISPLAY	779
		40.3.7.1.2.1.1.2-00	FLIGHT DATA DISPLAY	779
A1.1.5.2	RECEIVE REQUEST FOR FLIGHT FOLLOWING	3.7.1.1.3.7.1-00	ATC MAIL MESSAGE PROCESSING	299
		3.7.1.1.3.7.1-01	The ACCC shall provide the capability to communicate via electronic media.	299
		40.3.7.1.1.3.7.1-00	ATC MAIL PROCESSING	776
		40.3.7.1 1.3.7.1-01	The requirements of Section 3.7.1.1.3.7.1 shall apply to TAAS.	776
A1.1.5.3	DENY FLIGHT FOLLOWING REQUEST	3.7.1.1.3.7.1-00	ATC MAIL MESSAGE PROCESSING	299
		3.7.1.1.3.7.1-01	The ACCC shall provide the capability to communicate via electronic media.	299
		40.3.7.1.1.3.7.1-00	ATC MAIL PROCESSING	776
		40.3.7.1.1.3.7.1-01	The requirements of Section 3.7.1.1.3.7.1 shall apply to TAAS.	776
A1.1.5.4	REQUEST/ ASSIGN BEACON CODE TO AIRCRAFT	3.7.1.2.1.2.2-00	FLIGHT DATA CHANGES	373
		3.7.1.2.1 2.2-12	d. Discrete Code Request/Assignment: Flight Identification, (Beacon Code), (Code Subset Designator).	374
		3.7.1.2.1.2.2-13	d. Discrete Code Request/Assignment: This message shall be used to request the ACCC to assign or change a discrete beacon code for a flight.	374

Task Number	Task Statement	Paragraph Number	Requirement	Page No.
A1.1.5.4 (cont'd)	REQUEST/ ASSIGN BEACON CODE TO AIRCRAFT	3.7.1.2.1.2.2-14	d. Discrete Code Request/Assignment: The controller shall be able to assign a specific code, or have the system pick the code from a controller selected code subset or from a contiguous set of codes in a subset.	374
		40.3.7.1.1.3.3.1.5-00	BEACON CODE ASSIGNMENT	773
		40.3.7.1.1.3.3.1.5-10	The controller shall be able to request a discrete code be assigned to a flight plan from one specific adapted subset or from an adapted contiguous set of codes in a subset.	773
		40.3.7.1.2.1.2-00	CONTROLLER INPUT LANGUAGE PROCESSING	783
		40.3.7.1.2.1.2-07	c. For Flight Data Changes (Section 3.7.1.2.1.2.2) all messages shall be processed by TAAS except Emergency Airport, Implement Reroute, Implement Absorption Maneuver, Create/Delete Route, and Repetitive Route Amendment.	784
A1.1.6.1	OFFSET A DATA BLOCK	3.7.1.2.1.1.1-00	SITUATION DISPLAY	323
		3.7.1.2.1.1.1.3-00	TARGET AND TRACK DATA AND SYMBOLOGY	330
		3.7.1.2.1.1.1.3-83	A leader shall be displayed from the track position symbol to the Callsign in the displayed Full Data Block.	335
		3.7.1.2.1.1.1.3-84	The direction and length of the leader for each data block shall be determined by one of two controller-selectable ways, automatic or manual data block offset.	335
		3.7.1.2.1.1.1.3-87	The controller shall be able to override automatic offsetting for the whole display or for each data block individually.	335
		3.7.1.2.1.1.1.3-88	The controller shall then be able to adjust the leader length and the leader direction of each Data Block manually.	335
		3.7.1.2.1.1.1.3-89	Leader length and direction shall be separately adjustable for LDBs, FDBs, and PDBs.	335
		3.7.1.2.1.1.1.3-94	The leader shall be displayed from the track position symbol to the top line in the PDB.	336
		3.7.1.2.1.1.1.3-95	The length and direction of the leader shall be initially set in adaptation and be controller adjustable.	336
		3.7.1.2.1.1.1.3.0-01	The leader shall be displayed from the target symbol to the top line in the LDB.	336
		3.7.1.2.1 1.1.3.0-02	The length and direction of the leader shall be initially set in adaptation and be controller adjustable.	336

Task Number	Task Statement	Paragraph Number	Requirement	Page No.
A1.1.6.1 (cont'd)	OFFSET A DATA BLOCK	40.3.7.1.2.1.1.1-00	SITUATION DISPLAY	779
		40.3.7.1.2.1.1.1-01	The requirements of Section 3.7.1.2.1.1.1 and subordinate sections shall apply to TAAS except that Graphic Weather from RWP, Conflict Resolution and MSAW Advisories, Route Display, and Flight Plan Conflict/Trial Plan Display are not required.	779
A1.1.6.2	UPDATE/ REVISE CONTROLLER NOTE	3.7.1.2.1.1.1-00	SITUATION DISPLAY	323
		3.7.1.2.1.1.14-00	GEOGRAPHIC TAGGING	339
		3.7.1.2.1.1.14-02	The capability shall be provided for the controller to enter a string of alphanumerics starting at any geographic point designated by the CRSD or controller entered fix.	338
		3.7.1.2.1.1.18-00	CONTROLLER NOTEPAD DISPLAY	363
		3.7.1.2.1.1.18-01	The logical display shall contain controller-entered free-form text notes which have no 'semantic level' meaning to the system, but rather are treated as a string of undifferentiated characters.	363
		3.7.1.2.1.1.18-02	The capability shall be provided to quickly and easily edit or modify the contents of these notes.	363
		40.3.7.1.2.1.1.1-00	SITUATION DISPLAY	779
		40.3.7.1.2.1.1.1-01	The requirements of Section 3.7.1.2.1.1.1 and subordinate sections shall apply to TAAS except that Graphic Weather from RWP, Conflict Resolution and MSAW Advisories, Route Display, and Flight Plan Conflict/Trial Plan Display are not required.	779
		40.3.7.1.2.1.1.11-00	CONTROLLER NOTEPAD DISPLAY	783
		40.3.7.1.2.1.1.11-01	The requirements of Section 3.7.1.2.1.1.18 shall apply to TAAS.	783
A1.1.6.3	DELETE FLIGHT DATA ENTRY AND FULL DATA BLOCK FROM ATC SYSTEM	3.7.1.2.1.2.2-00	FLIGHT DATA CHANGES	373
		3.7.1.2.1.2.2-30	j. Drop Flight Plan: Flight Identification.	376
		3.7.1.2.1.2.2-31	j. Drop Flight Plan: This message shall be used to delete from the system all flight data for an IFR or VFR flight plan and downgrade the paired track, if any, to an unpaired track.	376
		40.3.7.1.2.1.2-00	CONTROLLER INPUT LANGUAGE PROCESSING	783

Task Number	Task Statement	Paragraph Number	Requirement	Page No.
A1.1.6.3 (cont'd)	DELETE FLIGHT DATA ENTRY AND FULL DATA BLOCK FROM ATC SYSTEM	40.3.7.1.2.1.2-07	c. For Flight Data Changes (Section 3.7.1.2.1.2.2) all messages shall be processed by TAAS except Emergency Airport, Implement Reroute, Implement Absorption Maneuver, Create/Delete Route, and Repetitive Route Amendment.	784
A1.1.6.5	SUPPRESS DISPLAY OF FLIGHT DATA ENTRY AND FULL DATA BLOCK FROM ALL DISPLAYS IN OWN SECTOR SUITE	3.7.1.2.1.2.2-00	FLIGHT DATA CHANGES	373
		3.7.1.2.1.2.2-58	w. Suppress/Restore Full Data Block and Flight Data Entry: Flight Identification.	378
		3.7.1.2.1.2.2-59	w. Suppress/Restore Full Data Block and Flight Data Entry: This message shall be used to suppress/restore the display of a Full Data Block and associated Flight Data Entry from all displays in this Sector Suite.	378
		40.3.7.1.2.1.2-00	CONTROLLER INPUT LANGUAGE PROCESSING	783
		40.3.7.1.2.1.2-07	c. For Flight Data Changes (Section 3.7.1.2.1.2.2) all messages shall be processed by TAAS except Emergency Airport, Implement Reroute, Implement Absorption Maneuver, Create/Delete Route, and Repetitive Route Amendment.	784
A1.1.6.6	RESTORE DISPLAY OF FLIGHT DATA ENTRY AND FULL DATA BLOCK TO ALL DISPLAYS ON OWN SECTOR SUITE	3.7.1.2.1.2.2-00	FLIGHT DATA CHANGES	373
		3.7.1.2.1.2.2-58	w. Suppress/Restore Full Data Block and Flight Data Entry: Flight Identification.	378
		3.7.1.2.1.2.2-59	w. Suppress/Restore Full Data Block and Flight Data Entry: This message shall be used to suppress/restore the display of a Full Data Block and associated Flight Data Entry from all displays in this Sector Suite.	378
		40.3.7.1.2.1.2-00	CONTROLLER INPUT LANGUAGE PROCESSING	783
		40.3.7.1.2.1.2-07	c. For Flight Data Changes (Section 3.7.1.2.1.2.2) all messages shall be processed by TAAS except Emergency Airport, Implement Reroute, Implement Absorption Maneuver, Create/Delete Route, and Repetitive Route Amendment.	784
A1.1.6.7	SUPPRESS DATA BLOCK FROM ALL DISPLAYS IN OWN SECTOR SUITE	3.7.1.2.1.1.1-00	SITUATION DISPLAY	323
		3.7.1.2.1.1.1.3-00	TARGET AND TRACK DATA AND SYMBOLOGY	330
		3.7.1.2.1.1.1.3-79	The controller shall have the capability to suppress the display of individual FDBs and restore the display of a suppressed FDB.	335

Task Number	Task Statement	Paragraph Number	Requirement	Page No.
A1.1.6.7 (cont'd)	SUPPRESS DATA BLOCK FROM ALL DISPLAYS IN OWN SECTOR SUITE	3.7.1.2.1.1.1.3.0-03	The controller shall have the capability to suppress the display of individual LDBs and restore the display of a suppressed LDB.	336
		40.3.7.1.2.1.1.1-00	SITUATION DISPLAY	779
		40.3.7.1.2.1.1.1-01	The requirements of Section 3.7.1.2.1.1.1 and subordinate sections shall apply to TAAS except that Graphic Weather from RWP, Conflict Resolution and MSAW Advisories, Route Display, and Flight Plan Conflict/Trial Plan Display are not required.	779
A1.1.6.8	RESTORE DATA BLOCK TO ALL DISPLAYS IN OWN SECTOR SUITE	3.7.1.2.1.1.1-00	SITUATION DISPLAY	323
		3.7.1.2.1.1.1.3-00	TARGET AND TRACK DATA AND SYMBOLOGY	330
		3.7.1.2.1.1.1.3-74	dd. Some of the conditions that shall result in display of a FDB for a track are: Full Data Block has been requested for this track by controller input.	335
		3.7.1.2.1.1.1.3-79	The controller shall have the capability to suppress the display of individual FDBs and restore the display of a suppressed FDB.	335
		3.7.1.2.1.1.1.3.0-03	The controller shall have the capability to suppress the display of individual LDBs and restore the display of a suppressed LDB.	336
		3.7.1.2.1.1.1.3.0-08	ea. The controller shall have the capability to display LDBs according to the following controller selected LDB filters: altitude limits.	336
		3.7.1.2.1.1.1.3.0-09	eb. The controller shall have the capability to display LDBs according to the following controller selected LDB filters: beacon code limits.	336
		3.7.1.2.1.1.1.3.0-10	ec. The controller shall have the capability to display LDBs according to the following controller selected LDB filters: geographic area within the selected geographic area of concern.	336
		40.3.7.1.2.1.1.1-00	SITUATION DISPLAY	779
		40.3.7.1.2.1.1.1-01	The requirements of Section 3.7.1.2.1.1.1 and subordinate sections shall apply to TAAS except that Graphic Weather from RWP, Conflict Resolution and MSAW Advisories, Route Display, and Flight Plan Conflict/Trial Plan Display are not required.	779
A1.1.6.9	SUPPRESS FLIGHT DATA ENTRY FROM ALL DISPLAYS IN OWN SECTOR SUITE	40.3.7.1.2.1.1.2-00	FLIGHT DATA DISPLAY	779

Task Number	Task Statement	Paragraph Number	Requirement	Page No.
A1.1.6.9 (cont'd)	SUPPRESS FLIGHT DATA ENTRY FROM ALL DISPLAYS IN OWN SECTOR SUITE	40.3.7.1.2.1.1.2-29	d. Suppression - FDEs shall be automatically suppressed from one or more lists as a result of the selection by the controller of a suppress FDE action or expiration of an adaptable time after accept handoff is received from an adjacent sector or facility.	780
		40.3.7.1.2.1.1.2-30	d. Suppression - An optional manual acknowledgment mode shall be provided to override automatic suppressions.	780
A1.1.6.10	RESTORE FLIGHT DATA ENTRY TO ALL DISPLAYS IN OWN SECTOR SUITE	3.7.1.2.1.2.2-00	FLIGHT DATA CHANGES	373
		3.7.1.2.1.2.2-42	p. Request FDEs: (Sector Number and/or Facility), (Posting List Header), (Flight Identification(s)).	376
		3.7.1.2.1.2.2-43	p. Request FDEs: This message shall enable the controller to request one or more FDEs from another sector and/or facility to be displayed in the Flight Data Area at the requesting sector.	377
		40.3.7.1.2.1.1.2-00	FLIGHT DATA DISPLAY	779
		40.3.7.1.2.1.1.2-13	c. Posting - The controller shall have the capability to move FDEs into and out of these special lists and the other types of posting lists including those of other sectors.	780
		40.3.7.1.2.1.2-00	CONTROLLER INPUT LANGUAGE PROCESSING	783
		40.3.7.1.2.1.2-07	c. For Flight Data Changes (Section 3.7.1.2.1.2.2) all messages shall be processed by TAAS except Emergency Airport, Implement Reroute, Implement Absorption Maneuver, Create/Delete Route, and Repetitive Route Amendment.	784
A1.1.6.11	ENTER FDE NOTATIONS	3.7.1.2.1.1.2.1-00	FLIGHT DATA FIELDS	341
		3.7.1.2.1.1.2.1-09	The capability shall be provided to display/delete FDE notations (FDENs) in specified fields of FDEs.	342
		3.7.1.2.1.1.2.1-13	In addition, the capability shall be provided for the controller to display any FDEN through controller FDEN entry.	342
		3.7.1.2.1.1.2.1-28	d. FDENs indicating that radar contact has been lost or radar service has been terminated shall be displayed upon controller FDEN entry.	342
		3.7.1.2.1.1.2.1-32	f. The following FDEN categories shall be provided: FDENs associated with the route data field shall uniquely denote radar vector heading and/or direct route clearances, DME arc, and radius clearances.	343

Task to Requirement Traceability Matrix

Task Number	Task Statement	Paragraph Number	Requirement	Page No.
A1.1.6.11 (cont'd)	ENTER FDE NOTATIONS	3.7.1.2.1.1.2.1-33	f. These FDENs shall be displayed upon controller FDEN entry.	343
		3.7.1.2.1.1.2.1-52	i. An FDEN indicating a controller request for a pilot to report reaching or leaving an altitude and an FDEN indicating pilot reported altitude other than assigned shall be displayed upon controller FDEN entry.	344
		3.7.1.2.1.1.2.1-53	i. An FDEN indicating that an altitude has been reached or vacated shall be generated when the controller inputs a reported altitude message indicating this condition.	344
		3.7.1.2.1.1.2.1-54	j. The following FDEN categories shall be provided: FDENs shall indicate a record(s) of clearances and instructions which have been delivered.	344
		3.7.1.2.1.1.2.1-57	j. These FDENs shall be displayed upon controller FDEN entry.	344
		3.7.1.2.1.1.2.1-58	k. The following FDEN categories shall be provided: An FDEN shall denote a controller assigned speed restriction.	344
		3.7.1.2.1.1.2.1-59	k. This FDEN shall be generated upon controller FDEN entry and shall be automatically transferred and displayed at the next sector when a handoff is initiated.	344
		3.7.1.2.1.1.2.1-63	m. This FDEN shall be generated when a hold message is entered by the controller.	344
		3.7.1.2.1.1.2.1-65	n. The following FDEN categories shall be provided: An FDEN shall indicate to the controller that future action is required with respect to the field tagged with this FDEN.	344
		3.7.1.2.1.1.2.1-66	n. This FDEN shall be displayed upon controller FDEN entry.	344
		3.7.1.2.1.1.2.1-67	o. The following FDEN categories shall be provided: An FDEN shall denote that a flight has been changed to the next frequency and shall include, at the controller's option, the new frequency and the frequency time change.	344
		3.7.1.2.1.1.2.1-68	o. This FDEN shall be displayed upon controller FDEN entry.	344
		3.7.1.2.1.1.2.1-69	p. The following FDEN categories shall be provided: FDENs shall uniquely indicate that VFR flight following, Stage II, TCA, TRSA, or APSA service is being provided to an aircraft.	344
		3.7.1.2.1.1.2.1-70	p. These FDENs shall be displayed upon controller FDEN entry.	344

Task Number	Task Statement	Paragraph Number	Requirement	Page No.
A1.1.6.11 (cont'd)	ENTER FDE NOTATIONS	3.7.1.2.1.1.2.1-71	q. The following FDEN categories shall be provided: An FDEN shall denote the cancellation of an IFR flight plan.	344
		3.7.1.2.1.1.2.1-72	q. This FDEN shall be displayed upon controller FDEN entry.	344
		3.7.1.2.1.1.2.1-73	r. The following FDEN categories shall be provided: An FDEN shall uniquely denote arrival time and clearance void time.	344
		3.7.1.2.1.1.2.1-74	r. These FDENs shall be displayed upon controller FDEN entry.	344
		3.7.1.2.1.1.2.1-75	s. The following FDEN categories shall be provided: FDENs associated with the Posted Fix field shall uniquely denote the pilot estimate at this fix and the actual time at this fix.	344
		3.7.1.2.1.1.2.1-76	s. These FDENs shall be automatically generated and displayed when the controller inputs a progress report which contains these coordination times.	344
		3.7.1.2.1.2.2-00	FLIGHT DATA CHANGES	373
		3.7.1.2.1.2.2-20	f. Hold: The option shall be provided to enter holding instructions, namely hold direction, turns, leg lengths, and time entering and time leaving hold.	375
		3.7.1.2.1.2.2-21	f. Hold: These holding instructions shall be processed only for the display of FDENs.	375
		3.7.1.2.1.2.2-23	g. Progress Report: This message shall be used to update the position in time of an active flight plan.	375
		3.7.1.2.1.2.2-26	h. Reported Altitude: In addition, the option shall be provided to denote that the reported altitude is a report reaching, a report leaving, or other than assigned altitude.	375
		3.7.1.2.1.2.2-27	h. Reported Altitude: These optional fields shall be processed only for the display of FDENs.	375
		3.7.1.2.1.2.2-57	v. Altitude Restriction Message: This message shall be used for processing controller reminders and for the display of FDENs.	378
		40.3.7.1.2.1.1.2.1-00	FLIGHT DATA FIELDS	781

Task to Requirement Traceability Matrix

Task Number	Task Statement	Paragraph Number	Requirement	Page No.
A1.1.6.11 (cont'd)	ENTER FDE NOTATIONS	40.3.7.1.2.1.1.2.1-01	a. The requirements of Section 3.7.1.2.1.1.2.1 shall apply to TAAS with the following exceptions: The Next Posted Fix, CTA at Next Posted Fix, Next Sector/Next Facility, Lateral Nonconformance Indicator, Metering/Traffic Management Advisory, and Metering/Traffic Management Advisory ... (See SLS).	781
		40.3.7.1.2.1.1.2.1-04	d. The requirements of Section 3.7.1.2.1.1.2.1 shall apply to TAAS with the following exceptions: The requirements for FDENs associated with assigned altitude are replaced as follows.	781
		40.3.7.1.2.1.1.2.1-05	d. FDENs associated with the assigned altitude field shall uniquely indicate 1) Verified assigned altitudes, 2) Altitude restrictions, 3) Assigned altitude inappropriate for the direction of flight, and/or 4) Fix crossing time.	781
		40.3.7.1.2.1.1.2.1-06	d. The capability shall be provided to display these FDENs simultaneously.	781
		40.3.7.1.2.1.1.2.1-07	d. An FDEN indicating an assigned altitude has been verified or a fix crossing time has been issued, shall be displayed upon controller FDEN entry.	781
		40.3.7.1.2.1.1.2.1-08	d. FDEN(s) indicating an altitude restriction(s) shall be generated when the controller inputs an altitude restriction message and shall be displayed at the entering position and all positions displaying an FDE for the flight up to and including the sector in which the altitude restriction applies.	782
		40.3.7.1.2.1.1.2.1-11	d. Upon controller FDEN entry, this FDEN shall denote that the wrong altitude for direction of flight has been approved with the next sector.	782
		40.3.7.1.2.1.1.2.1-12	e. FDENs associated with next fix data field (3.7.1.2.1.1.2.1 item i) do not apply to TAAS.	782
		40.3.7.1.2.1.2-00	CONTROLLER INPUT LANGUAGE PROCESSING	783
		40.3.7.1.2.1.2-07	c. For Flight Data Changes (Section 3.7.1.2.1.2.2) all messages shall be processed by TAAS except Emergency Airport, Implement Reroute, Implement Absorption Maneuver, Create/Delete Route, and Repetitive Route Amendment.	784
A1.1.6.12	DELETE FDE NOTATIONS	3.7.1.2.1.1.2.1-00	FLIGHT DATA FIELDS	341
		3.7.1.2.1.1.2.1-09	The capability shall be provided to display/delete FDE notations (FDENs) in specified fields of FDEs.	342

Task to Requirement Traceability Matrix

Task Number	Task Statement	Paragraph Number	Requirement	Page No.
A1.1.6.12 (cont'd)	DELETE FDE NOTATIONS	3.7.1.2.1.1.2.1-15	Unless otherwise noted, FDENs shall be displayed only at the operational position which has control of the track and shall be automatically deleted when the condition which generated the FDEN no longer exists, or upon controller deletion.	342
		40.3.7.1.2.1.1.2.1-00	FLIGHT DATA FIELDS	781
		40.3.7.1.2.1.1.2.1-01	a. The requirements of Section 3.7.1.2.1.1.2.1 shall apply to TAAS with the following exceptions: The Next Posted Fix, CTA at Next Posted Fix, Next Sector/Next Facility, Lateral Nonconformance Indicator, Metering/Traffic Management Advisory, and Metering/Traffic Management Advisory ... (See SLS).	781
A1.1.6.13	RESEQUENCE FLIGHT DATA ENTRY MANUALLY	40.3.7.1.2.1.1.2-00	FLIGHT DATA DISPLAY	779
		40.3.7.1.2.1.1.2-15	b. Ordering - Flight Data Entries shall be ordered either automatically or manually under controller command.	780
		40.3.7.1.2.1.1.2-19	b. Ordering - In manual ordering, the controller shall have the capability to put a new FDE in the appropriate place in a list and to move FDEs with respect to one another.	780
A1.1.6.14	DELETE CONTROLLER NOTE	3.7.1.2.1.1.1-00	SITUATION DISPLAY	323
		3.7.1.2.1.1.1.14-00	GEOGRAPHIC TAGGING	338
		3.7.1.2.1.1.1.14-02	The capability shall be provided for the controller to enter a string of alphanumerics starting at any geographic point designated by the CPSO or controller entered fix.	338
		3.7.1.2.1.1.18-00	CONTROLLER NOTEPAD DISPLAY	363
		3.7.1.2.1.1.18-01	The logical display shall contain controller-entered free-form text notes which have no 'semantic level' meaning to the system, but rather are treated as a string of undifferentiated characters.	363
		3.7.1.2.1.1.18-04	These notes shall only be displayed at the entering position and shall remain in the logical display until the controller takes action to delete them.	363
		40.3.7.1.2.1.1.1-00	SITUATION DISPLAY	779
		40.3.7.1.2.1.1.1-01	The requirements of Section 3.7.1.2.1.1.1 and subordinate sections shall apply to TAAS except that Graphic Weather from RWP, Conflict Resolution and MSAW Advisories, Route Display, and Flight Plan Conflict/Trial Plan Display are not required.	779

Task to Requirement Traceability Matrix

Task Number	Task Statement	Paragraph Number	Requirement	Page No.
A1.1.6.14 (cont'd)	DELETE CONTROLLER NOTE	40.3.7.1.2.1.1.11-00	CONTROLLER NOTEPAD DISPLAY	783
		40.3.7.1.2.1.1.11-01	The requirements of Section 3.7.1.2.1.1.10 shall apply to TAAS.	783
A1.1.6.15	DELETE SCRATCH PAD DATA IN FULL DATA BLOCK	3.7.1.2.1.1.1-00	SITUATION DISPLAY	323
		3.7.1.2.1.1.1.3-00	TARGET AND TRACK DATA AND SYMBOLOGY	330
		3.7.1.2.1.1.1.3-44	The information conveyed in the track position symbol and FDB shall be adaptable from the following set of data: Callsign, Mode C Altitude or Pilot Reported Altitude and indication of Pilot Reported Altitude, Handoff Status/Indicator, Aircraft Type, Assigned Altitude or Interim ... (See SLS).	332
		3.7.1.2.1.1.1.3-55	bk. Scratch Pad Data shall be entered by the controller and shall consist of up to three characters of information.	334
		40.3.7.1.2.1.1.1-00	SITUATION DISPLAY	779
		40.3.7.1.2.1.1.1-01	The requirements of Section 3.7.1.2.1.1.1 and subordinate sections shall apply to TAAS except that Graphic Weather from RWP, Conflict Resolution and MSAW Advisories, Route Display, and Flight Plan Conflict/Trial Plan Display are not required.	779
A1.1.6.75	DELETE FLIGHT DATA ENTRY AND FULL DATA BLOCK FROM LOCAL TAAS SYSTEM	3.7.1.2.1.2.2-00	FLIGHT DATA CHANGES	373
		3.7.1.2.1.2.2-08	b. Drop Flight Plan Internal: Flight Identification.	373
		3.7.1.2.1.2.2-09	b. Drop Flight Plan Internal: This message shall be used to delete all flight data for an IFR or VFR flight plan from the internal ACCC but will not transmit this delete to any other facility.	374
		40.3.7.1.2.1.2-00	CONTROLLER INPUT LANGUAGE PROCESSING	783
		40.3.7.1.2.1.2-07	c. For Flight Data Changes (Section 3.7.1.2.1.2.2) all messages shall be processed by TAAS except Emergency Airport, Implement Reroute, Implement Absorption Maneuver, Create/Delete Route, and Repetitive Route Amendment.	784
A1.2.1.1	DETECT AIRCRAFT CONFLICT ALERT INDICATION	3.7.1.1.3.5.1-00	CONFLICT ALERT	294
		3.7.1.1.3.5.1-22	The ACCC shall initiate alerts to appropriate control positions and alert subsequent processing functions when current or predicted conflicts are detected.	295

Task Number	Task Statement	Paragraph Number	Requirement	Page No.
A1.2.1.1 (cont'd)	DETECT AIRCRAFT CONFLICT ALERT INDICATION	3.7.1.2.1.1.1-00	SITUATION DISPLAY	323
		3.7.1.2.1.1.1.3-00	TARGET AND TRACK DATA AND SYMBOLOGY	330
		3.7.1.2.1.1.1.3-48	bd. The conflict alert indicator shall denote when a conflict alert has been calculated for an aircraft.	333
		3.7.1.2.1.1.1.3-58	cb. The following emergency and alert conditions shall be coded in the FDB: Conflict Alert.	334
		3.7.1.2.1.1.1.3-75	de. Some of the conditions that shall result in display of a FDB for a track are: Aircraft is in conflict with another track that is being presented in Full Data Block format at this sector.	335
		3.7.1.2.1.1.2.1-00	FLIGHT DATA FIELDS	341
		3.7.1.2.1.1.2.1-19	b. The following FDEN categories shall be provided: FDENs shall uniquely denote conflict alert and minimum safe altitude warning.	342
		3.7.1.2.1.1.2.1-20	b. These FDENs shall be automatically generated and displayed.	342
		40.3.7.1.1.3.4-00	SEPARATION ASSURANCE CAPABILITY	775
		40.3.7.1.1.3.4-01	a. The TAAS shall aid controllers: In the detection of short-term aircraft-track-to-aircraft-track separation violations when at least one of the two aircraft is controlled.	775
		40.3.7.1.1.3.4.1-00	CONFLICT ALERT	775
		40.3.7.1.1.3.4.1-01	The requirements of Section 3.7.1.1.3.5.1 shall apply to TAAS except that the capability for group suppression shall not be applicable.	775
		40.3.7.1.2.1.1.1-00	SITUATION DISPLAY	779
		40.3.7.1.2.1.1.1-01	The requirements of Section 3.7.1.2.1.1.1 and subordinate sections shall apply to TAAS except that Graphic Weather from RWP, Conflict Resolution and MSAW Advisories, Route Display, and Flight Plan Conflict/Trial Plan Display are not required.	779
		40.3.7.1.2.1.1.2.1-00	FLIGHT DATA FIELDS	781
		40.3.7.1.2.1.1.2.1-02	b. The requirements of Section 3.7.1.2.1.1.2.1 shall apply to TAAS with the following exceptions: FDENs associated with priority and advisory alerts (3.7.1.2.1.1.2.1 item c) do not apply to TAAS.	781

Task to Requirement Traceability Matrix

Task Number	Task Statement	Paragraph Number	Requirement	Page No.
A1.2.1.1 (cont'd)	DETECT AIRCRAFT CONFLICT ALERT INDICATION	4Ø.3.7.1.2.1.1.3-ØØ	ALERT AND RESOLUTION DISPLAY	782
		4Ø.3.7.1.2.1.1.3-Ø2	Conflict Alerts and Minimum Safe Altitude Warnings shall be displayed in the Alert and Resolution Display in a list with the callsign, alert type and condition.	782
		4Ø.3.7.1.2.1.1.3-Ø4	In addition to the Alert Display, these alerts may be shown on the Situation Display.	782
A1.2.1.5	FORWARD NOTICE OF AIRCRAFT CONFLICT TO SUPERVISOR	3.7.1.1.3.7.1-ØØ	ATC MAIL MESSAGE PROCESSING	299
		3.7.1.1.3.7.1-Ø1	The ACCC shall provide the capability to communicate via electronic media.	299
		4Ø.3.7.1.1.3.7.1-ØØ	ATC MAIL PROCESSING	776
		4Ø.3.7.1.1.3.7.1-Ø1	The requirements of Section 3.7.1.1.3.7.1 shall apply to TAAS.	776
A1.2.1.7	REVIEW POTENTIAL CONFLICT SITUATION FOR RESOLUTION	4Ø.3.7.1.2.1.1.1-ØØ	SITUATION DISPLAY	779
		4Ø.3.7.1.2.1.1.2-ØØ	FLIGHT DATA DISPLAY	779
		4Ø.3.7.1.2.1.1.3-ØØ	ALERT AND RESOLUTION DISPLAY	782
		4Ø.3.7.1.2.1.1.3-Ø1	This logical display shall contain information on alert conditions detected by the TAAS or input by a controller.	782
		4Ø.3.7.1.2.1.1.3-Ø2	Conflict Alerts and Minimum Safe Altitude Warnings shall be displayed in the Alert and Resolution Display in a list with the callsign, alert type and condition.	782
		4Ø.3.7.1.2.1.1.3-Ø3	The alert entries in the list shall remain displayed until the alert condition no longer exists or the controller suppresses the alert from the display.	782
		4Ø.3.7.1.2.1.1.3-Ø4	In addition to the Alert Display, these alerts may be shown on the Situation Display.	782
A1.2.1.8	DETERMINE APPROPRIATE ACTION TO RESOLVE AIRCRAFT CONFLICT SITUATION	4Ø.3.7.1.2.1.1.1-ØØ	SITUATION DISPLAY	779
		4Ø.3.7.1.2.1.1.2-ØØ	FLIGHT DATA DISPLAY	779
		4Ø.3.7.1.2.1.1.3-ØØ	ALERT AND RESOLUTION DISPLAY	782
A1.2.1.9	PERCEIVE POTENTIAL AIRCRAFT CONFLICT SITUATION	4Ø.3.7.1.2.1.1.1-Ø5	SITUATION DISPLAY	779

Task to Requirement Traceability Matrix

Task Number	Task Statement	Paragraph Number	Requirement	Page No.
A1.2.1.9 (cont'd)	PERCEIVE POTENTIAL AIRCRAFT CONFLICT SITUATION	40.3.7.1.2.1.1.2-00	FLIGHT DATA DISPLAY	779
A1.2.2.1	DETECT MSAW INDICATION OR ALARM	3.7.1.1.3.5.2-00	MINIMUM SAFE ALTITUDE WARNING	295
		3.7.1.1.3.5.2-01	The ACCC shall provide the capability of detecting conflicts between an aircraft's projected flight path and the location of adapted airspace regions.	295
		3.7.1.1.3.5.2-04	Upon detection of current or imminent violations of such airspace regions within the look-ahead time period, aural and visual alerts shall be provided to the appropriate control room personnel.	295
		3.7.1.1.3.5.2-17	The ACCC shall initiate alerts to appropriate control positions and alert subsequent processing functions when current or predicted conflicts are detected.	296
		3.7.1.2.1.1.1-00	SITUATION DISPLAY	323
		3.7.1.2.1.1.1.3-00	TARGET AND TRACK DATA AND SYMBOLOGY	330
		3.7.1.2.1.1.1.3-49	be. The minimum safe altitude warning indicator shall denote when an MSAW alert has been calculated for an aircraft.	333
		3.7.1.2.1.1.1.3-59	cc. The following emergency and alert conditions shall be coded in the FDB: Minimum Safe Altitude Warning.	334
		3.7.1.2.1.1.2.1-00	FLIGHT DATA FIELDS	341
		3.7.1.2.1.1.2.1-19	b. The following FDEN categories shall be provided: FDENs shall uniquely denote conflict alert and minimum safe altitude warning.	342
		3.7.1.2.1.1.2.1-20	b. These FDENs shall be automatically generated and displayed.	342
		40.3.7.1.1.3.4-00	SEPARATION ASSURANCE CAPABILITY	775
		40.3.7.1.1.3.4-02	b. The TAAS shall aid controllers: In ensuring that Mode C transponder-equipped controlled aircraft avoid adapted airspace and terrain volumes.	775
		40.3.7.1.1.3.4.2-00	MINIMUM SAFE ALTITUDE WARNING	775
		40.3.7.1.1.3.4.2-01	The requirements of Section 3.7.1.1.3.5.2 shall apply to TAAS except that the term conflict only applies to an aircraft flying in too close proximity with terrain or other physical obstacles.	775
		40.3.7.1.2.1.1.1-00	SITUATION DISPLAY	779

Task to Requirement Traceability Matrix

Task Number	Task Statement	Paragraph Number	Requirement	Page No.
A1.2.2.1 (cont'd)	DETECT MSAW INDICATION OR ALARM	40.3.7.1.2.1.1.1-01	The requirements of Section 3.7.1.2.1.1.1 and subordinate sections shall apply to TAAS except that Graphic Weather from RWP, Conflict Resolution and MSAW Advisories, Route Display, and Flight Plan Conflict/Trial Plan Display are not required.	779
		40.3.7.1.2.1.1.2.1-00	FLIGHT DATA FIELDS	781
		40.3.7.1.2.1.1.2.1-02	b. The requirements of Section 3.7.1.2.1.1.2.1 shall apply to TAAS with the following exceptions: FDENs associated with priority and advisory alerts (3.7.1.2.1.1.2.1 item c) do not apply to TAAS.	781
		40.3.7.1.2.1.1.3-00	ALERT AND RESOLUTION DISPLAY	782
		40.3.7.1.2.1.1.3-02	Conflict Alerts and Minimum Safe Altitude Warnings shall be displayed in the Alert and Resolution Display in a list with the callsign, alert type and condition.	782
		40.3.7.1.2.1.1.3-04	In addition to the Alert Display, these alerts may be shown on the Situation Display.	782
A1.2.2.2	FORWARD NOTICE OF VALID MSAW OR FLIGHT ASSIST TO SUPERVISOR	3.7.1.1.3.7.1-00	ATC MAIL MESSAGE PROCESSING	299
		3.7.1.1.3.7.1-01	The ACCC shall provide the capability to communicate via electronic medic.	299
		40.3.7.1.1.3.7.1-00	ATC MAIL PROCESSING	776
		40.3.7.1.1.3.7.1-01	The requirements of Section 3.7.1.1.3.7.1 shall apply to TAAS.	776
A1.2.2.5	PERCEIVE POTENTIAL LOW ALTITUDE SITUATION	3.7.1.2.1.1.1-00	SITUATION DISPLAY	323
		3.7.1.2.1.1.1.2-00	GEOGRAPHIC MAP DATA	323
		3.7.1.2.1.1.1.2-03	These categories shall include, but not be limited to, several groups of fixes, several groups of airways sector boundaries grouped by altitude, special use airspace boundaries, airports, obstructions, fixes, minimum vector altitudes (MVA), military routes, holding pattern ... (See SLS).	324
		40.3.7.1.2.1.1 1-00	SITUATION DISPLAY	779
		40.3.7.1.2 1.1.1-01	The requirements of Section 3.7.1.2.1.1.1 and subordinate sections shall apply to TAAS except that Graphic Weather from RWP Conflict Resolution and MSAW Advisories, Route Display, and Flight Plan Conflict/Trial Plan Display are not required.	779
		40.3.7.1.2.1.1.2-00	FLIGHT DATA DISPLAY	779

Task to Requirement Traceability Matrix

Task Number	Task Statement	Paragraph Number	Requirement	Page No.
A1.2.2.7	DETERMINE APPROPRIATE ACTION TO RESOLVE LOW ALTITUDE SITUATION	40.3.7.1.2.1.1.1-00	SITUATION DISPLAY	779
		40.3.7.1.2.1.1.2-00	FLIGHT DATA DISPLAY	779
		40.3.7 1.2.1.1.3-00	ALERT AND RESOLUTION DISPLAY	782
A1.2.3.1	INFORM CONTROLLER OF POTENTIAL AIRSPACE CONFLICT IN HIS SECTOR	3.7.1.1.3.7.1-00	ATC MAIL MESSAGE PROCESSING	299
		3.7.1.1.3.7.1-01	The ACCC shall provide the capability to communicate via electronic media	299
		40.3.7.1.1.3.7.1-00	ATC MAIL PROCESSING	776
		40.3.7.1.1.3.7.1-01	The requirements of Section 3.7 1 1.3 7.1 shall apply to TAAS.	776
A1.2 3 3	REQUEST RELEASE OF SPECIAL USE AIRSPACE	3.7.1.1.3.7 1-00	ATC MAIL MESSAGE PROCESSING	299
		3 7.1.1.3.7.1-01	The ACCC shall provide the capability to communicate via electronic media.	299
		40.3.7.1.1.3 7.1-00	ATC MAIL PROCESSING	776
		40.3.7.1 1.3 7.1-01	The requirements of Section 3.7.1 1.3 7.1 shall apply to TAAS	776
A1.2 3 4	RECEIVE DENIAL OF USE OF SPECIAL USE AIRSPACE	3.7.1.1.3.7.1-00	ATC MAIL MESSAGE PROCESSING	299
		3.7.1.1 3.7.1-01	The ACCC shall provide the capability to communicate via electronic media	299
		40 3.7 1.1.3.7 1 00	ATC MAIL PROCESSING	776
		40.3 7.1.1.3 7.1-01	The requirements of Section 3.7.1.1.3.7.1 shall apply to TAAS.	776
A1.2.3.5	RECEIVE APPROVAL FOR USE OF SPECIAL USE AIRSPACE	3 7.1.1.3 7.1-00	ATC MAIL MESSAGE PROCESSING	299
		3.7.1.1 3.7 1 01	The ACCC shall provide the capability to communicate via electronic media	299
		40 3.7.1.1 3 7.1 00	ATC MAIL PROCESSING	776
		40 3 7.1 1.3 7 1 01	The requirements of Section 3.7.1.1.3.7.1 shall apply to TAAS.	776
A1.2 3 7	PERCEIVE POTENTIAL AIRSPACE CONFLICT SITUATION	3.7.1.2.1.1.1-00	SITUATION DISPLAY	323
		3.7.1 2.1.1.1.2-00	GEOGRAPHIC MAP DATA	323

Task to Requirement Traceability Matrix

Task Number	Task Statement	Paragraph Number	Requirement	Page No.
A1.2.3.7 (cont'd)	PERCEIVE POTENTIAL AIRSPACE CONFLICT SITUATION	40.3.7.1.2.1.1.1-00	SITUATION DISPLAY	779
		40.3.7.1.2.1.1.1-01	The requirements of Section 3.7.1.2.1.1.1 and subordinate sections shall apply to TAAS except that Graphic Weather from RWP, Conflict Resolution and MSAW Advisories, Route Display, and Flight Plan Conflict/Trial Plan Display are not required.	779
		40.3.7.1.2.1.1.2-00	FLIGHT DATA DISPLAY	779
A1.2.3.8	DETERMINE APPROPRIATE ACTION TO RESOLVE AIRSPACE CONFLICT SITUATION	40.3.7.1.2.1.1.1-00	SITUATION DISPLAY	779
		40.3.7.1.2.1.1.2-00	FLIGHT DATA DISPLAY	779
		40.3.7.1.2.1.1.3-00	ALERT AND RESOLUTION DISPLAY	782
A1.2.4.1	OBSERVE DISPLAY FOR FIXED OBSTRUCTIONS THAT MAY INTERFERE WITH AIRCRAFT FLIGHT	3.7.1.2.1.1.1-00	SITUATION DISPLAY	325
		3.7.1.2.1.1.2-00	GEOGRAPHIC MAP DATA	327
		3.7.1.2.1.1.3-00	TARGET AND TRACK DATA AND SYMBOLOGY	336
		40.3.7.1.2.1.1.1-00	SITUATION DISPLAY	779
		40.3.7.1.2.1.1.1-01	The requirements of Section 3.7.1.2.1.1.1 and subordinate sections shall apply to TAAS except that Graphic Weather from RWP, Conflict Resolution and MSAW Advisories, Route Display, and Flight Plan Conflict/Trial Plan Display are not required.	779
		40.3.7.1.2.1.1.2-00	FLIGHT DATA DISPLAY	779
A1.2.4.4	DETECT AIRCRAFT MANEUVER IN RESPONSE TO ADVISORY/ ALERT	3.7.1.2.1.1.1-00	SITUATION DISPLAY	325
		3.7.1.2.1.1.3-00	TARGET AND TRACK DATA AND SYMBOLOGY	336
		40.3.7.1.2.1.1.1-00	SITUATION DISPLAY	779
		40.3.7.1.2.1.1.1-01	The requirements of Section 3.7.1.2.1.1.1 and subordinate sections shall apply to TAAS except that Graphic Weather from RWP, Conflict Resolution and MSAW Advisories, Route Display, and Flight Plan Conflict/Trial Plan Display are not required.	779
A1.2.4.13	OBSERVE DISPLAY FOR NON-CONTROLLED AIRBORNE OBJECTS THAT MAY INTERFERE WITH AIRCRAFT FLIGHT	3.7.1.2.1.1.1-00	SITUATION DISPLAY	325

Task to Requirement Traceability Matrix

Task Number	Task Statement	Paragraph Number	Requirement	Page No.
A1.2.4.13 (cont'd)	OBSERVE DISPLAY FOR NON-CONTROLLED AIRBORNE OBJECTS THAT MAY INTERFERE WITH AIRCRAFT FLIGHT	3.7.1.2.1.1.1.3-00	TARGET AND TRACK DATA AND SYMBOLOGY	330
		40.3.7.1.2.1.1.1-00	SITUATION DISPLAY	779
		40.3.7.1.2.1.1.1-01	The requirements of Section 3.7.1.2.1.1.1 and subordinate sections shall apply to TAAS except that Graphic Weather from RWP, Conflict Resolution and MSAW Advisories, Route Display, and Flight Plan Conflict/Trial Plan Display are not required.	770
A1.2.5.2	SUPPRESS CONFLICT ALERT FOR PAIRED AIRCRAFT	3.7.1.1.3.5.1-00	CONFLICT ALERT	294
		3.7.1.1.3.5.1-21	The ACCC shall also provide the capability to inhibit Conflict Alert generation for aircraft operating in adapted airspace volumes and for selected aircraft pairs and groups.	295
		3.7.1.2.1.2.1-00	TRACK CONTROL	368
		3.7.1.2.1.2.1-21	1. Suppress/Restore Conflict Alert Pair/Conflict Resolution Advisory: Flight Identification (Aircraft 1), Flight Identification (Aircraft 2), (Suppress/Restore Alert Indicator), (Suppress/Restore Resolution Advisory (all displays)).	369
		3.7.1.2.1.2.1-22	1. Suppress/Restore Conflict Alert Pair/Conflict Resolution Advisory: This message shall be used to suppress/restore the display of conflict alert and conflict resolution information after it is forced at a sector by the Conflict Alert and Conflict Resolution Advisory functions.	369
		40.3.7.1.1.3.4.1-00	CONFLICT ALERT	775
		40.3.7.1.1.3.4.1-01	The requirements of Section 3.7.1.1.3.5.1 shall apply to TAAS except that the capability for group suppression shall not be applicable.	775
		40.3.7.1.2.1.1.3-00	ALERT AND RESOLUTION DISPLAY	782
		40.3.7.1.2.1.1.3-05	The alert entries in the list shall remain displayed until the alert condition no longer exists or the controller suppresses the alert from the display.	782
		40.3.7.1.2.1.2-00	CONTROLLER INPUT LANGUAGE PROCESSING	783

Task Number	Task Statement	Paragraph Number	Requirement	Page No.
A1.2.5.2 (cont'd)	SUPPRESS CONFLICT ALERT FOR PAIRED AIRCRAFT	40.3.7.1.2.1.2-02	b. For track control messages all messages except Inhibit/Restore Automatic Pointout, Group Suppression, Vertical Velocity Readout, Flight Plan Extrapolation, Fix/Time Readout, Range/Bearing Readout, Range/Bearing/Fix Readout, Continuous Range Readout, and Radar Contact shall be processed.	783
		40.3.7.1.2.1.2-03	b. The use of the conflict resolution advisory portion of a Suppress/Restore Conflict Alert Pair/Conflict Resolution Advisory message or a Suppress/Restore MSAW Alert/Conflict Resolution Advisory message to suppress or restore conflict resolution advisories shall not apply to TAAS.	784
A1.2.5.5	SUPPRESS MSAW FUNCTION FOR AN AIRCRAFT	3.7.1.1.3.5.2-00	MINIMUM SAFE ALTITUDE WARNING	295
		3.7.1.1.3.5.2-16	The ACCC shall provide the capability of inhibiting MSAW alerts for selected aircraft and aircraft operating in selected airspace.	296
		3.7.1.2 1.2.1-00	TRACK CONTROL	368
		3.7.1.2.1.2.1-32	ja. Suppress/Restore MSAW Alert/Conflict Resolution Advisory: Flight Identification, (Suppress Alert Indicator), (Suppress Resolution Advisory (all displays)), (Facility).	370
		3.7.1.2.1.2.1-33	ja. Suppress/Restore MSAW Alert/Conflict Resolution Advisory: This message shall be used to suppress/restore the display of MSAW alerts and MSAW resolution for a single aircraft either for that particular sector or the entire facility after display of that information has been ... (See SLS).	370
		40.3.7.1.1.3.4.2-00	MINIMUM SAFE ALTITUDE WARNING	775
		40.3.7.1.1.3.4.2-01	The requirements of Section 3.7.1.1.3.5.2 shall apply to TAAS except that the term conflict only applies to an aircraft flying in too close proximity with terrain or other physical obstacles.	775
		40.3.7.1.2.1.1.3-00	ALERT AND RESOLUTION DISPLAY	782
		40.3.7 1.2.1.1.3-05	The alert entries in the list shall remain displayed until the alert condition no longer exists or the controller suppresses the alert from the display.	782
		40.3.7.1.2.1.2-00	CONTROLLER INPUT LANGUAGE PROCESSING	783
		40.3.7.1.2.1.2-02	b. For track control messages all messages except Inhibit/Restore Automatic Pointout, Group Suppression, Vertical Velocity Readout, Flight Plan Extrapolation, Fix/Time Readout, Range/Bearing Readout, Range/Bearing/Fix Readout, Continuous Range Readout, and Radar Contact shall be processed.	783

Task to Requirement Traceability Matrix

Task Number	Task Statement	Paragraph Number	Requirement	Page No.
A1.2.5.5 (cont'd)	SUPPRESS MSAW FUNCTION FOR AN AIRCRAFT	40.3.7.1.2.1.2-03	b. The use of the conflict resolution advisory portion of a Suppress/Restore Conflict Alert Pair/Conflict Resolution Advisory message or a Suppress/Restore MSAW Alert/Conflict Resolution Advisory message to suppress or restore conflict resolution advisories shall not apply to TAAS.	784
A1.2.5.75	DETERMINE VALIDITY/ APPROPRIATENESS OF DISPLAY OF AN ALERT	40.3.7.1.2.1.1.1-00	SITUATION DISPLAY	779
		40.3.7.1.2.1.1.2-00	FLIGHT DATA DISPLAY	779
		40.3.7.1.2.1.1.3-00	ALERT AND RESOLUTION DISPLAY	782
A1.2.5.76	RESTORE SPECIFIC ALERT FUNCTION TO NORMAL	3.7.1.2.1.2.1-00	TRACK CONTROL	368
		3.7.1.2.1.2.1-21	i. Suppress/Restore Conflict Alert Pair/Conflict Resolution Advisory: Flight Identification (Aircraft 1), Flight Identification (Aircraft 2), (Suppress/Restore Alert Indicator), (Suppress/Restore Resolution Advisory (all displays)).	369
		3.7.1.2.1.2.1-22	i. Suppress/Restore Conflict Alert Pair/Conflict Resolution Advisory: This message shall be used to suppress/restore the display of conflict alert and conflict resolution information after it is forced at a sector by the Conflict Alert and Conflict Resolution Advisory functions.	369
		3.7.1.2.1.2.1-32	ja. Suppress/Restore MSAW Alert/Conflict Resolution Advisory: Flight Identification, (Suppress Alert Indicator), (Suppress Resolution Advisory (all displays)), (Facility).	370
		3.7.1.2.1.2.1-33	ja. Suppress/Restore MSAW Alert/Conflict Resolution Advisory: This message shall be used to suppress/restore the display of MSAW alerts and MSAW resolution for a single aircraft either for that particular sector or the entire facility after display of that information has been ... (See SLS).	370
		40.3.7.1.2.1.2-00	CONTROLLER INPUT LANGUAGE PROCESSING	783
		40.3.7.1.2.1.2-02	b. For track control messages all messages except Inhibit/Restore Automatic Pointout, Group Suppression, Vertical Velocity Readout, Flight Plan Extrapolation, Fix/Time Readout, Range/Bearing Readout, Range/Bearing/Fix Readout, Continuous Range Readout, and Radar Contact shall be processed	783
		40.3.7.1.2.1.2-03	b. The use of the conflict resolution advisory portion of a Suppress/Restore Conflict Alert Pair/Conflict Resolution Advisory message or a Suppress/Restore MSAW Alert/Conflict Resolution Advisory message to suppress or restore conflict resolution advisories shall not apply to TAAS.	784

Task to Requirement Traceability Matrix

Task Number	Task Statement	Paragraph Number	Requirement	Page No.
A1.3.1.1	EVALUATE TRAFFIC MANAGEMENT CONSTRAINTS FOR EFFECT ON TRAFFIC FLOW	40.3.7.1.1.3.7.1-00	ATC MAIL PROCESSING	776
		40.3.7.1.2.1.1.1-00	SITUATION DISPLAY	779
		40.3.7.1.2.1.1.2-00	FLIGHT DATA DISPLAY	779
		40.3.7.1.2.1.1.4-00	SPECIAL LISTS	782
A1.3.1.2	CHOOSE OPTION TO BRING AIRCRAFT INTO CONFORMANCE WITH TRAFFIC MANAGEMENT RESTRICTIONS	40.3.7.1.2.1.1.1-00	SITUATION DISPLAY	779
		40.3.7.1.2.1.1.2-00	FLIGHT DATA DISPLAY	779
A1.3.1.6	RECEIVE TRAFFIC MANAGEMENT RESTRICTION	3.7.1.1.3.7.1-00	ATC MAIL MESSAGE PROCESSING	299
		3.7.1.1.3.7.1-01	The ACCC shall provide the capability to communicate via electronic media.	299
		40.3.7.1.1.3.7.1-00	ATC MAIL PROCESSING	776
		40.3.7.1.1.3.7.1-01	The requirements of Section 3.7.1.1.3.7.1 shall apply to TAAS.	776
A1.3.1.8	RECEIVE SUPERVISOR NOTICE TO HOLD/ REROUTE TRAFFIC CLEAR OF CONTINGENCY	3.7.1.1.3.7.1-00	ATC MAIL MESSAGE PROCESSING	299
		3.7.1.1.3.7.1-01	The ACCC shall provide the capability to communicate via electronic media.	299
		40.3.7.1.1.3.7.1-00	ATC MAIL PROCESSING	776
		40.3.7.1.1.3.7.1-01	The requirements of Section 3.7.1.1.3.7.1 shall apply to TAAS.	776
A1.3.1.9	REQUEST EXCEPTION TO TRAFFIC MANAGEMENT RESTRICTION	3.7.1.1.3.7.1-00	ATC MAIL MESSAGE PROCESSING	299
		3.7.1.1.3.7.1-01	The ACCC shall provide the capability to communicate via electronic media.	299
		40.3.7.1.1.3.7.1-00	ATC MAIL PROCESSING	776
		40.3.7.1.1.3.7.1-01	The requirements of Section 3.7.1.1.3.7.1 shall apply to TAAS.	776
A1.3.1.10	REVIEW TRAFFIC DEMANDS AND TRAFFIC MANAGEMENT RESTRICTIONS WITH SUPERVISOR	3.7.1.1.3.7.1-00	ATC MAIL MESSAGE PROCESSING	299
		3.7.1.1.3.7.1-01	The ACCC shall provide the capability to communicate via electronic media.	299

Task to Requirement Traceability Matrix

Task Number	Task Statement	Paragraph Number	Requirement	Page No.
A1 3.1.15 (cont'd)	REVIEW TRAFFIC DEMANDS AND TRAFFIC MANAGEMENT RESTRICTIONS WITH SUPERVISOR	40.3.7.1.1.3.7.1-00	ATC MAIL PROCESSING	776
		40.3.7.1.1.3.7.1-01	The requirements of Section 3.7.1.1.3.7.1 shall apply to TAAS.	776
		40.3.7.1.2.1.1.1-00	SITUATION DISPLAY	779
		40.3.7.1.2.1.1.2-00	FLIGHT DATA DISPLAY	779
A1.3.1.13	RECEIVE APPROVAL OF REQUEST FOR EXCEPTION TO FLOW RESTRICTION	3.7.1.1.3.7.1-00	ATC MAIL MESSAGE PROCESSING	299
		3.7.1.1.3.7.1-01	The ACCC shall provide the capability to communicate via electronic media.	299
		40.3.7.1.1.3.7.1-00	ATC MAIL PROCESSING	776
		40.3.7.1.1.3.7.1-01	The requirements of Section 3.7.1.1.3.7.1 shall apply to TAAS.	776
A1.3.1.14	RECEIVE DENIAL OF REQUEST FOR EXCEPTION TO FLOW RESTRICTION	3.7.1.1.3.7.1-00	ATC MAIL MESSAGE PROCESSING	299
		3.7.1.1.3.7.1-01	The ACCC shall provide the capability to communicate via electronic media.	299
		40.3.7.1.1.3.7.1-00	ATC MAIL PROCESSING	776
		40.3.7.1.1.3.7.1-01	The requirements of Section 3.7.1.1.3.7.1 shall apply to TAAS.	776
A1.3.1.75	REQUEST TRAFFIC MANAGEMENT ADVISORIES	3.7.1.1.3.7.1-00	ATC MAIL MESSAGE PROCESSING	299
		3.7.1.1.3.7.1-01	The ACCC shall provide the capability to communicate via electronic media.	299
		40.3.7.1.1.3.7.1-00	ATC MAIL PROCESSING	776
		40.3.7.1.1.3.7.1-01	The requirements of Section 3.7.1.1.3.7.1 shall apply to TAAS.	776
A1.3.2.1	PERCEIVE AN ALTITUDE OR ROUTE DEVIATION	3.7.1.2.1.1.1-00	SITUATION DISPLAY	323
		3.7.1.2.1.1.1.3-00	TARGET AND TRACK DATA AND SYMBOLOGY	330
		40.3.7.1.2.1.1.1-00	SITUATION DISPLAY	779

Task Number	Task Statement	Paragraph Number	Requirement	Page No.
A1.3.2.1 (cont'd)	PERCEIVE AN ALTITUDE OR ROUTE DEVIATION	40.3.7.1.2.1.1.1-01	The requirements of Section 3.7.1.2.1.1.1 and subordinate sections shall apply to TAAS except that Graphic Weather from RWP, Conflict Resolution and MSAW Advisories, Route Display, and Flight Plan Conflict/Trial Plan Display are not required.	779
		40.3.7.1.2.1.1.2-00	FLIGHT DATA DISPLAY	779
A1.3.2.2	OBSERVE AIRCRAFT RESUMING NORMAL FLIGHT PLAN	3.7.1.2.1.1.1-00	SITUATION DISPLAY	323
		3.7.1.2.1.1.2-00	GEOGRAPHIC MAP DATA	323
		3.7.1.2.1.1.3-00	TARGET AND TRACK DATA AND SYMBOLOGY	330
		3.7.1.2.1.1.3-17	The controller shall be able to select and deselect the display of each category of target or track data and up to five previous positions of history data.	331
		3.7.1.2.1.1.3-86	Movement of the displayed data block shall be minimal on a scan-to-scan basis.	335
		3.7.1.2.1.1.4-00	TRACK VECTOR	336
		3.7.1.2.1.1.4-01	The Situation Display shall contain a velocity/distance vector associated with each track.	336
		40.3.7.1.2.1.1.1-00	SITUATION DISPLAY	779
		40.3.7.1.2.1.1.1-01	The requirements of Section 3.7.1.2.1.1.1 and subordinate sections shall apply to TAAS except that Graphic Weather from RWP, Conflict Resolution and MSAW Advisories, Route Display, and Flight Plan Conflict/Trial Plan Display are not required.	779
A1.3.2.4	RECEIVE CONTROLLER NOTICE OF AIRCRAFT FLIGHT PLAN DEVIATION	3.7.1.1.3.7.1-00	ATC MAIL MESSAGE PROCESSING	299
		3.7.1.1.3.7.1-01	The ACCC shall provide the capability to communicate via electronic media.	299
		40.3.7.1.1.3.7.1-00	ATC MAIL PROCESSING	776
		40.3.7.1.1.3.7.1-01	The requirements of Section 3.7.1.1.3.7.1 shall apply to TAAS	776
A1.3.2.5	INFORM CONTROLLER/ SUPERVISOR OF AIRCRAFT FLIGHT PLAN DEVIATION	3.7.1.1.3.7.1-00	ATC MAIL MESSAGE PROCESSING	299
		3.7.1.1.3.7.1-01	The ACCC shall provide the capability to communicate via electronic media.	299
		40.3.7.1.1.3.7.1-00	ATC MAIL PROCESSING	776

Task Number	Task Statement	Paragraph Number	Requirement	Page No.
A1.3.2.5 (cont'd)	INFORM CONTROLLER/ SUPERVISOR OF AIRCRAFT FLIGHT PLAN DEVIATION	40.3.7.1.1.3.7.1-01	The requirements of Section 3.7.1.1.3.7.1 shall apply to TAAS.	776
A1.3.2.6	REQUEST DISPLAY OF FDE FOR FLIGHT PLAN	3.7.1.2.1.2.2-00	FLIGHT DATA CHANGES	373
		3.7.1.2.1.2.2-42	p. Request FDEs: (Sector Number and/or Facility), (Posting List Header), (Flight Identification(s)).	376
		3.7.1.2.1.2.2-43	p. Request FDEs: This message shall enable the controller to request one or more FDEs from another sector and/or facility to be displayed in the Flight Data Area at the requesting sector.	377
		40.3.7.1.2.1.1.2-00	FLIGHT DATA DISPLAY	779
		40.3.7.1.2.1.1.2-01	This logical display shall contain flight information for aircraft under the control of the sector, those not yet under the control of the sector, and those of interest to the sector.	779
		40.3.7.1.2.1.2-00	CONTROLLER INPUT LANGUAGE PROCESSING	783
		40.3.7.1.2.1.2-07	c. For Flight Data Changes (Section 3.7.1.2.1.2.2) all messages shall be processed by TAAS except Emergency Airport, Implement Reroute, Implement Absorption Maneuver, Create/Delete Route, and Repetitive Route Amendment.	784
A1.3.2.10	EVALUATE FLIGHT DATA TO DETERMINE FUTURE COURSE OF ACTION	3.7.1.2.1.1.2.1-00	FLIGHT DATA FIELDS	341
		3.7.1.2.1.1.2.1-03	Table 3.7-1 lists the Flight Plan Data fields with the maximum number of characters in the field. (See SLS).	341
		40.3.7.1.2.1.1.2-00	FLIGHT DATA DISPLAY	779
		40.3.7.1.2.1.1.2-01	This logical display shall contain flight information for aircraft under the control of the sector, those not yet under the control of the sector, and those of interest to the sector.	779
		40.3.7.1.2.1.1.2.1-00	FLIGHT DATA FIELDS	781
		40.3.7.1.2.1.1.2.1-01	a. The requirements of Section 3.7.1.2.1.1.2.1 shall apply to TAAS with the following exceptions: The Next Posted Fix, CTA at Next Posted Fix, Next Sector/Next Facility, Lateral Nonconformance Indicator, Metering/Traffic Management Advisory, and Metering/Traffic Management Advisory ... (See SLS).	781

Task Number	Task Statement	Paragraph Number	Requirement	Page No.
A1.3.2.12	EVALUATE ALTITUDE NONCONFORMANCE INDICATION FOR ACTION NEEDED	3.7.1.2.1.1.1-00	SITUATION DISPLAY	323
		3.7.1.2.1.1.1.2-00	GEOGRAPHIC MAP DATA	323
		3.7.1.2.1.1.1.3-00	TARGET AND TRACK DATA AND SYMBOLOGY	330
		3.7.1.2.1.1.1.3-44	The information conveyed in the track position symbol and FDB shall be adaptable from the following set of data: Callsign, Mode C Altitude or Pilot Reported Altitude and indication of Pilot Reported Altitude, Handoff Status/Indicator, Aircraft Type, Assigned Altitude or Interim ... (See SLS).	332
		3.7.1.2.1.1.1.3-66	cj. The following emergency and alert conditions shall be coded in the FDB: Altitude non-conformance.	334
		40.3.7.1.2.1.1.1-00	SITUATION DISPLAY	779
		40.3.7.1.2.1.1.1-01	The requirements of Section 3.7.1.2.1.1.1 and subordinate sections shall apply to TAAS except that Graphic Weather from RWP, Conflict Resolution and MSAW Advisories, Route Display, and Flight Plan Conflict/Trial Plan Display are not required.	779
A1.3.2.13	EVALUATE UNREASONABLE MODE C INDICATION FOR ACTION NEEDED	3.7.1.2.1.1.1-00	SITUATION DISPLAY	323
		3.7.1.2.1.1.1.3-00	TARGET AND TRACK DATA AND SYMBOLOGY	330
		3.7.1.2.1.1.1.3-46	bb. Altitude nonconformance indicator shall denote the status of a tracked aircraft's reported altitude in relation to its assigned altitude. In addition, it shall denote when Mode C fails Mode C reasonableness checks.	333
		40.3.7.1.2.1.1.1-00	SITUATION DISPLAY	779
		40.3.7.1.2.1.1.1-01	The requirements of Section 3.7.1.2.1.1.1 and subordinate sections shall apply to TAAS except that Graphic Weather from RWP, Conflict Resolution and MSAW Advisories, Route Display, and Flight Plan Conflict/Trial Plan Display are not required.	779
A1.3.2.14	DETECT UNREASONABLE MODE C INDICATION	3.7.1.2.1.1.1-00	SITUATION DISPLAY	323
		3.7.1.2.1.1.1.3-00	TARGET AND TRACK DATA AND SYMBOLOGY	330
		3.7.1.2.1.1.1.3-46	bb. Altitude nonconformance indicator shall denote the status of a tracked aircraft's reported altitude in relation to its assigned altitude. In addition, it shall denote when Mode C fails Mode C reasonableness checks.	333

Task Number	Task Statement	Paragraph Number	Requirement	Page No.
A1.3.2.14 (cont'd)	DETECT UNREASONABLE MODE C INDICATION	40.3.7.1.2.1.1.1-00	SITUATION DISPLAY	779
		40.3.7.1.2.1.1.1-01	The requirements of Section 3.7.1.2.1.1.1 and subordinate sections shall apply to TAAS except that Graphic Weather from RWP, Conflict Resolution and MSAW Advisories, Route Display, and Flight Plan Conflict/Trial Plan Display are not required.	779
A1.3.2.75	DETECT ALTITUDE NONCONFORMANCE INDICATION	3.7.1.2.1.1.1-00	SITUATION DISPLAY	323
		3.7.1.2.1.1.3-00	TARGET AND TRACK DATA AND SYMBOLOGY	330
		3.7.1.2.1.1.3-29	d. Track status shall be coded within the track position symbol, leader line, or FDB and shall denote when a track is in coast, hold, flight plan extrapolation, or out of association with its paired flight plan.	331
		3.7.1.2.1.1.3-44	The information conveyed in the track position symbol and FDB shall be adaptable from the following set of data: Callsign, Mode C Altitude or Pilot Reported Altitude and indication of Pilot Reported Altitude, Handoff Status/Indicator, Aircraft Type, Assigned Altitude or Interim ... (See SLS).	332
		3.7.1.2.1.1.3-46	bb. Altitude nonconformance indicator shall denote the status of a tracked aircraft's reported altitude in relation to its assigned altitude. In addition, it shall denote when Mode C fails Mode C reasonableness checks.	333
		3.7.1.2.1.1.3-66	cj. The following emergency and alert conditions shall be coded in the FDB: Altitude non-conformance.	334
		3.7.1.2.1.1.2.1-00	FLIGHT DATA FIELDS	341
		3.7.1.2.1.1.2.1-03	Table 3.7-1 lists the Flight Plan Data fields with the maximum number of characters in the field. (See SLS).	341
		40.3.7.1.2.1.1.1-00	SITUATION DISPLAY	779
		40.3.7.1.2.1.1.1-01	The requirements of Section 3.7.1.2.1.1.1 and subordinate sections shall apply to TAAS except that Graphic Weather from RWP, Conflict Resolution and MSAW Advisories, Route Display, and Flight Plan Conflict/Trial Plan Display are not required.	779
		40.3.7.1.2.1.1.2.1-00	FLIGHT DATA FIELDS	781

Task Number	Task Statement	Paragraph Number	Requirement	Page No.
A1.3.2.75 (cont'd)	DETECT ALTITUDE NONCONFORMANCE INDICATION	40.3.7.1.2.1.1.2.1-01	a. The requirements of Section 3.7 1.2.1.1.2.1 shall apply to TAAS with the following exceptions: The Next Posted Fix, CTA at Next Posted Fix, Next Sector/Next Facility, Lateral Nonconformance Indicator, Metering/Traffic Management Advisory, and Metering/Traffic Management Advisory ... (See SLS).	781
A1.3.3.1	INFORM CONTROLLER/ SUPERVISOR/ PILOT OF AIRSPACE RESTRICTION IMPOSED/ RELEASE	3.7.1.1.3.7.1-00	ATC MAIL MESSAGE PROCESSING	299
		3.7.1.1.3.7.1-01	The ACCC shall provide the capability to communicate via electronic media.	299
		40.3.7.1.1.3.7.1-00	ATC MAIL PROCESSING	776
		40.3.7.1.1.3.7.1-01	The requirements of Section 3.7.1.1.3.7.1 shall apply to TAAS.	776
A1.3.3.3	RECEIVE REQUEST FOR USE OF SPECIAL USE AIRSPACE FROM SUPERVISOR/ CONTROLLER/ PILOT	3.7.1.1.3.7.1-00	ATC MAIL MESSAGE PROCESSING	299
		3.7.1.1.3.7.1-01	The ACCC shall provide the capability to communicate via electronic media.	299
		40.3.7.1.1.3.7.1-00	ATC MAIL PROCESSING	776
		40.3.7.1.1.3.7.1-01	The requirements of Section 3.7.1.1.3.7.1 shall apply to TAAS.	776
A1.3.3.5	OBSERVE DISPLAY OF AIRSPACE RESTRICTION STATUS CHANGE	3.7.1.2.1.1.1-00	SITUATION DISPLAY	323
		3.7.1.2.1.1.1.2-00	GEOGRAPHIC MAP DATA	323
		3.7.1.2.1.1.1.2-07	When the special use airspace becomes active, or at an adapted time prior to activation, the special use airspace boundary shall automatically be displayed and emphasized.	324
		3.7.1.2.1.1.1.2-08	The activation period, altitude limits, and controlling agency associated with the special use airspace shall be displayed in or near the displayed boundary.	324
		3.7.1.2.1.1.1.2-10	The special use airspace boundary shall remain emphasized until the controller takes a manual action to deemphasize it.	324
		3.7.1.2.1.1.1.2-11	At the expiration of the activaton period or upon receipt of a deactivation message the special use airspace boundary shall continue to be presented until the controller takes a manual action to inhibit it from display.	324
		3.7.1.2.1.1.8-00	SYSTEM STATUS DATA DISPLAY	359

Task Number	Task Statement	Paragraph Number	Requirement	Page No.
A1.3.3.5 (cont'd)	OBSERVE DISPLAY OF AIRSPACE RESTRICTION STATUS CHANGE	3.7.1.2.1.1.8-02	The following data categories shall be included: Communication Channel Assignments, Radio Frequencies, Radio Equipment Outages and Repair Schedule, Radar Equipment Outages and Repair Schedule, NAVAID Outages and Repair Schedule, NAVAID Maintenance Schedule, Sectorization Plan ... (See SLS).	359
		3.7.1.2.1.1.8-04	All displayed information shall be updated automatically when changes are reported.	359
		3.7.1.2.1.1.8-05	As established through adaptation, selected items shall be emphasized to indicate that an automatic update has occurred on the display.	359
		40.3.7.1.2.1.1.1-00	SITUATION DISPLAY	779
		40.3.7.1.2.1.1.1-01	The requirements of Section 3.7.1.2.1.1.1 and subordinate sections shall apply to TAAS except that Graphic Weather from RWP, Conflict Resolution and MSAW Advisories, Route Display, and Flight Plan Conflict/Trial Plan Display are not required.	779
		40.3.7.1.2.1.1.7-00	SYSTEM STATUS DATA DISPLAY	783
		40.3.7.1.2.1.1.7-01	The requirements of Section 3.7.1.2.1.1.8 shall apply to TAAS except that the source of data shall be supervisor, area manager, controller manual entry or automatically-detected failures of TAAS resources, and that there is no requirement for additional categories defined as part of ... (See SLS).	783
A1.3.3.6	RECEIVE NOTICE OF AIRSPACE RESTRICTION/ RELEASE	3.7.1.1.3.7.1-00	ATC MAIL MESSAGE PROCESSING	299
		3.7.1.1.3.7.1-01	The ACCC shall provide the capability to communicate via electronic media.	299
		40.3.7.1.1.3.7.1-00	ATC MAIL PROCESSING	776
		40.3.7.1.1.3.7.1-01	The requirements of Section 3.7.1.1.3.7.1 shall apply to TAAS.	776
A1.3.4.1	DETERMINE DESCENT TIME OR POINT	3.7.1.2.1.1.1-00	SITUATION DISPLAY	323
		3.7.1.2.1.1.1.2-00	GEOGRAPHIC MAP DATA	323
		40.3.7.1.2.1.1.1-00	SITUATION DISPLAY	779
		40.3.7.1.2.1.1.1-01	The requirements of Section 3.7.1.2.1.1.1 and subordinate sections shall apply to TAAS except that Graphic Weather from RWP, Conflict Resolution and MSAW Advisories, Route Display, and Flight Plan Conflict/Trial Plan Display are not required.	779

Task to Requirement Traceability Matrix

Task Number	Task Statement	Paragraph Number	Requirement	Page No.
A1.3.4.1 (cont'd)	DETERMINE DESCENT TIME OR POINT	40.3.7.1.2 1.1.4-00	SPECIAL LISTS	782
A1.3.4.4	REQUEST AIRCRAFT BE REROUTED	3.7.1.1.3.7.1-00	ATC MAIL MESSAGE PROCESSING	299
		3.7.1.1.3.7.1-01	The ACCC shall provide the capability to communicate via electronic media.	299
		40.3.7.1.1.3.7.1-00	ATC MAIL PROCESSING	776
		40.3.7.1.1.3.7.1-01	The requirements of Section 3.7.1.1.3.7.1 shall apply to TAAS.	776
A1.3.4.5	PROJECT MENTALLY THE RANGE/ BEARING BETWEEN AIRCRAFT	40.3.7.1.2.1.1.1-00	SITUATION DISPLAY	779
A1.3.5.1	VALIDATE MODE C ALTITUDE	3.7.1.2.1.1.1-00	SITUATION DISPLAY	323
		3.7.1.2.1.1.1.3-00	TARGET AND TRACK DATA AND SYMBOLOGY	330
		3.7.1.2.1.1.1.3-44	The information conveyed in the track position symbol and FDB shall be adaptable from the following set of data: Callsign, Mode C Altitude or Pilot Reported Altitude and indication of Pilot Reported Altitude, Handoff Status/Indicator, Aircraft Type, Assigned Altitude or Interim ... (See SLS).	332
		40.3.7.1.2.1.1.1-00	SITUATION DISPLAY	779
		40.3.7.1.2.1.1.1-01	The requirements of Section 3.7.1.2.1.1.1 and subordinate sections shall apply to TAAS except that Graphic Weather from RWP, Conflict Resolution and MSAW Advisories, Route Display, and Flight Plan Conflict/Trial Plan Display are not required.	779
A1.3.5.2	ENTER REPORTED ALTITUDE	3.7.1.2.1.2.2-00	FLIGHT DATA CHANGES	373
		3.7.1.2.1.2.2-24	h. Reported Altitude: Flight Identification, Altitude(s), (Indicator denoting Report Reaching), (Indicator denoting Report Leaving), (Indicator denoting that reported altitude is other than assigned altitude).	375
		3.7.1.2.1.2.2-25	h. Reported Altitude: This message shall be used to enter, modify, or delete a reported altitude.	375
		3.7.1.2.1.2.2-26	h. Reported Altitude: In addition, the option shall be provided to denote that the reported altitude is a report reaching, a report leaving, or other than assigned altitude.	375
		40.3.7.1.2.1.2-00	CONTROLLER INPUT LANGUAGE PROCESSING	783

Task Number	Task Statement	Paragraph Number	Requirement	Page No.
A1.3.5.2 (cont'd)	ENTER REPORTED ALTITUDE	4Ø.3.7.1.2.1.2-Ø7	c. For Flight Data Changes (Section 3.7.1.2.1.2.2) all messages shall be processed by TAAS except Emergency Airport, Implement Reroute, Implement Absorption Maneuver, Create/Delete Route, and Repetitive Route Amendment.	784
A1.3.5.3	RECEIVE NOTICE OF MISSED APPROACH	3.7.1.2.1.1.1-ØØ	SITUATION DISPLAY	323
		3.7.1.2.1.1.1.3-ØØ	TARGET AND TRACK DATA AND SYMBOLOGY	33Ø
		3.7.1.2.1.1.1.3-44	The information conveyed in the track position symbol and FDB shall be adaptable from the following set of data: Callsign, Mode C Altitude or Pilot Reported Altitude and indication of Pilot Reported Altitude, Handoff Status/Indicator, Aircraft Type, Assigned Altitude or Interim ... (See SLS).	332
		4Ø.3.7.1.2.1.1.1-ØØ	SITUATION DISPLAY	779
		4Ø.3.7.1.2.1.1.1-Ø1	The requirements of Section 3.7.1.2.1.1.1 and subordinate sections shall apply to TAAS except that Graphic Weather from RWP, Conflict Resolution and MSAW Advisories, Route Display, and Flight Plan Conflict/Trial Plan Display are not required.	779
A1.3.6.1	OBSERVE AIRSPACE INTRUSION BY A NON-CONTROLLED OBJECT	3.7.1.2.1.1.1-ØØ	SITUATION DISPLAY	323
		3.7.1.2.1.1.1.3-ØØ	TARGET AND TRACK DATA AND SYMBOLOGY	33Ø
		4Ø.3.7.1.2.1.1.1-ØØ	SITUATION DISPLAY	779
		4Ø.3.7.1.2.1.1.1-Ø1	The requirements of Section 3.7.1.2.1.1.1 and subordinate sections shall apply to TAAS except that Graphic Weather from RWP, Conflict Resolution and MSAW Advisories, Route Display, and Flight Plan Conflict/Trial Plan Display are not required.	779
A1.3.6.2	ENTER CONTROLLER NOTE	3.7.1.2.1.1.1-ØØ	SITUATION DISPLAY	323
		3.7.1.2.1.1.1.14-ØØ	GEOGRAPHIC TAGGING	338
		3.7.1.2.1.1.1.14-Ø2	The capability shall be provided for the controller to enter a string of alphanumerics starting at any geographic point designated by the CPSD or controller entered fix.	338
		3.7.1.2.1.1.18-ØØ	CONTROLLER NOTEPAD DISPLAY	363
		3.7.1.2.1.1.18-Ø1	The logical display shall contain controller-entered free-form text notes which have no 'semantic level' meaning to the system, but rather are treated as a string of undifferentiated characters.	363

Task Number	Task Statement	Paragraph Number	Requirement	Page No.
A1 3.6.2 (cont'd)	ENTER CONTROLLER NOTE	40.3.7.1.2.1.1.1-00	SITUATION DISPLAY	779
		40.3.7.1.2.1.1.1-01	The requirements of Section 3.7.1.2.1.1.1 and subordinate sections shall apply to TAAS except that Graphic Weather from RWP, Conflict Resolution and MSAW Advisories, Route Display, and Flight Plan Conflict/Trial Plan Display are not required.	779
		40.3.7.1.2.1.1.11-00	CONTROLLER NOTEPAD DISPLAY	783
		40.3.7.1.2.1.1.11-01	The requirements of Section 3.7.1.2.1.1.18 shall apply to TAAS.	783
A1.3.6.3	FLIGHT-FOLLOW AN OBSERVED NON-CONTROLLED OBJECT	3.7.1.1.3.2.2-00	TRACK INITIATION	274
		3.7.1.1.3.2.2-05	The ACCC shall provide the capability of manually initiating a track through controller input even if the reports associated with the target to be tracked consist entirely of primary (search) reports.	274
		3.7.1.2.1.1.1-00	SITUATION DISPLAY	323
		3.7.1.2.1.1.1.3-00	TARGET AND TRACK DATA AND SYMBOLOGY	330
		3.7.1.2.1.2.1-00	TRACK CONTROL	368
		3.7.1.2.1.2.1-05	b. Track: Flight Identification, Track Action (Coast, Start, Drop, etc.), (Track Start Position), (Speed), (Heading), (Assigned Altitude).	368
		3.7.1.2.1.2.1-06	b. Track: This message shall be used to change the tracking status of an aircraft.	368
		3.7.1.2.1.2.1-07	b. Track: The Track message shall be designed to enable the controller to modify the tracking function for a particular aircraft.	368
		40.3.7.1.1.3.2-00	AUTOMATIC TRACKING CAPABILITY	769
		40.3.7.1.1.3.2-01	The requirements of Section 3.7.1.1.3.2 and subordinate sections shall apply to the TAAS with the following exceptions.	769
		40.3.7.1.2.1.1.1-00	SITUATION DISPLAY	779
		40.3.7.1.2.1.1.1-01	The requirements of Section 3.7.1.2.1.1.1 and subordinate sections shall apply to TAAS except that Graphic Weather from RWP, Conflict Resolution and MSAW Advisories, Route Display, and Flight Plan Conflict/Trial Plan Display are not required.	779
		40.3.7.1.2.1.2-00	CONTROLLER INPUT LANGUAGE PROCESSING	783

Task Number	Task Statement	Paragraph Number	Requirement	Page No.
A1.3.6.3 (cont'd)	FLIGHT-FOLLOW AN OBSERVED NON-CONTROLLED OBJECT	40.3.7.1.2.1.2-02	b. For track control messages all messages except Inhibit/Restore Automatic Pointout, Group Suppression, Vertical Velocity Readout, Flight Plan Extrapolation, Fix/Time Readout, Range/Bearing Readout, Range/Bearing/Fix Readout, Continuous Range Readout, and Radar Contact shall be processed.	783
A1.3.6.4	FORWARD NOTICE OF AIRSPACE INTRUSION BY A NON-CONTROLLED OBJECT	3.7.1.1.3.7.1-00	ATC MAIL MESSAGE PROCESSING	299
		3.7.1.1.3.7.1-01	The ACCC shall provide the capability to communicate via electronic media.	299
		40.3.7.1.1.3.7.1-00	ATC MAIL PROCESSING	776
		40.3.7.1.1.3.7.1-01	The requirements of Section 3.7.1.1.3.7.1 shall apply to TAAS.	776
A1.3.6.5	RECEIVE NOTICE OF AIRSPACE INTRUSION BY A NON-CONTROLLED OBJECT	3.7.1.1.3.7.1-00	ATC MAIL MESSAGE PROCESSING	299
		3.7.1.1.3.7.1-01	The ACCC shall provide the capability to communicate via electronic media.	299
		40.3.7.1.1.3.7.1-00	ATC MAIL PROCESSING	776
		40.3.7.1.1.3.7.1-01	The requirements of Section 3.7.1.1.3.7.1 shall apply to TAAS.	776
A1.3.7.1	RECEIVE CONTROLLER/ SUPERVISOR REQUEST FOR TEMPORARY USE OF AIRSPACE	3.7.1.1.3.7.1-00	ATC MAIL MESSAGE PROCESSING	299
		3.7.1.1.3.7.1-01	The ACCC shall provide the capability to communicate via electronic media.	299
		40.3.7.1.1.3.7.1-00	ATC MAIL PROCESSING	776
		40.3.7.1.1.3.7.1-01	The requirements of Section 3.7.1.1.3.7.1 shall apply to TAAS.	776
A1.3.7.2	FORWARD APPROVAL FOR TEMPORARY USE OF AIRSPACE	3.7.1.1.3.7.1-00	ATC MAIL MESSAGE PROCESSING	299
		3.7.1.1.3.7.1-01	The ACCC shall provide the capability to communicate via electronic media.	299
		40.3.7.1.1.3.7.1-00	ATC MAIL PROCESSING	776
		40.3.7.1.1.3.7.1-01	The requirements of Section 3.7.1.1.3.7.1 shall apply to TAAS.	776
A1.3.7.3	FORWARD DENIAL OF TEMPORARY USE OF AIRSPACE	3.7.1.1.3.7.1-00	ATC MAIL MESSAGE PROCESSING	299

Task Number	Task Statement	Paragraph Number	Requirement	Page No.
A1.3.7.3 (cont'd)	FORWARD DENIAL OF TEMPORARY USE OF AIRSPACE	3.7.1.1.3.7.1-01	The ACCC shall provide the capability to communicate via electronic media.	299
		40.3.7.1.1.3.7.1-00	ATC MAIL PROCESSING	776
		40.3.7.1.1.3.7.1-01	The requirements of Section 3.7.1.1.3.7.1 shall apply to TAAS.	776
A1.3.7.4	SUPPRESS MAP ASSOCIATED WITH TEMPORARY USE OF AIRSPACE	3.7.1.2.1.1.1-00	SITUATION DISPLAY	323
		3.7.1.2.1.1.1.2-00	GEOGRAPHIC MAP DATA	323
		3.7.1.2.1.1.1.2-02	Map data shall be divided into many categories.	324
		3.7.1.2.1.1.1.2-03	These categories shall include, but not be limited to, several groups of fixes, several groups of airways, sector boundaries grouped by altitude, special use airspace boundaries, airports, obstructions, fixes, minimum vector altitudes (MVA), military routes, holding pattern ... (See SLS).	324
		3.7.1.2.1.1.1.2-04	Each category shall be independently selectable for display by the controller.	324
		3.7.1.2.1.1.1.2-05	The controller shall be able to select/deselect a special use airspace boundary for display on an area-by-area basis.	324
		3.7.1.2.1.1.1.2-11	At the expiration of the activaton period or upon receipt of a deactivation message the special use airspace boundary shall continue to be presented until the controller takes a manual action to inhibit it from display.	324
		40.3.7.1.2.1.1.1-00	SITUATION DISPLAY	779
		40.3.7.1.2.1.1.1-01	The requirements of Section 3.7.1.2.1.1.1 and subordinate sections shall apply to TAAS except that Graphic Weather from RWP, Conflict Resolution and MSAW Advisories, Route Display, and Flight Plan Conflict/Trial Plan Display are not required.	779
A1.3.7.6	SELECT MAP DISPLAY OF ADAPTED AIRSPACE REQUESTED FOR USE BY ANOTHER CONTROLLER	3.7.1.2.1.1.1-00	SITUATION DISPLAY	323
		3.7.1.2.1.1.1.2-00	GEOGRAPHIC MAP DATA	323
		3.7.1.2.1.1.1.2-01	The Situation Display shall contain geographic map data set in adaptation.	323
		3.7.1.2.1.1.1.2-02	Map data shall be divided into many categories.	324

Task Number	Task Statement	Paragraph Number	Requirement	Page No.
A1.3.7.6 (cont'd)	SELECT MAP DISPLAY OF ADAPTED AIRSPACE REQUESTED FOR USE BY ANOTHER CONTROLLER	3.7.1.2.1.1.1.2-03	These categories shall include, but not be limited to, several groups of fixes, several groups of airways, sector boundaries grouped by altitude, special use airspace boundaries, airports, obstructions, fixes, minimum vector altitudes (MVA), military routes, holding pattern ... (See SLS).	324
		3.7.1.2.1.1.1.2-04	Each category shall be independently selectable for display by the controller.	324
		3.7.1.2.1.1.1.2-06	The controller shall be able to select/deselect a special use airspace boundary for display on an area-by-area basis.	324
		40.3.7.1.2.1.1.1-00	SITUATION DISPLAY	779
		40.3.7.1.2.1.1.1-01	The requirements of Section 3.7.1.2.1.1.1 and subordinate sections shall apply to TAAS except that Graphic Weather from RWP, Conflict Resolution and MSAW Advisories, Route Display, and Flight Plan Conflict/Trial Plan Display are not required.	779
A1.3.7.7	EVALUATE FEASIBILITY OF RELEASING AIRSPACE TEMPORARILY	3.7.1.2.1.1.1-00	SITUATION DISPLAY	323
		3.7.1.2.1.1.1.3-00	TARGET AND TRACK DATA AND SYMBOLOGY	330
		3.7.1.2.1.1.1.3-44	The information conveyed in the ta[illegible] position symbol and FDB shall be ob[illegible] from the following set of data: Co[illegible], Mode C Altitude or Pilot Reported A[illegible] and indication of Pilot Reported Altitude, Handoff Status/Indicator, Aircraft Type, Assigned Altitude or Interim ... (See SLS).	332
		40.3.7.1.2.1.1.1-00	SITUATION DISPLAY	779
		40.3.7.1.2.1.1.1-01	The requirements of Section 3.7.1.2.1.1.1 and subordinate sections shall apply to TAAS except that Graphic Weather from RWP, Conflict Resolution and MSAW Advisories, Route Display, and Flight Plan Conflict/Trial Plan Display are not required.	779
		40.3.7.1.2.1.1.2-00	FLIGHT DATA DISPLAY	779
		40.3.7.1.2.1.1.2-01	This logical display shall contain flight information for aircraft under the control of the sector, those not yet under the control of the sector, and those of interest to the sector.	779
A1.3.7.8	RECEIVE NOTIFICATION OF RETURN OF RELEASED AIRSPACE	3.7.1.1.3.7.1-00	ATC MAIL MESSAGE PROCESSING	299
		3.7.1.1.3.7.1-01	The ACCC shall provide the capability to communicate via electronic media.	299

Task to Requirement Traceability Matrix

Task Number	Task Statement	Paragraph Number	Requirement	Page No.
A1.3.7.8 (cont'd)	RECEIVE NOTIFICATION OF RETURN OF RELEASED AIRSPACE	40.3.7.1.1.3.7.1-00	ATC MAIL PROCESSING	776
		40.3.7.1.1.3.7.1-01	The requirements of Section 3.7.1.1.3.7.1 shall apply to TAAS.	776
A1.3.8.1	REQUEST TEMPORARY USE OF AIRSPACE	3.7.1.1.3.7.1-00	ATC MAIL MESSAGE PROCESSING	299
		3.7.1.1.3.7.1-01	The ACCC shall provide the capability to communicate via electronic media.	299
		40.3.7.1.1.3.7.1-00	ATC MAIL PROCESSING	776
		40.3.7.1.1.3.7.1-01	The requirements of Section 3.7.1.1.3.7.1 shall apply to TAAS.	776
A1.3.8.2	RECEIVE RELEASE/ USE OF AIRSPACE	3.7.1.1.3.7.1-00	ATC MAIL MESSAGE PROCESSING	299
		3.7.1.1.3.7.1-01	The ACCC shall provide the capability to communicate via electronic media.	299
		40.3.7.1.1.3.7.1-00	ATC MAIL PROCESSING	776
		40.3.7.1.1.3.7.1-01	The requirements of Section 3.7.1.1.3.7.1 shall apply to TAAS.	776
A1.3.8.3	RECEIVE REJECTION OF USE OF AIRSPACE	3.7.1.1.3.7.1-00	ATC MAIL MESSAGE PROCESSING	299
		3.7.1.1.3.7.1-01	The ACCC shall provide the capability to communicate via electronic media.	299
		40.3.7.1.1.3.7.1-00	ATC MAIL PROCESSING	776
		40.3.7.1.1.3.7.1-01	The requirements of Section 3.7.1.1.3.7.1 shall apply to TAAS.	776
A1.3.8.4	FORWARD NOTICE OF RETURN OF RELEASED AIRSPACE	3.7.1.1.3.7.1-00	ATC MAIL MESSAGE PROCESSING	299
		3.7.1.1.3.7.1-01	The ACCC shall provide the capability to communicate via electronic media.	299
		40.3.7.1.1.3.7.1-00	ATC MAIL PROCESSING	776
		40.3.7.1.1.3.7.1-01	The requirements of Section 3.7.1.1.3.7.1 shall apply to TAAS.	776
A1.4.1.1	RECEIVE CONTROLLER NOTICE ON REQUESTED CLEARANCE OF AIRCRAFT LEAVING HIS SECTOR	3.7.1.1.3.7.1-00	ATC MAIL MESSAGE PROCESSING	299
		3.7.1.1.3.7.1-01	The ACCC shall provide the capability to communicate via electronic media.	299

Task Number	Task Statement	Paragraph Number	Requirement	Page No.
A1.4.1.1 (cont'd)	RECEIVE CONTROLLER NOTICE ON REQUESTED CLEARANCE OF AIRCRAFT LEAVING HIS SECTOR	40.3.7.1.1.3.7.1-00	ATC MAIL PROCESSING	776
		40.3 7.1.1.3.7.1-01	The requirements of Section 3.7.1.1.3.7.1 shall apply to TAAS.	776
A1.4.1.2	RECEIVE CLEARANCE REQUEST FROM AICT/ FSS/ PILOT/ SUPERVISOR	3.7.1.1.3.7.1-00	ATC MAIL MESSAGE PROCESSING	299
		3.7.1.1.3.7.1-01	The ACCC shall provide the capability to communicate via electronic media.	299
		40.3.7.1.1.3.7.1-00	ATC MAIL PROCESSING	776
		40.3.7.1.1.3.7.1-01	The requirements of Section 3.7.1.1.3.7.1 shall apply to TAAS.	776
A1.4.1.3	RECEIVE CONTROLLER REQUEST FOR CLEARANCE/ APPROVAL	3.7.1.1.3.7.1-00	ATC MAIL MESSAGE PROCESSING	299
		3.7.1.1.3.7.1-01	The ACCC shall provide the capability to communicate via electronic media.	299
		40.3.7.1.1.3.7.1-00	ATC MAIL PROCESSING	776
		40.3.7.1.1.3.7.1-01	The requirements of Section 3.7.1.1.3.7.1 shall apply to TAAS.	776
A1.4.1.4	FORWARD CLEARANCE REQUEST TO ANOTHER CONTROLLER	3.7.1.1.3.7.1-00	ATC MAIL MESSAGE PROCESSING	299
		3.7.1.1.3.7.1-01	The ACCC shall provide the capability to communicate via electronic media.	299
		40.3.7.1.1.3.7.1-00	ATC MAIL PROCESSING	776
		40.3.7.1.1.3.7.1-01	The requirements of Section 3.7.1.1.3.7.1 shall apply to TAAS.	776
A1.4.1.5	REQUEST CLEARANCE/ APPROVAL FROM ANOTHER CONTROLLER	3.7.1.1.3.7.1-00	ATC MAIL MESSAGE PROCESSING	299
		3.7.1.1.3.7.1-01	The ACCC shall provide the capability to communicate via electronic media.	299
		40.3.7.1.1.3.7.1-00	ATC MAIL PROCESSING	776
		40.3.7.1.1.3.7.1-01	The requirements of Section 3.7.1.1.3.7.1 shall apply to TAAS.	776
A1.4.1.6	RECEIVE CLEARANCE APPROVAL/ CLEARANCE RESTRICTIONS FROM ANOTHER CONTROLLER	3.7.1.1.3.7.1-00	ATC MAIL MESSAGE PROCESSING	299
		3.7.1.1.3.7.1-01	The ACCC shall provide the capability to communicate via electronic media.	299

Task to Requirement Traceability Matrix

Task Number	Task Statement	Paragraph Number	Requirement	Page No.
A1.4.1.6 (cont'd)	RECEIVE CLEARANCE APPROVAL/ CLEARANCE RESTRICTIONS FROM ANOTHER CONTROLLER	40.3.7.1.1.3.7.1-00	ATC MAIL PROCESSING	776
		40.3.7.1.1.3.7.1-01	The requirements of Section 3.7.1.1.3.7.1 shall apply to TAAS.	776
A1.4.1.7	RECEIVE CLEARANCE DISAPPROVAL/ DENIAL FROM ANOTHER CONTROLLER	3.7.1.1.3.7.1-00	ATC MAIL MESSAGE PROCESSING	299
		3.7.1.1.3.7.1-01	The ACCC shall provide the capability to communicate via electronic media.	299
		40.3.7.1.1.3.7.1-00	ATC MAIL PROCESSING	776
		40.3.7.1.1.3.7.1-01	The requirements of Section 3.7.1.1.3.7.1 shall apply to TAAS.	776
A1.4.1.8	RECEIVE ALTERNATE SUGGESTION FOR CLEARANCE/ APPROVAL REQUESTED OF ANOTHER CONTROLLER	3.7.1.1.3.7.1-00	ATC MAIL MESSAGE PROCESSING	299
		3.7.1.1.3.7.1-01	The ACCC shall provide the capability to communicate via electronic media.	299
		40.3.7.1.1.3.7.1-00	ATC MAIL PROCESSING	776
		40.3.7.1.1.3.7.1-01	The requirements of Section 3.7.1.1.3.7.1 shall apply to TAAS.	776
A1.4.1.10	REVIEW POTENTIAL IMPEDIMENTS FOR IMPACT ON PROPOSED CLEARANCE	3.7.1.1.3.1.4-00	PROCESSING OF WEATHER MAP MESSAGES	273
		3.7.1.1.3.1.4-01	The system shall provide the capability of extracting weather map messages that are received from ATC radars and associated equipment.	273
		3.7.1.1.3.1.4-02	This shall include data from the Weather Fixed Map Unit (WFMU) of long range radars, ARSR-3s and ARSR-4s, and the weather channel in the ASR-9 or an equivalent primary radar sensor.	273
		3.7.1.2.1.1.1-00	SITUATION DISPLAY	323
		3.7.1.2.1.1.1.2-00	GEOGRAPHIC MAP DATA	323
		3.7.1.2.1.1.1.3-00	TARGET AND TRACK DATA AND SYMBOLOGY	336
		3.7.1.2.1.1.1.7-00	GRAPHIC WEATHER FROM ATC RADARS	337
		3.7.1.2.1.1.1.7-01	The Situation Display shall, at the controller's option, display graphic weather constructed from data obtained from Air Traffic Control radars.	337

Task Number	Task Statement	Paragraph Number	Requirement	Page No.
A1.4.1.10 (cont'd)	REVIEW POTENTIAL IMPEDIMENTS FOR IMPACT ON PROPOSED CLEARANCE	40.3.7.1.1.3.1-00	SURVEILLANCE DATA PROCESSING CAPABILITY	769
		40.3.7.1.1.3.1-01	The requirements of Section 3.7.1.1.3.1 and subordinate sections shall apply to the TAAS with the following exceptions:	769
		40.3.7.1.2.1.1.1-00	SITUATION DISPLAY	779
		40.3.7.1.2.1.1.1-01	The requirements of Section 3.7.1.2.1.1.1 and subordinate sections shall apply to TAAS except that Graphic Weather from RWP, Conflict Resolution and MSAW Advisories, Route Display, and Flight Plan Conflict/Trial Plan Display are not required.	779
		40.3.7.1.2.1.1.2-00	FLIGHT DATA DISPLAY	779
		40.3.7.1.2.1.1.4-00	SPECIAL LISTS	782
A1.4.1.13	EVALUATE FDE CHANGES FOR CLEARANCE PLANNING OR FUTURE ACTIONS	40.3.7.1.2.1.1.2-00	FLIGHT DATA DISPLAY	779
		40.3.7.1.2.1.1.2-20	c. Updating - Flight Data fields shall be updated by the system because of direct modifications of the flight data fields or system processing of flight changes.	780
		40.3.7.1.2.1.1.2-22	c. Updating - Option 1 shall provide automatic update of information in the FDE with emphasis of the new data.	780
		40.3.7.1.2.1.1.2-23	c. Updating - Automatic update shall consist of the existing data being replaced by the new data.	780
		40.3.7.1.2.1.1.2-25	c. Updating - Option 2 shall provide for the automatic update in the FDE with emphasis of the new data and shall require controller acknowledgment to delete the emphasis.	780
		40.3.7.1.2.1.1.2-26	c. Updating - Option 3 shall provide new data to be displayed and emphasized in the Flight Data Area on the Flight Data Display and shall require controller acknowledgment.	780
		40.3.7.1.2.1.1.2-27	c. Updating - The data in this area shall include the flight identification, field identifier, and the new data.	780
A1.4.1.15	PERCEIVE NEED FOR AMENDED CLEARANCE	3.7.1.2.1.1.1-00	SITUATION DISPLAY	323
		3.7.1.2.1.1.3-00	TARGET AND TRACK DATA AND SYMBOLOGY	330

Task to Requirement Traceability Matrix

Task Number	Task Statement	Paragraph Number	Requirement	Page No.
A1.4.1.15 (cont'd)	PERCEIVE NEED FOR AMENDED CLEARANCE	3.7.1.2.1.1.1.3-44	The information conveyed in the track position symbol and FDB shall be adaptable from the following set of data: Callsign, Mode C Altitude or Pilot Reported Altitude and indication of Pilot Reported Altitude, Handoff Status/Indicator, Aircraft Type, Assigned Altitude or Interim ... (See SLS).	332
		3.7.1.2.1.1.2.1-00	FLIGHT DATA FIELDS	341
		3.7.1.2.1.1.2.1-03	Table 3.7-1 lists the Flight Plan Data fields with the maximum number of characters in the field. (See SLS).	341
		40.3.7.1.2.1.1.1-00	SITUATION DISPLAY	779
		40.3.7.1.2.1.1.1-01	The requirements of Section 3.7.1.2.1.1.1 and subordinate sections shall apply to TAAS except that Graphic Weather from RWP, Conflict Resolution and MSAW Advisories, Route Display, and Flight Plan Conflict/Trial Plan Display are not required.	779
		40.3.7.1.2.1.1.2.1-00	FLIGHT DATA FIELDS	781
		40.3.7.1.2.1.1.2.1-01	a. The requirements of Section 3.7.1.2.1.1.2.1 shall apply to TAAS with the following exceptions: The Next Posted Fix, CTA at Next Posted Fix, Next Sector/Next Facility, Lateral Nonconformance Indicator, Metering/Traffic Management Advisory, and Metering/Traffic Management Advisory ... (See SLS).	781
A1.4.2.1	DECLARE EMERGENCY AND INVOKE CONTINGENCY PLAN	3.7.1.1.3.7.1-00	ATC MAIL MESSAGE PROCESSING	299
		3.7.1.1.3.7.1-01	The ACCC shall provide the capability to communicate via electronic media.	299
		40.3.7.1.1.3.7.1-00	ATC MAIL PROCESSING	776
		40.3.7.1.1.3.7.1-01	The requirements of Section 3.7.1.1.3.7.1 shall apply to TAAS.	776
A1.4.2.2	RECEIVE NOTICE OF PILOT OR AIRCRAFT HAVING A PROBLEM (E.G., OVERDUE, LOSS OF RADIO CONTACT)	3.7.1.1.3.7.1-00	ATC MAIL MESSAGE PROCESSING	299
		3.7.1.1.3.7.1-01	The ACCC shall provide the capability to communicate via electronic media.	299
		40.3.7.1.1.3.7.1-00	ATC MAIL PROCESSING	776
		40.3.7.1.1.3.7.1-01	The requirements of Section 3.7.1.1.3.7.1 shall apply to TAAS.	776
A1.4.2.4	DETECT A PILOT OR AIRCRAFT PROBLEM (E.G., HYPOXIA, EXCEPTION BEACON CODE)	3.7.1.2.1.1.1-00	SITUATION DISPLAY	323

Task Number	Task Statement	Paragraph Number	Requirement	Page No.
A1.4.2.4 (cont'd)	DETECT A PILOT OR AIRCRAFT PROBLEM (E.G., HYPOXIA, EXCEPTION BEACON CODE)	3.7.1.2.1.1.1.3-00	TARGET AND TRACK DATA AND SYMBOLOGY	330
		3.7.1.2.1.1.1.3-44	The information conveyed in the track position symbol and FDB shall be adaptable from the following set of data: Callsign, Mode C Altitude or Pilot Reported Altitude and indication of Pilot Reported Altitude, Handoff Status/Indicator, Aircraft Type, Assigned Altitude or Interim ... (See SLS).	332
		3.7.1.2.1.1.1.3-47	bc. Exception beacon code shall denote when a track's reported beacon code/Mode S address differs from its assigned beacon code/Mode S address.	333
		3.7.1.2.1.1.1.3-57	ca. The following emergency and alert conditions shall be coded in the FDB. Beacon Code 7700 (Emergency), 7600 (Radio Failure), and adaptable codes for Hijack, Suspect Aircraft, and other possible uses.	334
		40.3.7.1.2.1.1.1-00	SITUATION DISPLAY	779
		40.3.7.1.2.1.1.1-01	The requirements of Section 3.7.1.2.1.1.1 and subordinate sections shall apply to TAAS except that Graphic Weather from RWP, Conflict Resolution and MSAW Advisories, Route Display, and Flight Plan Conflict/Trial Plan Display are not required.	779
A1.4.2.5	FORWARD CONTINGENCY INFORMATION TO SUPERVISOR/ ANOTHER CONTROLLER	3.7.1.1.3.7.1-00	ATC MAIL MESSAGE PROCESSING	299
		3.7.1.1.3.7.1-01	The ACCC shall provide the capability to communicate via electronic media.	299
		3.7.1.2.1.2.2-00	FLIGHT DATA CHANGES	375
		3.7.1.2.1.2.2-03	a. Flight Data Amendment: Flight Identification, Field to be Modified, New Data.	373
		3.7.1.2.1.2.2-04	a. Flight Data Amendment: This message shall be used to modify, add to, or delete previously entered flight data for any flight plan.	373
		3.7.1.2.1.2.2-07	a. Flight Data Amendment: The flight data fields that can be amended are listed in Table 3.7-1. (See SLS).	373
		40.3.7.1.1.3.7.1-00	ATC MAIL PROCESSING	776
		40.3.7.1.1.3.7.1-01	The requirements of Section 3.7.1.1.3.7.1 shall apply to TAAS.	776
		40.3.7.1.2.1.2-00	CONTROLLER INPUT LANGUAGE PROCESSING	783

Task Number	Task Statement	Paragraph Number	Requirement	Page No.
A1 4.2.5 (cont'd)	FORWARD CONTINGENCY INFORMATION TO SUPERVISOR/ ANOTHER CONTROLLER	40.3.7.1.2.1.2-07	c. For Flight Data Changes (Section 3.7.1.2.1.2.2) all messages shall be processed by TAAS except Emergency Airport, Implement Reroute, Implement Absorption Maneuver, Create/Delete Route, and Repetitive Route Amendment.	784
A1.4.2.6	INFORM DESIGNATED PERSONNEL OF AIRCRAFT HAVING FLIGHT PROBLEMS	3.7.1.1.3.7.1-00	ATC MAIL MESSAGE PROCESSING	299
		3.7.1.1.3.7.1-01	The ACCC shall provide the capability to communicate via electronic media.	299
		40.3.7.1.1.3.7.1-00	ATC MAIL PROCESSING	776
		40.3.7.1.1.3.7.1-01	The requirements of Section 3.7.1.1.3.7.1 shall apply to TAAS.	776
A1.4.2.7	REQUEST RELAY OF INSTRUCTIONS TO PILOT (NORDO) FOR IDENTIFICATION TURN/ TRANSPONDER RESPONSE	3.7.1.1.3.7.1-00	ATC MAIL MESSAGE PROCESSING	299
		3.7.1.1.3.7.1-01	The ACCC shall provide the capability to communicate via electronic media.	299
		40.3.7.1.1.3.7.1-00	ATC MAIL PROCESSING	776
		40.3.7.1.1.3.7.1-01	The requirements of Section 3.7.1.1.3.7.1 shall apply to TAAS.	776
A1.4.2.8	CONDUCT SEARCH FOR AIRCRAFT WITHOUT RADIO CONTACT	3.7.1.1.3.7.1-00	ATC MAIL MESSAGE PROCESSING	299
		3.7.1.1.3.7.1-01	The ACCC shall provide the capability to communicate via electronic media.	299
		40.3.7.1.1.3.7.1-00	ATC MAIL PROCESSING	776
		40.3.7.1.1.3.7.1-01	The requirements of Section 3.7.1.1.3.7.1 shall apply to TAAS.	776
A1.4.2.9	OBSERVE AIRCRAFT TURN/ TRANSPONDER RESPONSE FOLLOWING IDENTIFICATION REQUEST	3.7.1.2.1.1.1-00	SITUATION DISPLAY	323
		3.7.1.2.1.1.1.3-00	TARGET AND TRACK DATA AND SYMBOLOGY	330
		3.7.1.2.1.1.1.3-17	The controller shall be able to select and deselect the display of each category of target or track data and up to five previous positions of history data.	331
		3.7.1.2.1.1.1.3-26	b. The ident indicator shall be coded within the target position symbol.	331

Task Number	Task Statement	Paragraph Number	Requirement	Page No.
A1.4.2.9 (cont'd)	OBSERVE AIRCRAFT TURN/ TRANSPONDER RESPONSE FOLLOWING IDENTIFICATION REQUEST	3.7.1.2.1.1.1.3-44	The information conveyed in the track position symbol and FDB shall be adaptable from the following set of data: Callsign, Mode C Altitude or Pilot Reported Altitude and indication of Pilot Reported Altitude, Handoff Status/Indicator, Aircraft Type, Assigned Altitude or Interim ... (See SLS).	332
		3.7.1.2.1.1.1.3-86	Movement of the displayed data block shall be minimal on a scan-to-scan basis.	335
		40.3.7.1.2.1.1.1-00	SITUATION DISPLAY	779
		40.3.7.1.2.1.1.1-01	The requirements of Section 3.7.1.2.1.1.1 and subordinate sections shall apply to TAAS except that Graphic Weather from RWP, Conflict Resolution and MSAW Advisories, Route Display, and Flight Plan Conflict/Trial Plan Display are not required.	779
A1.4.2.10	CONDUCT RADIO/ RADAR SEARCH FOR OVERDUE AIRCRAFT	3.7.1.1.3.7.1-00	ATC MAIL MESSAGE PROCESSING	299
		3.7.1.1.3.7.1-01	The ACCC shall provide the capability to communicate via electronic media.	299
		3.7.1.2.1.1.1-00	SITUATION DISPLAY	323
		3.7.1.2.1.1.1.3-00	TARGET AND TRAC DATA AND SYMBOLOGY	330
		3.7.1.2 1.1.1.3-44	The information conveyed in the track position symbol and FDB shall be adaptable from the following set of data: Callsign, Mode C Altitude or Pilot Reported Altitude and indication of Pilot Reported Altitude, Handoff Status/Indicator, Aircraft Type, Assigned Altitude or Interim ... (See SLS).	332
		40.3.7.1.1.3.7.1-00	ATC MAIL PROCESSING	776
		40.3.7.1.1.3.7.1-01	The requirements of Section 3.7.1.1.3.7.1 shall apply to TAAS.	776
		40.3.7.1.2.1.1.1-00	SITUATION DISPLAY	779
		40.3.7.1.2.1.1.1-01	The requirements of Section 3.7.1.2.1.1.1 and subordinate sections shall apply to TAAS except that Graphic Weather from RWP, Conflict Resolution and MSAW Advisories, Route Display, and Flight Plan Conflict/Trial Plan Display are not required.	779
A1.4.2.11	RECEIVE SUPERVISOR NOTICE OF EMERGENCY DECLARED AND CONTINGENCY PLAN INVOKED	3.7.1.1.3.7.1-00	ATC MAIL MESSAGE PROCESSING	299
		3.7.1.1.3.7.1-01	The ACCC shall provide the capability to communicate via electronic media.	299
		40.3.7.1.1.3.7.1-00	ATC MAIL PROCESSING	776

Task Number	Task Statement	Paragraph Number	Requirement	Page No.
A1.4.2.11 (cont'd)	RECEIVE SUPERVISOR NOTICE OF EMERGENCY DECLARED AND CONTINGENCY PLAN INVOKED	40.3.7.1.1.3.7.1-01	The requirements of Section 3.7.1.1.3.7.1 shall apply to TAAS.	776
A1.4.2.12	RECEIVE SUPERVISOR NOTICE TO CONDUCT COMMUNICATIONS SEARCH FOR OVERDUE/ NORDO AIRCRAFT	3.7.1.1.3.7.1-00	ATC MAIL MESSAGE PROCESSING	299
		3.7.1.1.3.7.1-01	The ACCC shall provide the capability to communicate via electronic media.	299
		40.3.7.1.1.3.7.1-00	ATC MAIL PROCESSING	776
		40.3.7.1.1.3.7.1-01	The requirements of Section 3.7.1.1.3.7.1 shall apply to TAAS.	776
A1.4.2.13	RECEIVE NOTICE THAT SUPERVISOR WILL CONDUCT COMMUNICATIONS SEARCH FOR OVERDUE/ NORDO AIRCRAFT	3.7.1.1.3.7.1-00	ATC MAIL MESSAGE PROCESSING	299
		3.7.1.1.3.7.1-01	The ACCC shall provide the capability to communicate via electronic media.	299
		40.3.7.1.1.3.7.1-00	ATC MAIL PROCESSING	776
		40.3.7.1.1.3.7.1-01	The requirements of Section 3.7.1.1.3.7.1 shall apply to TAAS.	776
A1.4.2.14	RECEIVE PILOT NOTICE OF EMERGENCY DECLARED	3.7.1.2.1.1.1-00	SITUATION DISPLAY	323
		3.7.1.2.1.1.1.3-00	TARGET AND TRACK DATA AND SYMBOLOGY	330
		3.7.1.2.1.1.1.3-57	ca. The following emergency and alert conditions shall be coded in the FDB: Beacon Code 7700 (Emergency), 7600 (Radio Failure), and adaptable codes for Hijack, Suspect Aircraft, and other possible uses.	334
		40.3.7.1.2.1.1.1-00	SITUATION DISPLAY	779
		40.3.7.1.2.1.1.1-01	The requirements of Section 3.7.1.2.1.1.1 and subordinate sections shall apply to TAAS except that Graphic Weather from RWP, Conflict Resolution and MSAW Advisories, Route Display, and Flight Plan Conflict/Trial Plan Display are not required.	779
A1.4.3.1	PERCEIVE PRESENCE OF SPECIAL OPERATION	3.7.1.2.1.1.1-00	SITUATION DISPLAY	323
		3.7.1.2.1.1.1.3-00	TARGET AND TRACK DATA AND SYMBOLOGY	330

Task to Requirement Traceability Matrix

Task Number	Task Statement	Paragraph Number	Requirement	Page No.
A1.4.3.1 (cont'd)	PERCEIVE PRESENCE OF SPECIAL OPERATION	3.7.1.2.1.1.1.3-44	The information conveyed in the track position symbol and FDB shall be adaptable from the following set of data: Callsign, Mode C Altitude or Pilot Reported Altitude and indication of Pilot Reported Altitude, Handoff Status/Indicator, Aircraft Type, Assigned Altitude or Interim ... (See SLS).	332
		3.7.1.2.1.1.2.1-00	FLIGHT DATA FIELDS	341
		3.7.1.2.1.1.2.1-03	Table 3.7-1 lists the Flight Plan Data fields with the maximum number of characters in the field. (See SLS).	341
		3.7.1.2.1.1.8-00	SYSTEM STATUS DATA DISPLAY	359
		3.7.1.2.1.1.8-02	The following data categories shall be included: Communication Channel Assignments, Radio Frequencies, Radio Equipment Outages and Repair Schedule, Radar Equipment Outages and Repair Schedule, NAVAID Outages and Repair Schedule, NAVAID Maintenance Schedule, Sectorization Plan ... (See SLS).	359
		40.3.7.1.2.1.1.1-00	SITUATION DISPLAY	779
		40.3.7.1.2.1.1.1-01	The requirements of Section 3.7.1.2.1.1.1 and subordinate sections shall apply to TAAS except that Graphic Weather from RWP, Conflict Resolution and MSAW Advisories, Route Display, and Flight Plan Conflict/Trial Plan Display are not required.	779
		40.3.7.1.2.1.1.2.1-00	FLIGHT DATA FIELDS	781
		40.3.7.1.2.1.1.2.1-01	a. The requirements of Section 3.7.1.2.1.1.2.1 shall apply to TAAS with the following exceptions: The Next Posted Fix, CTA at Next Posted Fix, Next Sector/Next Facility, Lateral Nonconformance Indicator, Metering/Traffic Management Advisory, and Metering/Traffic Management Advisory ... (See SLS).	781
		40.3.7.1.2.1.1.7-00	SYSTEM STATUS DATA DISPLAY	783
		40.3.7.1.2.1.1.7-01	The requirements of Section 3.7.1.2.1.1.8 shall apply to TAAS except that the source of data shall be supervisor, area manager, controller manual entry or automatically-detected failures of TAAS resources, and that there is no requirement for additional categories defined as part of ... (See SLS).	783
A1.4.3.2	RECEIVE REVIEW/ NOTICE OF SPECIAL OPERATION	3.7.1.1.3.7.1-00	ATC MAIL MESSAGE PROCESSING	299
		3.7.1.1.3.7.1-01	The ACCC shall provide the capability to communicate via electronic media.	299
		40.3.7.1.1.3.7.1-00	ATC MAIL PROCESSING	776

Task to Requirement Traceability Matrix

Task Number	Task Statement	Paragraph Number	Requirement	Page No.
A1.4.3.2 (cont'd)	RECEIVE REVIEW/ NOTICE OF SPECIAL OPERATION	40.3.7.1.1.3.7.1-01	The requirements of Section 3.7.1.1.3.7.1 shall apply to TAAS.	776
A1.4.3.3	FORWARD NOTICE OF SPECIAL OPERATIONS TO ANOTHER CONTROLLER/ SUPERVISOR	3.7.1.1.3.7.1-00	ATC MAIL MESSAGE PROCESSING	299
		3.7.1.1.3.7.1-01	The ACUC shall provide the capability to communicate via electronic media.	299
		40.3.7.1.1.3.7.1-00	ATC MAIL PROCESSING	776
		40.3.7.1.1.3.7.1-01	The requirements of Section 3.7.1.1.3.7.1 shall apply to TAAS.	776
A1.4.4.1	OBSERVE NEW FLIGHT PLAN POSTING	40.3.7.1.2.1.1.2-00	FLIGHT DATA DISPLAY	779
		40.3.7.1.2.1.1.2-01	This logical display shall contain flight information for aircraft under the control of the sector, those not yet under the control of the sector, and those of interest to the sector.	779
		40.3.7.1.2.1.1.2-10	a. Posting - The controller shall be able to choose to operate the sector in automatic post mode in which FDEs are displayed in the Flight Data Area automatically or to operate the sector in manual acknowledgement mode in which FDEs are automatically posted and emphasized in the Flight Data Area.	780
		40.3.7.1.2.1.1.2-11	a. Posting - The FDE shall remain emphasized until an acknowledgment is made by the controller or until the manual acknowledgement mode is cancelled.	780
		40.3.7.1.2.1.1.2-42	FDEs shall be emphasized, if the manual acknowledge mode for automatically posting FDEs is selected.	781
A1.4.4.2	REVIEW FLIGHT PLAN FOR COMPLETENESS	3.7.1.2.1.1.2.1-00	FLIGHT DATA FIELDS	341
		3.7.1.2.1.1.2.1-03	Table 3.7-1 lists the Flight Plan Data fields with the maximum number of characters in the field. (See SLS).	341
		40.3.7.1.2.1.1.2-00	FLIGHT DATA DISPLAY	779
		40.3.7.1.2.1.1.2-01	This logical display shall contain flight information for aircraft under the control of the sector, those not yet under the control of the sector, and those of interest to the sector.	779
		40.3.7.1.2.1.1.2.1-00	FLIGHT DATA FIELDS	781

Task Number	Task Statement	Paragraph Number	Requirement	Page No.
A1.4.4.2 (cont'd)	REVIEW FLIGHT PLAN FOR COMPLETENESS	40.3.7.1.2.1.1.2.1-01	a. The requirements of Section 3.7.1.2.1.1.2.1 shall apply to TAAS with the following exceptions: The Next Posted Fix, CTA at Next Posted Fix, Next Sector/Next Facility, Lateral Nonconformance Indicator, Metering/Traffic Management Advisory, and Metering/Traffic Management Advisory ... (See SLS).	781
A1.4.4.3	ENTER FLIGHT PLAN	3.7.1.2.1.2.2-00	FLIGHT DATA CHANGES	373
		3.7.1.2.1.2.2-15	e. Flight Plan: Callsign, (Flight Rules), (Type of Flight), (Number of Aircraft), Type of Aircraft, (Model Number), (Heavy Jet Indicator), Equipment, Departure Point, Departure Time, Coordination Fix, Coordination Time/Elapsed Time to Coordinate Fix, True Air Speed, Altitude, Route, ... (See SLS).	374
		3.7.1.2.1.2.2-16	e. Flight Plan: This message shall be used to enter flight plan data into the system for a flight.	374
		3.7.1.2.1.2.2-17	e. Flight Plan: Either the Departure Point and Departure Time or the Coordination Fix and Coordination Time/Elapsed Time to Coordination Fix shall be included.	374
		40.3.7.1.2.1.2-00	CONTROLLER INPUT LANGUAGE PROCESSING	783
		40.3.7.1.2.1.2-07	c. For Flight Data Changes (Section 3.7.1.2.1.2.2) all messages shall be processed by TAAS except Emergency Airport, Implement Reroute, Implement Absorption Maneuver, Create/Delete Route, and Repetitive Route Amendment.	784
		40.3.7.1.2.1.2-10	c. The capability shall also be provided for the controller to enter a new IFR flight plan for use only within the facility.	784
		40.3.7.1.2.1.2-11	c. The new flight plan shall contain the aircraft ID, aircraft data (optional), assigned beacon code (optional), speed (optional), entry/departure point (optional), exit/arrival point (optional), estimated time of entry or departure (optional), assigned or requested altitude ... (See SLS).	784
A1.4.4.4	ACKNOWLEDGE NEW FLIGHT PLAN RECEIPT	40.3.7.1.2.1.1.2-00	FLIGHT DATA DISPLAY	779
		40.3.7.1.2.1.1.2-10	a. Posting - The controller shall be able to choose to operate the sector in automatic post mode in which FDEs are displayed in the Flight Data Area automatically or to operate the sector in manual acknowledgement mode in which FDEs are automatically posted and emphasized in the Flight Data Area.	780
		40.3.7.1.2.1.1.2-11	a. Posting - The FDE shall remain emphasized until an acknowledgment is made by the controller or until the manual acknowledgment mode is cancelled.	780

Task to Requirement Traceability Matrix

Task Number	Task Statement	Paragraph Number	Requirement	Page No.
A1.4.4.4 (cont'd)	ACKNOWLEDGE NEW FLIGHT PLAN RECEIPT	40.3.7.1.2.1.1.2-42	FDEs shall be emphasized, if the manual acknowledge mode for automatically posting FDEs is selected.	781
A1.4.4.5	REVIEW FLIGHT PLAN FOR ERRORS/ DATA LIST SEQUENCE	40.3.7.1.2.1.1.2-00	FLIGHT DATA DISPLAY	779
		40.3.7.1.2.1.1.2-08	a. Posting - The capability shall be provided to display the different types of FDEs in separate lists.	779
		40.3.7.1.2.1.1.2-09	a. Posting - This organization of FDEs shall be provided at the option of the controller.	780
		40.3.7.1.2.1.1.2-19	b. Ordering - In manual ordering, the controller shall have the capability to put a new FDE in the appropriate place in a list and to move FDEs with respect to one another.	780
		40.3.7.1.2.1.1.2-34	f. Formatting - The controller shall be able to select a format for all FDEs, a different format for all FDEs in each separate posting list, and/or a different format for a particular FDE from the formats available at his position.	781
A1.4.4.9	QUERY THE RELAYER OF A FLIGHT PLAN	3.7.1.1.3.7.1-00	ATC MAIL MESSAGE PROCESSING	299
		3.7.1.1.3.7.1-01	The ACCC shall provide the capability to communicate via electronic media.	299
		40.3.7.1.1.3.7.1-00	ATC MAIL PROCESSING	776
		40.3.7.1.1.3.7.1-01	The requirements of Section 3.7.1.1.3.7.1 shall apply to TAAS.	776
A1.4.4.11	ENTER STEREO FLIGHT PLAN	3.7.1.2.1.2.2-00	FLIGHT DATA CHANGES	373
		3.7.1.2.1.2.2-33	k. Stereo Flight Plan: Callsign, (A/C Data), (Speed), Coordination Time, (Altitude), Stereo Tag, (Remarks).	376
		3.7.1.2.1.2.2-34	k. Stereo Flight Plan: This message shall be used to enter an abbreviated flight plan.	376
		40.3.7.1.2.1.2-00	CONTROLLER INPUT LANGUAGE PROCESSING	783
		40.3.7.1.2.1.2-07	c. For Flight Data Changes (Section 3.7.1.2.1.2.2) all messages shall be processed by TAAS except Emergency Airport, Implement Reroute, Implement Absorption Maneuver, Create/Delete Route, and Repetitive Route Amendment.	784
A1.4.4.12	ENTER VFR FLIGHT PLAN	3.7.1.2.1.2.2-00	FLIGHT DATA CHANGES	373

Task Number	Task Statement	Paragraph Number	Requirement	Page No.
A1.4.4.12 (cont'd)	ENTER VFR FLIGHT PLAN	3.7.1.2.1.2.2-52	u. VFR Flight Plan: Aircraft Identification, (A/C Data), (Beacon Code), (Departure Point), (Destination), (True Air Speed), (Coordination Fix), (Coordination Time), (Altitude), (Route), (Estimated Point of Penetration of ADIZ/DEWIZ Boundary), (Elapsed Time to Point of ADIZ/DEWIZ ... (See SLS).	377
		3.7.1.2.1.2.2-53	u. VFR Flight Plan: This message shall be used to establish a set of data for a VFR flight.	377
		3.7.1.2.1.2.2-54	u. VFR Flight Plan: The coordination field shall be used to designate that posting determination shall be performed on the VFR flight plan and to route VFR flight data to controller designated positions and facilities.	377
		40.3.7.1.2.1.2-00	CONTROLLER INPUT LANGUAGE PROCESSING	783
		40.3.7.1.2.1.2-07	c. For Flight Data Changes (Section 3.7.1.2.1.2.2) all messages shall be processed by TAAS except Emergency Airport, Implement Reroute, Implement Absorption Maneuver, Create/Delete Route, and Repetitive Route Amendment.	784
A1.4.4.13	REQUEST FLIGHT PLAN READOUT	3.7.1.2.1.1.6-00	MESSAGE COMPOSITION AND RESPONSE DISPLAY	358
		3.7.1.2.1.1.6-04	The Response Display shall contain information that is a response to a query made by the controller to the data base such as a flight plan readout, a route readout, weather data readout, or ATC mail message readout.	358
		40.3.7.1.2.1.1.2-00	FLIGHT DATA DISPLAY	779
		40.3.7.1.2.1.1.2-35	In addition to the Flight Data Area, a Flight Data Readout Area shall be established to display all of the flight data on one particular flight that is selected by the controller.	781
		40.3.7.1.2.1.1.5-00	MESSAGE COMPOSITION AND RESPONSE DISPLAY	783
		40.3.7.1.2.1.1.5-01	The requirements of Section 3.7.1.2.1.1.6 shall apply to TAAS.	783
A1.4.4.14	ENTER SCRATCH PAD DATA IN FULL DATA BLOCK	3.7.1.2.1.1.1-00	SITUATION DISPLAY	323
		3.7.1.2.1.1.1.3-00	TARGET AND TRACK DATA AND SYMBOLOGY	330
		3.7.1.2.1.1.1.3-55	bk. Scratch Pad Data shall be entered by the controller and shall consist of up to three characters of information.	334
		40.3.7.1.2.1.1.1-00	SITUATION DISPLAY	779

Task to Requirement Traceability Matrix

Task Number	Task Statement	Paragraph Number	Requirement	Page No.
A1.4.4.14 (cont'd)	ENTER SCRATCH PAD DATA IN FULL DATA BLOCK	40.3.7.1.2.1.1.1-01	The requirements of Section 3.7.1.2.1.1.1 and subordinate sections shall apply to TAAS except that Graphic Weather from RWP, Conflict Resolution and MSAW Advisories, Route Display, and Flight Plan Conflict/Trial Plan Display are not required.	779
A1.4.5.1	RECEIVE FLIGHT DATA REVISION	40.3.7.1.1.3.3.1.2-00	AMEND FLIGHT PLAN DATA	772
		40.3.7.1.1.3.3.1.2-04	The modification of certain fields of the flight plan shall cause new outputs and notifications to be sent to appropriate sectors and facilities.	772
		40.3.7.1.2.1.1.2-00	FLIGHT DATA DISPLAY	779
		40.3.7.1.2.1.1.2-20	c. Updating - Flight Data Fields shall be updated by the system because of direct modifications of the flight data fields or system processing of flight changes.	780
		40.3.7.1.2.1.1.2-22	c. Updating - Option 1 shall provide automatic update of information in the FDE with emphasis of the new data.	780
		40.3.7.1.2.1.1.2-23	c. Updating - Automatic update shall consist of the existing data being replaced by the new data.	780
		40.3.7.1.2.1.1.2-25	c. Updating - Option 2 shall provide for the automatic update in the FDE with emphasis of the new data and shall require controller acknowledgment to delete the emphasis.	780
		40.3.7.1.2.1.1.2-26	c. Updating - Option 3 shall provide new data to be displayed and emphasized in the Flight Data Area on the Flight Data Display and shall require controller acknowledgment.	780
A1.4.5.2	EMPHASIZE FLIGHT DATA ENTRY POSTING FOR REMINDER ACTION	40.3.7.1.2.1.1.2-00	FLIGHT DATA DISPLAY	779
		40.3.7.1.2.1.1.2-38	It shall be possible for the controller to emphasize an entire FDE, FDE field, and FDE subfields.	781
A1.4.5.3	ENTER FLIGHT PLAN AMENDMENT	3.7.1.2.1.2.2-00	FLIGHT DATA CHANGES	373
		3.7.1.2.1.2.2-03	a. Flight Data Amendment: Flight Identification, Field to be Modified, New Data.	373
		3.7.1.2.1.2.2-04	a. Flight Data Amendment: This message shall be used to modify, add to, or delete previously entered flight data for any flight plan.	373
		3.7.1.2.1.2.2-15	a. Flight Data Amendment: This message shall be used to enter a flight rule change from either VFR to IFR or IFR to VFR.	373

Task Number	Task Statement	Paragraph Number	Requirement	Page No.
A1.4.5.3 (cont'd)	ENTER FLIGHT PLAN AMENDMENT	3.7.1.2.1.2.2-06	a. Flight Data Amendment: Amendment data, when accepted, shall become a part of the flight data base.	373
		3.7.1.2.1.2.2-07	a. Flight Data Amendment: The flight data fields that can be amended are listed in Table 3.7-1. (See SLS).	373
		40.3.7.1.2.1.2-00	CONTROLLER INPUT LANGUAGE PROCESSING	783
		40.3.7.1.2.1.2-07	c. For Flight Data Changes (Section 3.7.1.2.1.2.2) all messages shall be processed by TAAS except Emergency Airport, Implement Reroute, Implement Absorption Maneuver, Create/Delete Route, and Repetitive Route Amendment.	784
A1.4.5.4	ENTER PILOT'S POSITION REPORT IN SYSTEM	3.7.1.2.1.2.2-00	FLIGHT DATA CHANGES	373
		3.7.1.2.1.2.2-22	g. Progress Report: Flight Identification, Fix, (Actual Time at Fix), (Pilot Estimate at Fix), (Next Fix), (Pilot Estimate at Next Fix), (Altitude).	375
		3.7.1.2.1.2.2-23	g. Progress Report: This message shall be used to update the position in time of an active flight plan.	375
		40.3.7.1.2.1.2-00	CONTROLLER INPUT LANGUAGE PROCESSING	783
		40.3.7.1.2.1.2-07	c. For Flight Data Changes (Section 3.7.1.2.1.2.2) all messages shall be processed by TAAS except Emergency Airport, Implement Reroute, Implement Absorption Maneuver, Create/Delete Route, and Repetitive Route Amendment.	784
A1.4.5.5	DELETE FLIGHT DATA ENTRY EMPHASIS	3.7.1.2.1.2.2-00	FLIGHT DATA CHANGES	373
		3.7.1.2.1.2.2-37	n. FDE and Data Field Emphasis: Flight Identification, Field to be Emphasized, Emphasized data.	376
		3.7.1.2.1.2.2-38	n. FDE and Data Field Emphasis: This message shall enable the controller to add, modify, or delete emphasis on certain data fields in Table 3.7-1.	376
		40.3.7.1.2.1.1.2-00	FLIGHT DATA DISPLAY	779
		40.3.7.1.2.1.1.2-38	It shall be possible for the controller to emphasize an entire FDE, FDE field, and FDE subfields.	781
		40.3.7.1.2.1.1.2-39	The controller shall subsequently be able to restore the FDE to its normal display.	781
		40.3.7.1.2.1.2-00	CONTROLLER INPUT LANGUAGE PROCESSING	783

Task Number	Task Statement	Paragraph Number	Requirement	Page No.
A1.4.5.5 (cont'd)	DELETE FLIGHT DATA ENTRY EMPHASIS	40.3.7.1.2.1.2-07	c. For Flight Data Changes (Section 3.7.1.2.1.2.2) all messages shall be processed by TAAS except Emergency Airport, Implement Reroute, Implement Absorption Maneuver, Create/Delete Route, and Repetitive Route Amendment.	784
A1.4.5.9	INFORM CONTROLLER UNABLE FLIGHT PLAN AMENDMENT	3.7.1.1.3.7.1-00	ATC MAIL MESSAGE PROCESSING	299
		3.7.1.1.3.7.1-01	The ACCC shall provide the capability to communicate via electronic media.	299
		40.3.7.1.1.3.7.1-00	ATC MAIL PROCESSING	776
		40.3.7.1.1.3.7.1-01	The requirements of Section 3.7.1.1.3.7.1 shall apply to TAAS.	776
A1.4.5.10	RECEIVE CONTROLLER ADVICE OF UNABLE FLIGHT PLAN AMENDMENT	3.7.1.1.3.7.1-00	ATC MAIL MESSAGE PROCESSING	299
		3.7.1.1.3.7.1-01	The ACCC shall provide the capability to communicate via electronic media.	299
		40.3.7.1.1.3.7.1-00	ATC MAIL PROCESSING	776
		40.3.7.1.1.3.7.1-01	The requirements of Section 3.7.1.1.3.7.1 shall apply to TAAS.	776
A1.4.5.11	RECEIVE REQUESTED FLIGHT PLAN CHANGES	3.7.1.1.3.7.1-00	ATC MAIL MESSAGE PROCESSING	299
		3.7.1.1.3.7.1-01	The ACCC shall provide the capability to communicate via electronic media.	299
		40.3.7.1.1.3.7.1-00	ATC MAIL PROCESSING	776
		40.3.7.1.1.3.7.1-01	The requirements of Section 3.7.1.1.3.7.1 shall apply to TAAS.	776
A1.4.6.1	RECEIVE HANDOFF REQUEST	3.7.1.1.3.2.4-00	DETERMINATION OF TRACK STATUS	275
		3.7.1.1.3.2.4-04	d. Tracks in Crosstell status are those tracks for which handoffs have been initiated from an adjacent facility.	275
		3.7.1.1.3.2.4-05	d. The crosstell status exists from the time of receipt of the track data associated with the initial handoff message until the handoff is accepted or recalled through controller action.	275
		3.7.1.2.1.1.1-00	SITUATION DISPLAY	323
		3.7.1.2.1.1.1.3-00	TARGET AND TRACK DATA AND SYMBOLOGY	330

Task Number	Task Statement	Paragraph Number	Requirement	Page No.
A1.4.6.1 (cont'd)	RECEIVE HANDOFF REQUEST	3.7.1.2.1.1.1.3-45	ba. Handoff status shall denote when a handoff has been initiated, accepted or retracted for a track. The identity of the initiating sector/position shall be denoted to both the initiating and the receiving sectors/positions.	333
		3.7.1.2.1.1.1.3-61	ce. The following emergency and alert conditions shall be coded in the FDB: Track in handoff status to the sector.	334
		3.7.1.2.1.1.1.3-72	db. Some of the conditions that shall result in the display of a FDB for a track are: Aircraft is in handoff or pointout status to this sector.	334
		40.3.7.1.1.3.2-00	AUTOMATIC TRACKING CAPABILITY	769
		40.3.7.1.1.3.2-01	The requirements of Section 3.7.1.1.3.2 and subordinate sections shall apply to the TAAS with the following exceptions.	769
		40.3.7.1.2.1.1.1-00	SITUATION DISPLAY	779
		40.3.7.1.2.1.1.1-01	The requirements of Section 3.7.1.2.1.1.1 and subordinate sections shall apply to TAAS except that Graphic Weather from RWP, Conflict Resolution and MSAW Advisories, Route Display, and Flight Plan Conflict/Trial Plan Display are not required.	779
A1.4.6.2	DENY HANDOFF	3.7.1.2.1.2.1-00	TRACK CONTROL	368
		3.7.1.2.1.2.1-02	a. Accept/Retract/Reject Handoff: Flight Identification(s), (Reject Indicator).	368
		3.7.1.2.1.2.1-03	a. Accept/Retract/Reject Handoff: This message shall be used to accept or reject control of a track or tracks whose initiate handoff message was addressed to the entering sector from a designated sector.	368
		40.3.7.1.2.1.2-00	CONTROLLER INPUT LANGUAGE PROCESSING	783
		40.3.7.1.2.1.2-01	a. The TAAS shall meet the requirements of Section 3.7.1.2.1.2 and subordinate sections with the following exceptions: Entry of the following message categories is not required: 1) Metering Parameter Changes (Section 3.7.1.2.1.2.5) and 2) Automation Processing Messages (Section 3.7.1.2.1.2.11)	783
		40.3.7.1.2.1.2-02	b. For track control messages all messages except Inhibit/Restore Automatic Pointout, Group Suppression, Vertical Velocity Readout, Flight Plan Extrapolation, Fix/Time Readout, Range/Bearing Readout, Range/Bearing/Fix Readout, Continuous Range Readout, and Radar Contact shall be processed.	783

Task Number	Task Statement	Paragraph Number	Requirement	Page No.
A1.4.6.3	ACCEPT VERBAL HANDOFF/ INITIATE MANUAL TRACK START	3.7.1.1.3.2.2-00	TRACK INITIATION	274
		3.7.1.1.3.2.2-05	The ACCC shall provide the capability of manually initiating a track through controller input even if the reports associated with the target to be tracked consist entirely of primary (search) reports.	274
		3.7.1.2.1.1.1-00	SITUATION DISPLAY	323
		3.7.1.2.1.1.1.3-00	TARGET AND TRACK DATA AND SYMBOLOGY	330
		3.7.1.2.1.2.1-00	TRACK CONTROL	368
		3.7.1.2.1.2.1-05	b. Track: Flight Identification, Track Action (Coast, Start, Drop, etc.), (Track Start Position), (Speed), (Heading), (Assigned Altitude).	368
		3.7.1.2.1.2.1-06	b. Track: This message shall be used to change the tracking status of an aircraft.	368
		3.7.1.2.1.2.1-07	b. Track: The Track message shall be designed to enable the controller to modify the tracking function for a particular aircraft.	368
		40.3.7.1.1.3.2-00	AUTOMATIC TRACKING CAPABILITY	769
		40.3.7.1.1.3.2-01	The requirements of Section 3.7.1.1.3.2 and subordinate sections shall apply to the TAAS with the following exceptions.	769
		40.3.7.1.2.1.1.1-00	SITUATION DISPLAY	779
		40.3.7.1.2.1.1.1-01	The requirements of Section 3.7.1.2.1.1.1 and subordinate sections shall apply to TAAS except that Graphic Weather from RWP, Conflict Resolution and MSAW Advisories, Route Display, and Flight Plan Conflict/Trial Plan Display are not required.	779
		40.3.7.1.2.1.2-00	CONTROLLER INPUT LANGUAGE PROCESSING	783
		40.3.7.1.2.1.2-01	a. The TAAS shall meet the requirements of Section 3.7.1.2.1.2 and subordinate sections with the following exceptions: Entry of the following message categories is not required: 1) Metering Parameter Changes (Section 3.7.1.2.1.2.5) and 2) Automation Processing Messages (Section 3.7.1.2.1.2.11)	783

Task Number	Task Statement	Paragraph Number	Requirement	Page No.
A1.4.6.3 (cont'd)	ACCEPT VERBAL HANDOFF/ INITIATE MANUAL TRACK START	40.3.7.1.2.1.2-02	b. For track control messages all messages except Inhibit/Restore Automatic Pointout, Group Suppression, Vertical Velocity Readout, Flight Plan Extrapolation, Fix/Time Readout, Range/Bearing Readout, Range/Bearing/Fix Readout, Continuous Range Readout, and Radar Contact shall be processed.	783
A1.4.6.4	ACCEPT AUTOMATIC HANDOFF	3.7.1.2.1.2.1-00	TRACK CONTROL	368
		3.7.1.2.1.2.1-02	a. Accept/Retract/Reject Handoff: Flight Identification(s), (Reject Indicator).	368
		3.7.1.2.1.2.1-03	a. Accept/Retract/Reject Handoff: This message shall be used to accept or reject control of a track or tracks whose initiate handoff message was addressed to the entering sector from a designated sector.	368
		40.3.7.1.1.3.2-00	AUTOMATIC TRACKING CAPABILITY	769
		40.3.7.1.1.3.2-13	e. The requirements of Section 3.7.1.1.3.2.8.2 shall be replaced as follows:	770
		40.3.7.1.1.3.2-15	e. The automatic handoff function shall be provided between approach control and enroute environments.	770
		40.3.7.1.1.3.2-30	e. The controller receiving the handoff of a track shall be provided the capability to take control by making an accept handoff action.	771
		40.3.7.1.2.1.2-00	CONTROLLER INPUT LANGUAGE PROCESSING	783
		40.3.7.1.2.1.2-01	a. The TAAS shall meet the requirements of Section 3.7.1.2.1.2 and subordinate sections with the following exceptions: Entry of the following message categories is not required: 1) Metering Parameter Changes (Section 3.7.1.2.1.2.5) and 2) Automation Processing Messages (Section 3.7.1.2.1.2.11)	783
		40.3.7.1.2.1.2-02	b. For track control messages all messages except Inhibit/Restore Automatic Pointout, Group Suppression, Vertical Velocity Readout, Flight Plan Extrapolation, Fix/Time Readout, Range/Bearing Readout, Range/Bearing/Fix Readout, Continuous Range Readout, and Radar Contact shall be processed.	783
A1.4.6.6	DETERMINE RESPONSE TO HANDOFF REQUEST	3.7.1.2.1.1.1-00	SITUATION DISPLAY	323
		3.7.1.2.1.1.1.2-00	GEOGRAPHIC MAP DATA	323
		3.7.1.2.1.1.1.3-00	TARGET AND TRACK DATA AND SYMBOLOGY	330

Task Number	Task Statement	Paragraph Number	Requirement	Page No.
A1.4.6.6 (cont'd)	DETERMINE RESPONSE TO HANDOFF REQUEST	3.7.1.2.1.1.1.3-44	The information conveyed in the track position symbol and FDB shall be adaptable from the following set of data: Callsign, Mode C Altitude or Pilot Reported Altitude and indication of Pilot Reported Altitude, Handoff Status/Indicator, Aircraft Type, Assigned Altitude or Interim ... (See SLS).	332
		40.3.7.1.2.1.1.1-00	SITUATION DISPLAY	779
		40.3.7.1.2.1.1.1-01	The requirements of Section 3.7.1.2.1.1.1 and subordinate sections shall apply to TAAS except that Graphic Weather from RWP, Conflict Resolution and MSAW Advisories, Route Display, and Flight Plan Conflict/Trial Plan Display are not required.	779
A1.4.6.7	RECEIVE CONTROL OF AIRCRAFT	3.7.1.1.3.7.1-00	ATC MAIL MESSAGE PROCESSING	299
		3.7.1.1.3.7.1-01	The ACCC shall provide the capability to communicate via electronic media.	299
		40.3.7.1.1.3.7.1-00	ATC MAIL PROCESSING	776
		40.3.7.1.1.3.7.1-01	The requirements of Section 3.7.1.1.3.7.1 shall apply to TAAS.	776
A1.4.6.8	REQUEST TRANSFER OF CONTROL	3.7.1.1.3.7.1-00	ATC MAIL MESSAGE PROCESSING	299
		3.7.1.1.3.7.1-01	The ACCC shall provide the capability to communicate via electronic media.	299
		40.3.7.1.1.3.7.1-00	ATC MAIL PROCESSING	776
		40.3.7.1.1.3.7.1-01	The requirements of Section 3.7.1.1.3.7.1 shall apply to TAAS.	776
A1.4.7.1	INITIATE HANDOFF FUNCTION	3.7.1.2.1.2.1-00	TRACK CONTROL	368
		3.7.1.2.1.2.1-08	c. Initiate Handoff: Flight Identification, (Sector or Facility).	368
		3.7.1.2.1.2.1-09	c. Initiate Handoff: This message shall be used to manually initiate the transfer of control of a tracked aircraft from one sector or facility to another.	368
		40.3.7.1.1.3.2-00	AUTOMATIC TRACKING CAPABILITY	769
		40.3.7.1.1.3.2-13	a. The requirements of Section 3.7.1.1.3.2.8.4 shall be replaced as follows:	770
		40.3.7.1.1.3.2-29	e. The controller shall have the capability to manually initiate a handoff for a specific controlled track to a specific sector or facility.	771
		40.3.7.1.2.1.2-00	CONTROLLER INPUT LANGUAGE PROCESSING	783

Task Number	Task Statement	Paragraph Number	Requirement	Page No.
A1.4.7.1 (cont'd)	INITIATE HANDOFF FUNCTION	40.3.7.1.2.1.2-01	a. The TAAS shall meet the requirements of Section 3.7.1.2.1.2 and subordinate sections with the following exceptions: Entry of the following message categories is not required: 1) Metering Parameter Changes (Section 3.7.1.2.1.2.5) and 2) Automation Processing Messages (Section 3.7.1.2.1.2.11)	783
		40.3.7.1.2.1.2-02	b. For track control messages all messages except Inhibit/Restore Automatic Pointout, Group Suppression, Vertical Velocity Readout, Flight Plan Extrapolation, Fix/Time Readout, Range/Bearing Readout, Range/Bearing/Fix Readout, Continuous Range Readout, and Radar Contact shall be processed.	783
		40.3.7.1.2.1.2-06	b. An Initiate Handoff message to the next sector or facility based on flight trajectory shall not apply to TAAS.	784
A1.4.7.2	OBSERVE AUTOMATIC INITIATION OF HANDOFF	3.7.1.2.1.1.1-0C	SITUATION DISPLAY	323
		3.7.1.2.1.1.1.3-00	TARGET AND TRACK DATA AND SYMBOLOGY	330
		3.7.1.2.1.1.1.3-44	The information conveyed in the track position symbol and FDB shall be adaptable from the following set of data: Callsign, Mode C Altitude or Pilot Reported Altitude and indication of Pilot Reported Altitude, Handoff Status/Indicator, Aircraft Type, Assigned Altitude or Interim ... (See SLS).	332
		3.7.1.2.1.1.1.3-45	ba. Handoff status shall denote when a handoff has been initiated, accepted or retracted for a track. The identity of the initiating sector/position shall be denoted to both the initiating and the receiving sectors/positions.	333
		40.3.7.1.1.3.2-00	AUTOMATIC TRACKING CAPABILITY	769
		40.3.7.1.1.3.2-13	e. The requirements of Section 3.7.1.1.3.2.8.2 shall be replaced as follows:	770
		40.3.7.1.1.3.2-15	c. The automatic handoff function shall be provided between approach control and enroute environments.	770
		40.3.7.1.2.1.1.1-00	SITUATION DISPLAY	779
		40.3.7.1.2.1.1.1-01	The requirements of Section 3.7.1.2.1.1.1 and subordinate sections shall apply to TAAS except that Graphic Weather from RWP, Conflict Resolution and MSAW Advisories, Route Display, and Flight Plan Conflict/Trial Plan Display are not required.	779
A1.4.7.3	RETRACT HANDOFF	3.7.1.2.1.2.1-00	TRACK CONTROL	368

Task Number	Task Statement	Paragraph Number	Requirement	Page No.
A1.4.7.3 (cont'd)	RETRACT HANDOFF	3.7.1.2.1.2.1-02	a. Accept/Retract/Reject Handoff: Flight Identification(s), (Reject Indicator).	368
		3.7.1.2.1.2.1-04	a. Accept/Retract/Reject Handoff: If the message is entered for an aircraft already under control of the sector or facility entering the message, it shall be interpreted as a retraction of the transfer of control.	368
		40.3.7.1.2.1.2-00	CONTROLLER INPUT LANGUAGE PROCESSING	783
		40.3.7.1.2.1.2-01	a. The TAAS shall meet the requirements of Section 3.7.1.2.1.2 and subordinate sections with the following exceptions: Entry of the following message categories is not required: 1) Metering Parameter Changes (Section 3.7.1.2.1.2.5) and 2) Automation Processing Messages (Section 3.7.1.2.1.2.11)	783
		40.3.7.1.2.1.2-02	b. For track control messages all messages except Inhibit/Restore Automatic Pointout, Group Suppression, Vertical Velocity Readout, Flight Plan Extrapolation, Fix/Time Readout, Range/Bearing Readout, Range/Bearing/Fix Readout, Continuous Range Readout, and Radar Contact shall be processed.	783
A1.4.7.4	RECEIVE HANDOFF ACCEPTANCE	3.7.1.2.1.1.1-00	SITUATION DISPLAY	323
		3.7.1.2.1.1.1.3-00	TARGET AND TRACK DATA AND SYMBOLOGY	330
		3.7.1.2.1.1.1.3-44	The information conveyed in the track position symbol and FDB shall be adaptable from the following set of data: Callsign, Mode C Altitude or Pilot Reported Altitude and indication of Pilot Reported Altitude, Handoff Status/Indicator, Aircraft Type, Assigned Altitude or Interim ... (See SLS).	332
		3.7.1.2.1.1.1.3-45	ba. Handoff status shall denote when a handoff has been initiated, accepted or retracted for a track. The identity of the initiating sector/position shall be denoted to both the initiating and the receiving sectors/positions.	333
		40.3.7.1.2.1.1.1-00	SITUATION DISPLAY	779
		40.3.7.1.2.1.1.1-01	The requirements of Section 3.7.1.2.1.1.1 and subordinate sections shall apply to TAAS except that Graphic Weather from RWP, Conflict Resolution and MSAW Advisories, Route Display, and Flight Plan Conflict/Trial Plan Display are not required.	779
A1.4.7.7	RECEIVE REQUEST FOR TRANSFER OF CONTROL	3.7.1.1.3.7.1-00	ATC MAIL MESSAGE PROCESSING	299
		3.7.1.1.3.7.1-01	The ACCC shall provide the capability to communicate via electronic media.	299

Task Number	Task Statement	Paragraph Number	Requirement	Page No.
A1.4.7.7 (cont'd)	RECEIVE REQUEST FOR TRANSFER OF CONTROL	40.3.7.1.1.3.7.1-00	ATC MAIL PROCESSING	776
		40.3.7.1.1.3.7.1-01	The requirements of Section 3.7.1.1.3.7.1 shall apply to TAAS.	776
A1.4.7.8	DETERMINE THAT AIRCRAFT IS LEAVING SECTOR	3.7.1.2.1.1.1-00	SITUATION DISPLAY	323
		3.7.1.2.1.1.1.2-00	GEOGRAPHIC MAP DATA	323
		3.7.1.2.1.1.1.3-00	TARGET AND TRACK DATA AND SYMBOLOGY	330
		3.7.1.2.1.1.1.3-14	Displayed target/track and associated Data Blocks shall be removed from the display either after reaching the sector boundary or after a parameter-designated time period has elapsed after a handoff acceptance.	331
		3.7.1.2.1.1.1.3-40	The Situation Display shall also contain a FDB associated with certain tracks within the geographic area of concern.	332
		3.7.1.2.1.1.1.3-44	The information conveyed in the track position symbol and FDB shall be adaptable from the following set of data: Callsign, Mode C Altitude or Pilot Reported Altitude and indication of Pilot Reported Altitude, Handoff Status/Indicator, Aircraft Type, Assigned Altitude or Interim ... (See SLS).	332
		40.3.7.1.2.1.1.1-00	SITUATION DISPLAY	779
		40.3.7.1.2.1.1.1-01	The requirements of Section 3.7.1.2.1.1.1 and subordinate sections shall apply to TAAS except that Graphic Weather from RWP, Conflict Resolution and MSAW Advisories, Route Display, and Flight Plan Conflict/Trial Plan Display are not required.	779
A1.4.7.9	DETECT MANUAL HANDOFF MODE INDICATION	3.7.1.2.1.1.1-00	SITUATION DISPLAY	323
		3.7.1.2.1.1.1.3-00	TARGET AND TRACK DATA AND SYMBOLOGY	330
		3.7.1.2.1.1.1.3-44	The information conveyed in the track position symbol and FDB shall be adaptable from the following set of data: Callsign, Mode C Altitude or Pilot Reported Altitude and indication of Pilot Reported Altitude, Handoff Status/Indicator, Aircraft Type, Assigned Altitude or Interim ... (See SLS).	332
		3.7.1.2.1.1.1.3-53	bi. The handoff alert indication shall denote any of the following conditions: when a handoff, which was automatically initiated, has not been accepted after a parameter designated time; when the automatic handoff function is inhibited for a track; when a handoff, which was manually ... (See SLS).	333

Task to Requirement Traceability Matrix

Task Number	Task Statement	Paragraph Number	Requirement	Page No.
A1.5.1.78 (cont'd)	EVALUATE IMPACT OF NEW A&M CONDITION	40.3.7.1.2.1.1.6-01	The requirements of Section 3.7.1.2.1.1.7 shall apply to TAAS except that the source of data shall be TCCC or manual entry from supervisor or controller position.	783
A1.5.1.80	RECEIVE NEW ROUTING FOR WEATHER AVOIDANCE FROM SUPERVISOR/ TMC	3.7.1.1.3.7.1-00	ATC MAIL MESSAGE PROCESSING	299
		3.7.1.1.3.7.1-01	The ACCC shall provide the capability to communicate via electronic media.	299
		3.7.1.2.1.1.2.1-00	FLIGHT DATA FIELDS	341
		3.7.1.2.1.1.2.1-03	Table 3.7-1 lists the Flight Plan Data fields with the maximum number of characters in the field. (See SLS).	341
		3.7.1.2.1.1.2.1-04	Route Information shall be displayed according to the following order of precedence: Preferential Route, Route of Flight, and Remarks.	341
		3.7.1.2.1.1.2.1-09	The capability shall be provided to display/delete FDE notations (FDENs) in specified fields of FDEs.	342
		3.7.1.2.1.1.2.1-80	u. The following FDEN categories shall be provided: An FDEN associated with the Route field shall denote a SWAP or preferential route.	345
		3.7.1.2.1.1.2.1-81	u. The Route field in conjunction with the FDEN shall provide for display of both the SWAP or preferential route and the associated segment of the filed route.	345
		3.7.1.2.1.2.6-00	TRAFFIC MANAGEMENT DATA CHANGES	382
		3.7.1.2.1.2.6-38	p. Reroute Data for Severe Weather Avoidance Program (SWAP): This SWAP message shall reroute all flights which have not yet departed that have a filed route going from the departure airport to the arrival airport via a specific alternate coded SWAP route.	385
		40.3.7.1.1.3.7.1-00	ATC MAIL PROCESSING	776
		40.3.7.1.1.3.7.1-01	The requirements of Section 3.7.1.1.3.7.1 shall apply to TAAS.	776
		40.3.7.1.2.1.1.2.1-00	FLIGHT DATA FIELDS	781
		40.3.7.1.2.1.1.2.1-01	a. The requirements of Section 3.7.1.2.1.1.2.1 shall apply to TAAS with the following exceptions: The Next Posted Fix, CTA at Next Posted Fix, Next Sector/Next Facility, Lateral Nonconformance Indicator, Metering/Traffic Management Advisory, and Metering/Traffic Management Advisory ... (See SLS).	781

Task Number	Task Statement	Paragraph Number	Requirement	Page No.
A1.5.1.80 (cont'd)	RECEIVE NEW ROUTING FOR WEATHER AVOIDANCE FROM SUPERVISOR/ TMC	40.3.7.1.2.1.2-00	CONTROLLER INPUT LANGUAGE PROCESSING	783
		40.3.7.1.2.1.2-01	a. The TAAS shall meet the requirements of Section 3.7.1.2.1.2 and subordinate sections with the following exceptions: Entry of the following message categories is not required: 1) Metering Parameter Changes (Section 3.7.1.2.1.2.5) and 2) Automation Processing Messages (Section 3.7.1.2.1.2.11)	783
		40.3.7.1.2.1.2-17	f. For Traffic Management Data Changes (Section 3.7.1.2.1.2.6) only Set Status of Adapted Routes, Request Situation Display, and Request Flight Data Display shall be processed.	784
A1.5.1.83	REQUEST WEATHER INFORMATION	3.7.1.1.3.7.1-00	ATC MAIL MESSAGE PROCESSING	299
		3.7.1.1.3.7.1-01	The ACCC shall provide the capability to communicate via electronic media.	299
		40.3.7.1.1.3.7.1-00	ATC MAIL PROCESSING	776
		40.3.7.1.1.3.7.1-01	The requirements of Section 3.7.1.1.3.7.1 shall apply to TAAS.	776
A1.5.2.1	RECEIVE AIRPORT SPECIFIC NOTAM	3.7.1.1.3.7.1-00	ATC MAIL MESSAGE PROCESSING	299
		3.7.1.1.3.7.1-01	The ACCC shall provide the capability to communicate via electronic media.	299
		3.7.1.2.1.1.7-00	AIRPORT ENVIRONMENTAL DATA DISPLAY	358
		3.7.1.2.1.1.7-12	For example, NOTAM data such as braking action shall be continuously updated and emphasized when a change in reported value occurs.	359
		40.3.7.1.1.3.7.1-00	ATC MAIL PROCESSING	776
		40.3.7.1.1.3.7.1-01	The requirements of Section 3.7.1.1.3.7.1 shall apply to TAAS.	776
		40.3.7.1.2.1.1.6-00	AIRPORT ENVIRONMENTAL DATA DISPLAY	783
		40.3.7.1.2.1.1.6-01	The requirements of Section 3.7.1.2.1.1.7 shall apply to TAAS except that the source of data shall be TCCC or manual entry from supervisor or controller position.	783
A1.5.2.2	RECEIVE WEATHER REPORT UPDATE (E.G., HOURLY SURFACE OBSERVATION)	3.7.1.1.3.7.1-00	ATC MAIL MESSAGE PROCESSING	299
		3.7.1.1.3.7.1-01	The ACCC shall provide the capability to communicate via electronic media.	299

Task Number	Task Statement	Paragraph Number	Requirement	Page No.
A1.5.2.2 (cont'd)	RECEIVE WEATHER REPORT UPDATE (E.G., HOURLY SURFACE OBSERVATION)	40.3.7.1.1.3.5-00	WEATHER PROCESSING CAPABILITY	775
		40.3.7.1.1.3.5-04	The TAAS shall acccept Aeronautical and Meteorological (A&M) Data Change messages from controllers and forward these messages to the Host Computer System for processing.	776
		40.3.7.1.1.3.7.1-00	ATC MAIL PROCESSING	776
		40.3.7.1.1.3.7.1-01	The requirements of Section 3.7.1.1.3.7.1 shall apply to TAAS.	776
A1.5.2.4	DETERMINE WHETHER RUNWAY CONDITIONS HAVE CHANGED	3.7.1.1.3.7.2-00	ENVIRONMENTAL AND STATUS DATA PROCESSING	299
		3.7.1.1.3.7.2-02	a. Airport Environmental Data - The ACCC shall accept temperature, centerfield winds (speed and direction), ceiling, visibility, barometric pressure, Runway Visual Range, Low Level Wind Shear Alert, and vortex advisory data.	300
		3.7.1.2.1.1.7-00	AIRPORT ENVIRONMENTAL DATA DISPLAY	358
		3.7.1.2.1.1.7-01	This logical display shall contain airport information and data from environmental sensors.	358
		3.7.1.2.1.1.7-06	e. The following types of data shall be included: Airport Information; Departure Routes, Arrival Routes, Runway Configuration, Closed Runways, Acceptance Rate, Outages and Repair Schedule, Runway Alert Data, Airport Lighting Systems Status, Instrument Landing Aids, Visual Approach ... (See SLS).	358
		3.7.1.2.1.1.7-10	This shall include a time-stamped status for runway visual range, runway lighting intensity, and wind shear (location, direction of movement, speed, and affect on aircraft performance).	359
		3.7.1.2.1.1.7-12	For example, NOTAM data such as braking action shall be continuously updated and emphasized when a change in reported value occurs.	359
		40.3.7.1.1.3.7.2-00	ENVIRONMENTAL AND STATUS DATA PROCESSING	776
		40.3.7.1.1.3.7.2-01	The requirements of Section 3.7.1.1.3.7.2 shall apply to TAAS except that the source of airport environmental data and airport equipment status data shall be TCCC or manual input.	776
		40.3.7.1.2.1.1.6-00	AIRPORT ENVIRONMENTAL DATA DISPLAY	783

Task Number	Task Statement	Paragraph Number	Requirement	Page No.
A1.5.2.4 (cont'd)	DETERMINE WHETHER RUNWAY CONDITIONS HAVE CHANGED	40.3.7.1.2.1.1.6-01	The requirements of Section 3.7.1.2.1.1.7 shall apply to TAAS except that the source of data shall be TCCC or manual entry from supervisor or controller position.	783
A1.5.2.5	DETERMINE WHETHER CONTROL ZONE IS IFR/VFR	3.7.1.1.3.7.2-00	ENVIRONMENTAL AND STATUS DATA PROCESSING	299
		3.7.1.1.3.7.2-02	a. Airport Environmental Data - The ACCC shall accept temperature, centerfield winds (speed and direction), ceiling, visibility, barometric pressure, Runway Visual Range, Low Level Wind Shear Alert, and vortex advisory data.	300
		3.7.1.2.1.1.1-00	SITUATION DISPLAY	323
		3.7.1.2.1.1.1.7-00	GRAPHIC WEATHER FROM ATC RADARS	337
		3.7.1.2.1.1.1.7-01	The Situation Display shall, at the controller's option, display graphic weather constructed from data obtained from Air Traffic Control radars.	337
		40.3.7.1.1.3.7.2-00	ENVIRONMENTAL AND STATUS DATA PROCESSING	776
		40.3.7.1.1.3.7.2-01	The requirements of Section 3.7.1.1.3.7.2 shall apply to TAAS except that the source of airport environmental data and airport equipment status data shall be TCCC or manual input.	776
		40.3.7.1.2.1.1.1-00	SITUATION DISPLAY	779
		40.3.7.1.2.1.1.1-01	The requirements of Section 3.7.1.2.1.1.1 and subordinate sections shall apply to TAAS except that Graphic Weather from RWP, Conflict Resolution and MSAW Advisories, Route Display, and Flight Plan Conflict/Trial Plan Display are not required.	779
A1.5.2.7	FORWARD RUNWAY USE DATA	3.7.1.1.3.7.1-00	ATC MAIL MESSAGE PROCESSING	299
		3.7.1.1.3.7.1-01	The ACCC shall provide the capability to communicate via electronic media.	299
		40.3.7.1.1.3.7.1-00	ATC MAIL PROCESSING	776
		40.3.7.1.1.3.7.1-01	The requirements of Section 3.7.1.1.3.7.1 shall apply to TAAS.	776
A1.5.2.9	RECEIVE RUNWAY USE DATA	3.7.1.1.3.7.1-00	ATC MAIL MESSAGE PROCESSING	299
		3.7.1.1.3.7.1-01	The ACCC shall provide the capability to communicate via electronic media.	299
		3.7.1.1.3.7.2-00	ENVIRONMENTAL AND STATUS DATA PROCESSING	299

Task Number	Task Statement	Paragraph Number	Requirement	Page No.
A1.5.2.9 (cont'd)	RECEIVE RUNWAY USE DATA	3.7.1.1.3.7.2-02	a. Airport Environmental Data - The ACCC shall accept temperature, centerfield winds (speed and direction), ceiling, visibility, barometric pressure, Runway Visual Range, Low Level Wind Shear Alert, and vortex advisory data.	300
		3.7.1.2.1.1.7-00	AIRPORT ENVIRONMENTAL DATA DISPLAY	358
		3.7.1.2.1.1.7-06	e. The following types of data shall be included: Airport Information: Departure Routes, Arrival Routes, Runway Configuration, Closed Runways, Acceptance Rate, Outages and Repair Schedule, Runway Alert Data, Airport Lighting Systems Status, Instrument Landing Aids, Visual Approach ... (See SLS).	358
		3.7.1.2.1.1.7-10	This shall include a time-stamped status for runway visual range, runway lighting intensity, and wind shear (location, direction of movement, speed, and effect on aircraft performance).	359
		3.7.1.2.1.1.7-11	As established through adaptation, selected data items (e.g., closed runways, DASI, etc.) shall be emphasized to indicate to the controller that an automatic update has occurred on the display.	359
		3.7.1.2.1.1.7-12	For example, NOTAM data such as braking action shall be continuously updated and emphasized when a change in reported value occurs.	359
		40.3.7.1.1.3.7.1-00	ATC MAIL PROCESSING	776
		40.3.7.1.1.3.7.1-01	The requirements of Section 3.7.1.1.3.7.1 shall apply to TAAS.	776
		40.3.7.1.1.3.7.2-00	ENVIRONMENTAL AND STATUS DATA PROCESSING	776
		40.3.7.1.1.3.7.2-01	The requirements of Section 3.7.1.1.3.7.2 shall apply to TAAS except that the source of airport environmental data and airport equipment status data shall be TCCC or manual input.	776
		40.3.7.1.2.1.1.6-00	AIRPORT ENVIRONMENTAL DATA DISPLAY	783
		40.3.7.1.2.1.1.6-01	The requirements of Section 3.7.1.2.1.1.7 shall apply to TAAS except that the source of data shall be TCCC or manual entry from supervisor or controller position.	783
A1.5.2.10	DETECT AIRPORT ENVIRONMENTAL DATA ALERT	3.7.1.1.3.7.2-00	ENVIRONMENTAL AND STATUS DATA PROCESSING	299

Task Number	Task Statement	Paragraph Number	Requirement	Page No.
A1.5.2.10 (cont'd)	DETECT AIRPORT ENVIRONMENTAL DATA ALERT	3.7.1.1.3.7.2-05	c. Environmental and ATC Equipment Alerts - The ACCC shall provide selected environmental and equipment operational status data to the maintenance and operational control positions in such a manner as to assure timely controller response.	300
		3.7.1.2.1.1.7-00	AIRPORT ENVIRONMENTAL DATA DISPLAY	358
		3.7.1.2.1.1.7-11	As established through adaptation, selected data items (e.g., closed runways, DASI, etc.) shall be emphasized to indicate to the controller that an automatic update has occurred on the display.	359
		40.3.7.1.1.3.7.2-00	ENVIRONMENTAL AND STATUS DATA PROCESSING	776
		40.3.7.1.1.3.7.2-01	The requirements of Section 3.7.1.1.3.7.2 shall apply to TAAS except that the source of airport environmental data and airport equipment status data shall be TCCC or manual input.	776
		40.3.7.1.2.1.1.6-00	AIRPORT ENVIRONMENTAL DATA DISPLAY	783
		40.3.7.1.2.1.1.6-01	The requirements of Section 3.7.1.2.1.1.7 shall apply to TAAS except that the source of data shall be TCCC or manual entry from supervisor or controller position.	783
A1.5.2.11	DETERMINE FAULTY AIRPORT ENVIRONMENTAL SENSOR	3.7.1.1.3.7.2-00	ENVIRONMENTAL AND STATUS DATA PROCESSING	299
		3.7.1.1.3.7.2-02	a. Airport Environmental Data - The ACCC shall accept temperature, centerfield winds (speed and direction), ceiling, visibility, barometric pressure, Runway Visual Range, Low Level Wind Shear Alert, and vortex advisory data.	300
		3.7.1.2.1.1.7-00	AIRPORT ENVIRONMENTAL DATA DISPLAY	358
		3.7.1.2.1.1.7-01	This logical display shall contain airport information and data from environmental sensors.	358
		3.7.1.2.1.1.7-02	a. The following types of data shall be included: Barometric pressure (DASI).	358
		3.7.1.2.1.1.7-03	b. The following types of data shall be included: Center field wind direction, speed, and gust speed (CF).	358
		3.7.1.2.1.1.7-04	c. The following types of data shall be included: Runway Visual Range (RVR) and supplementary data character (maximum of three for each runway assigned).	358
		3.7.1.2.1.1.7-05	d. The following types of data shall be included: Boundary surface wind direction and speed (Low Level Wind Shear Alert System data).	358

Task Number	Task Statement	Paragraph Number	Requirement	Page No.
A1.5.2.11 (cont'd)	DETERMINE FAULTY AIRPORT ENVIRONMENTAL SENSOR	3.7.1.2.1.1.7-06	e. The following types of data shall be included: Airport Information: Departure Routes, Arrival Routes, Runway Configuration, Closed Runways, Acceptance Rate, Outages and Repair Schedule, Runway Alert Data, Airport Lighting Systems Status, Instrument Landing Aids, Visual Approach ... (See SLS).	358
		40.3.7.1.1.3.7.2-00	ENVIRONMENTAL AND STATUS DATA PROCESSING	776
		40.3.7.1.1.3.7.2-01	The requirements of Section 3.7.1.1.3.7.2 shall apply to TAAS except that the source of airport environmental data and airport equipment status data shall be TCCC or manual input.	776
		40.3.7.1.2.1.1.6-00	AIRPORT ENVIRONMENTAL DATA DISPLAY	783
		40.3.7.1.2.1.1.6-01	The requirements of Section 3.7.1.2.1.1.7 shall apply to TAAS except that the source of data shall be TCCC or manual entry from supervisor or controller position.	783
A1.5.2.12	ENTER AIRPORT ENVIRONMENTAL SENSOR DATA OVERRIDE	3.7.1.2.1.2.3-00	AERONAUTICAL AND METEOROLOGICAL DATA CHANGES	379
		3.7.1.2.1.2.3-13	d. Sensor Override: This message shall be used to control the acceptance of data received from an airport environmental sensor.	380
		3.7.1.2.1.2.3-14	d. Sensor Override: When an airport environmental sensor is determined to be faulty, the capability shall be provided to inhibit the data from entering the system data base.	380
		3.7.1.2.1.2.3-16	d. Sensor Override: At the time an innibit data message is entered, the capability shall be provided to optionally input a fallback value for the sensor.	380
		3.7.1.2.1.2.3-18	d. Sensor Override: If a fallback value is not provided at the time an inhibit data message is entered, the capability shall be provided to enter a value at a later time provided a permit data action was not taken during the interim time period.	380
		3.7.1.2.1.2.3-19	d. Sensor Override: When this fallback value is provided, it shall be displayed in lieu of the data sent by the sensor.	380
		40.3.7.1.2.1.2-00	CONTROLLER INPUT LANGUAGE PROCESSING	783
		40.3.7.1.2.1.2-12	d. For Aeronautical and Meteorological Data Changes (Section 3.7.1.2.1.2.3) only the A&M Data Amendment and Sensor Override shall be processed.	784
A1.5.2.13	RECEIVE NOTICE OF FAULTY AIRPORT ENVIRONMENTAL SENSOR	3.7.1.1.3.7.1-00	ATC MAIL MESSAGE PROCESSING	299

Task Number	Task Statement	Paragraph Number	Requirement	Page No.
A1.5.2.13 (cont'd)	RECEIVE NOTICE OF FAULTY AIRPORT ENVIRONMENTAL SENSOR	3.7.1.1.3.7.1-01	The ACCC shall provide the capability to communicate via electronic media.	299
		3.7.1.1.3.7.2-00	ENVIRONMENTAL AND STATUS DATA PROCESSING	299
		3.7.1.1.3.7.2-05	c. Environmental and ATC Equipment Alerts - The ACCC shall provide selected environmental and equipment operational status data to the maintenance and operational control positions in such a manner as to assure timely controller response.	300
		40.3.7.1.1.3.7.1-00	ATC MAIL PROCESSING	776
		40.3.7.1.1.3.7.1-01	The requirements of Section 3.7.1.1.3.7.1 shall apply to TAAS.	776
		40.3.7.1.1.3.7.2-00	ENVIRONMENTAL AND STATUS DATA PROCESSING	776
		40.3.7.1.1.3.7.2-01	The requirements of Section 3.7.1.1.3.7.2 shall apply to TAAS except that the source of airport environmental data and airport equipment status data shall be TCCC or manual input.	776
A1.5.2.76	RECEIVE GENERAL NATURE NOTAM	3.7.1.1.3.7.1-00	ATC MAIL MESSAGE PROCESSING	299
		3.7.1.1.3.7.1-01	The ACCC shall provide the capability to communicate via electronic media.	299
		40.3.7.1.1.3.7.1-00	ATC MAIL PROCESSING	776
		40.3.7.1.1.3.7.1-01	The requirements of Section 3.7.1.1.3.7.1 shall apply to TAAS.	776
A1.5.2.77	ACKNOWLEDGE AIRPORT ENVIRONMENTAL DATA ALERT	3.7.1.2.1.1.7-00	AIRPORT ENVIRONMENTAL DATA DISPLAY	358
		3.7.1.2.1.1.7-11	As established through adaptation, selected data items (e.g., closed runways, UASI, etc.) shall be emphasized to indicate to the controller that an automatic update has occurred on the display.	359
		3.7.1.2.1.1.7-13	The data shall remain emphasized for either an adapted time period or until the controller deselects the emphasis.	359
		40.3.7.1.2.1.1.6-00	AIRPORT ENVIRONMENTAL DATA DISPLAY	783
		40.3.7.1.2.1.1.6-01	The requirements of Section 3.7.1.2.1.1.7 shall apply to TAAS except that the source of data shall be TCCC or manual entry from supervisor or controller position.	783
A1.5.2.78	REVIEW DISPLAYED WEATHER INFORMATION	3.7.1.2.1.1.7-00	AIRPORT ENVIRONMENTAL DATA DISPLAY	358
		40.3.7.1.1.3.5-00	WEATHER PROCESSING CAPABILITY	775

Task Number	Task Statement	Paragraph Number	Requirement	Page No.
A1.4.7.9 (cont'd)	DETECT MANUAL HANDOFF MODE INDICATION	40.3.7.1.1.3.2-00	AUTOMATIC TRACKING CAPABILITY	769
		40.3.7.1.1.3.2-13	e. The requirements of Section 3.7.1.1.3.2.8.2 shall be replaced as follows:	770
		40.3.7.1.1.3.2-22	e.2. The automatic handoff function shall generate for display an appropriate handoff alert indication to the sector position which is controlling the track when one of the following conditions exist: When the automatic handoff function is inhibited for a track.	770
		40.3.7.1.2.1.1.1-00	SITUATION DISPLAY	779
		40.3.7.1.2.1.1.1-01	The requirements of Section 3.7.1.2.1.1.1 and subordinate sections shall apply to TAAS except that Graphic Weather from RWP, Conflict Resolution and MSAW Advisories, Route Display, and Flight Plan Conflict/Trial Plan Display are not required.	779
A1.4.7.10	REQUEST TRANSFER OF FLIGHT PLAN DATA TO ANOTHER FACILITY	3.7.1.2.1.2.2-00	FLIGHT DATA CHANGES	373
		3.7.1.2.1.2.2-28	i. Transfer Flight Plan: Flight Identification(s), Facility.	375
		3.7.1.2.1.2.2-29	i. Transfer Flight Plan: This message shall be used to cause the transmission of flight plan data to a Facility (ACCC, TCCC, ARTS, TAAS, or ISSS) regardless of the scheduled time for transmission.	375
		40.3.7.1.1.3.3.1.6-00	TRANSFER OF INTERFACILITY FLIGHT PLAN DATA	773
		40.3.7.1.1.3.3.1.6-01	The TAAS shall provide the capability to forward flight plan data to other facilities; this could be accomplished using existing Host capabilities.	773
		40.3.7.1.1.3.3.1.6-02	The data shall be transferred as a result of controller action.	773
		40.3.7.1.1.3.3.1.6-03	The controller shall be able to enter flight plan data into the system and then have the entered data forwarded to a designated facility.	773
		40.3.7.1.2.1.2-00	CONTROLLER INPUT LANGUAGE PROCESSING	783
		40.3.7.1.2.1.2-01	a. The TAAS shall meet the requirements of Section 3.7.1.2.1.2 and subordinate sections with the following exceptions: Entry of the following message categories is not required: 1) Metering Parameter Changes (Section 3.7.1.2.1.2.5) and 2) Automation Processing Messages (Section 3.7.1.2.1.2.11)	783

Task Number	Task Statement	Paragraph Number	Requirement	Page No.
A1.4.7.10 (cont'd)	REQUEST TRANSFER OF FLIGHT PLAN DATA TO ANOTHER FACILITY	40.3.7.1.2.1.2-07	c. For Flight Data Changes (Section 3.7.1.2.1.2.2) all messages shall be processed by TAAS except Emergency Airport, Implement Reroute, Implement Absorption Maneuver, Create/Delete Route, and Repetitive Route Amendment.	784
		40.3.7.1.2.1.2-08	c. The Transfer Flight Plan message shall only apply to ARTS facilities and shall be forwarded to the Host for processing.	784
A1.4.7.11	INFORM CONTROLLER OF ANY CONDITIONS AFFECTING TRANSFER OF CONTROL	3.7.1.1.3.7.1-00	ATC MAIL MESSAGE PROCESSING	299
		3.7.1.1.3.7.1-01	The ACCC shall provide the capability to communicate via electronic media.	299
		40.3.7.1.1.3.7.1-00	ATC MAIL PROCESSING	776
		40.3.7.1.1.3.7.1-01	The requirements of Section 3.7.1.1.3.7.1 shall apply to TAAS.	776
A1.4.7.12	INFORM CONTROLLER OF RELINQUISHED CONTROL OF AIRCRAFT	3.7.1.1.3.7.1-00	ATC MAIL MESSAGE PROCESSING	299
		3.7.1.1.3.7.1-01	The ACCC shall provide the capability to communicate via electronic media.	299
		40.3.7.1.1.3.7.1-00	ATC MAIL PROCESSING	776
		40.3.7.1.1.3.7.1-01	The requirements of Section 3.7.1.1.3.7.1 shall apply to TAAS.	776
A1.4.7.13	DETECT HANDOFF ALERT INDICATION	3.7.1.2.1.1.1-00	SITUATION DISPLAY	323
		3.7.1.2.1.1.1.3-00	TARGET AND TRACK DATA AND SYMBOLOGY	330
		3.7.1.2.1.1.1.3-44	The information conveyed in the track position symbol and FDB shall be adaptable from the following set of data: Callsign, Mode C Altitude or Pilot Reported Altitude and indication of Pilot Reported Altitude, Handoff Status/Indicator, Aircraft Type, Assigned Altitude or Interim ... (See SLS).	332
		3.7.1.2.1.1.1.3-53	bi. The handoff alert indication shall denote any of the following conditions: when a handoff, which was automatically initiated, has not been accepted after a parameter designated time; when the automatic handoff function is inhibited for a track; when a handoff, which was manually ... (See SLS).	333
		3.7.1.2.1.1.1.3-64	ch. The following emergency and alert conditions shall be coded in the FDB: Handoff Alert.	334
		40.3.7.1.2.1.1.1-00	SITUATION DISPLAY	779

Task Number	Task Statement	Paragraph Number	Requirement	Page No.
A1.4.7.13 (cont'd)	DETECT HANDOFF ALERT INDICATION	40.3.7.1.2.1.1.1-01	The requirements of Section 3.7.1.2.1.1.1 and subordinate sections shall apply to TAAS except that Graphic Weather from RWP, Conflict Resolution and MSAW Advisories, Route Display, and Flight Plan Conflict/Trial Plan Display are not required.	779
A1.4.7.14	REDIRECT HANDOFF	3.7.1.2.1.2.1-00	TRACK CONTROL	369
		3.7.1.2.1.2.1-66	t. Redirect Handoff: Flight Identification, Sector or Facility.	372
		3.7.1.2.1.2.1-67	t. Redirect Handoff: This message shall provide the means for the initiating controller to redirect a handoff.	372
		3.7.1.2.1.2.1-68	t. Redirect Handoff: A retract handoff message shall be automatically sent to the sector/facility which received the original initiate handoff message.	372
		40.3.7.1.2.1.2-00	CONTROLLER INPUT LANGUAGE PROCESSING	783
		40.3.7.1.2.1.2-01	a. The TAAS shall meet the requirements of Section 3.7.1.2.1.2 and subordinate sections with the following exceptions: Entry of the following message categories is not required: 1) Metering Parameter Changes (Section 3.7.1.2.1.2.5) and 2) Automation Processing Messages (Section 3.7.1.2.1.2.11)	783
		40.3.7.1.2.1.2-02	b. For track control messages all messages except Inhibit/Restore Automatic Pointout, Group Suppression, Vertical Velocity Readout, Flight Plan Extrapolation, Fix/Time Readout, Range/Bearing Readout, Range/Bearing/Fix Readout, Continuous Range Readout, and Radar Contact shall be processed.	783
A1.4.7.15	RECEIVE HANDOFF REJECTION	3.7.1.2.1.1.1-00	SITUATION DISPLAY	323
		3.7.1.2.1.1.1.3-00	TARGET AND TRACK DATA AND SYMBOLOGY	330
		3.7.1.2.1.1.1.3-45	ba. Handoff status shall denote when a handoff has been initiated, accepted or retracted for a track. The identity of the initiating sector/position shall be denoted to both the initiating and the receiving sectors/positions.	333
		3.7.1.2.1.2.1-00	TRACK CONTROL	369
		3.7.1.2.1.2.1-03	a. Accept/Retract/Reject Handoff: This message shall be used to accept or reject control of a track or tracks whose initiate handoff message was addressed to the entering sector from a designated sector.	368
		40.3.7.1.2.1.1.1-00	SITUATION DISPLAY	779

Task Number	Task Statement	Paragraph Number	Requirement	Page No.
A1.4.7.15 (cont'd)	RECEIVE HANDOFF REJECTION	40.3.7.1.2.1.1.1-01	The requirements of Section 3.7.1.2.1.1.1 and subordinate sections shall apply to TAAS except that Graphic Weather from RWP, Conflict Resolution and MSAW Advisories, Route Display, and Flight Plan Conflict/Trial Plan Display are not required.	779
		40.3.7.1.2.1.2-00	CONTROLLER INPUT LANGUAGE PROCESSING	783
		40.3.7.1.2.1.2-01	a. The TAAS shall meet the requirements of Section 3.7.1.2.1.2 and subordinate sections with the following exceptions: Entry of the following message categories is not required: 1) Metering Parameter Changes (Section 3.7.1.2.1.2.5) and 2) Automation Processing Messages (Section 3.7.1.2.1.2.11)	783
		40.3.7.1.2.1.2-02	b. For track control messages all messages except Inhibit/Restore Automatic Pointout, Group Suppression, Vertical Velocity Readout, Flight Plan Extrapolation, Fix/Time Readout, Range/Bearing Readout, Range/Bearing/Fix Readout, Continuous Range Readout, and Radar Contact shall be processed.	783
A1.4.8.1	INITIATE POINTOUT	3.7.1.2.1.2.1-00	TRACK CONTROL	368
		3.7.1.2.1.2.1-15	f. Initiate Pointout: Flight Identification, Sector or Facility.	369
		3.7.1.2.1.2.1-16	f. Initiate Pointout: This message shall be used to request the display of a Full Data Block at another sector's or Facility's Situation Display.	369
		40.3.7.1.2.1.2-00	CONTROLLER INPUT LANGUAGE PROCESSING	783
		40.3.7.1.2.1.2-01	a. The TAAS shall meet the requirements of Section 3.7.1.2.1.2 and subordinate sections with the following exceptions: Entry of the following message categories is not required: 1) Metering Parameter Changes (Section 3.7.1.2.1.2.5) and 2) Automation Processing Messages (Section 3.7.1.2.1.2.11)	783
		40.3.7.1.2.1.2-02	b. For track control messages all messages except Inhibit/Restore Automatic Pointout, Group Suppression, Vertical Velocity Readout, Flight Plan Extrapolation, Fix/Time Readout, Range/Bearing Readout, Range/Bearing/Fix Readout, Continuous Range Readout, and Radar Contact shall be processed.	783
A1.4.8.3	FORCE FLIGHT DATA ENTRY TO ANOTHER CONTROLLER	3.7.1.2.1.2.2-00	FLIGHT DATA CHANGES	373
		3.7.1.2.1.2.2-40	o. FDE Point Out: Flight Identification, (Sector Posting Number), Sector Number.	376

Task Number	Task Statement	Paragraph Number	Requirement	Page No.
A1.4.8.3 (cont'd)	FORCE FLIGHT DATA ENTRY TO ANOTHER CONTROLLER	3.7.1.2.1.2.2-41	o. FDE Point Out This message shall be used to force an FDE displayed at the entering sector to the Flight Data Area at another sector.	376
		40.3.7.1.2.1.2-00	CONTROLLER INPUT LANGUAGE PROCESSING	783
		40.3.7.1.2.1.2-01	a. The TAAS shall meet the requirements of Section 3.7.1.2.1.2 and subordinate sections with the following exceptions: Entry of the following message categories is not required: 1) Metering Parameter Changes (Section 3.7.1.2.1.2.5) and 2) Automation Processing Messages (Section 3.7.1.2.1.2.11)	783
		40.3.7.1.2.1.2-07	c. For Flight Data Changes (Section 3.7.1.2.1.2.2) all messages shall be processed by TAAS except Emergency Airport, Implement Reroute, Implement Absorption Maneuver, Create/Delete Route, and Repetitive Route Amendment.	784
A1.4.8.4	RECEIVE ACCEPTANCE OF POINTOUT	3.7.1.2.1.1.1-00	SITUATION DISPLAY	325
		3.7.1.2.1.1.1.3-00	TARGET AND TRACK DATA AND SYMBOLOGY	330
		3.7.1.2.1.1.1.3-44	The information conveyed in the track position symbol and FDB shall be adaptable from the following set of data. Callsign, Mode C Altitude or Pilot Reported Altitude and indication of Pilot Reported Altitude, Handoff Status/Indicator, Aircraft Type, Assigned Altitude or Interim ... (See SLS).	332
		3.7.1.2.1.1.1.3-51	bg. The initiating sector's/position's pointout indicator shall denote the receiving sector's/position's identification and either an acceptance or a rejection.	333
		3.7.1.2.1.2.1-00	TRACK CONTROL	368
		3.7.1.2.1.2.1-65	s. Pointout Accept/Reject: An appropriate indication shall be made to the sending position.	372
		40.3.7.1.2.1.1.1-00	SITUATION DISPLAY	779
		40.3.7.1.2.1.1.1-01	The requirements of Section 3.7.1.2.1.1.1 and subordinate sections shall apply to TAAS except that Graphic Weather from RWP, Conflict Resolution and MSAW Advisories, Route Display, and Flight Plan Conflict/Trial Plan Display are not required.	779
		40.3.7.1.2.1.2-00	CONTROLLER INPUT LANGUAGE PROCESSING	783

Task Number	Task Statement	Paragraph Number	Requirement	Page No.
A1.4.8.4 (cont'd)	RECEIVE ACCEPTANCE OF POINTOUT	40.3.7.1.2.1.2-01	a. The TAAS shall meet the requirements of Section 3.7.1.2.1.2 and subordinate sections with the following exceptions: Entry of the following message categories is not required: 1) Metering Parameter Changes (Section 3.7.1.2.1.2.5) and 2) Automation Processing Messages (Section 3.7.1.2.1.2.11)	783
		40.3.7.1.2.1.2-02	b. For track control messages all messages except Inhibit/Restore Automatic Pointout, Group Suppression, Vertical Velocity Readout, Flight Plan Extrapolation, Fix/Time Readout, Range/Bearing Readout, Range/Bearing/Fix Readout, Continuous Range Readout, and Radar Contact shall be processed.	783
A1.4.8.5	RECEIVE REJECTION OF POINTOUT	3.7.1.2.1.1.1-00	SITUATION DISPLAY	323
		3.7.1.2.1.1.1.3-00	TARGET AND TRACK DATA AND SYMBOLOGY	330
		3.7.1.2.1.1.1.3-44	The information conveyed in the track position symbol and FDB shall be adaptable from the following set of data: Callsign, Mode C Altitude or Pilot Reported Altitude and indication of Pilot Reported Altitude, Handoff Status/Indicator, Aircraft Type, Assigned Altitude or Interim ... (See SLS).	332
		3.7.1.2.1.1.1.3-51	bg. The initiating sector's/position's pointout indicator shall denote the receiving sector's/position's identification and either an accceptance or a rejection.	333
		3.7.1.2.1.2.1-00	TRACK CONTROL	368
		3.7.1.2.1.2.1-65	s. Pointout Accept/Reject: An appropriate indication shall be made to the sending position.	372
		40.3.7.1.2.1.1.1-00	SITUATION DISPLAY	779
		40.3.7.1.2.1.1.1-01	The requirements of Section 3.7.1.2.1.1.1 and subordinate sections shall apply to TAAS except that Graphic Weather from RWP, Conflict Resolution and MSAW Advisories, Route Display, and Flight Plan Conflict/Trial Plan Display are not required.	779
		40.3.7.1.2.1.2-00	CONTROLLER INPUT LANGUAGE PROCESSING	783
		40.3.7.1.2.1.2-01	a. The TAAS shall meet the requirements of Section 3.7.1.2.1.2 and subordinate sections with the following exceptions: Entry of the following message categories is not required: 1) Metering Parameter Changes (Section 3.7.1.2.1.2.5) and 2) Automation Processing Messages (Section 3.7.1.2.1.2.11)	783

Task Number	Task Statement	Paragraph Number	Requirement	Page No.
A1.4.8.5 (cont'd)	RECEIVE REJECTION OF POINTOUT	40.3.7.1.2.1.2-02	b. For track control messages all messages except Inhibit/Restore Automatic Pointout, Group Suppression, Vertical Velocity Readout, Flight Plan Extrapolation, Fix/Time Readout, Range/Bearing Readout, Range/Bearing/Fix Readout, Continuous Range Readout, and Radar Contact shall be processed.	783
A1.4.9.1	RECEIVE POINTOUT	3.7.1.2.1.1.1-00	SITUATION DISPLAY	323
		3.7.1.2.1.1.1.3-00	TARGET AND TRACK DATA AND SYMBOLOGY	330
		3.7.1.2.1.1.1.3-44	The information conveyed in the track position symbol and FDB shall be adaptable from the following set of data: Callsign, Mode C Altitude or Pilot Reported Altitude and indication of Pilot Reported Altitude, Handoff Status/Indicator, Aircraft Type, Assigned Altitude or Interim ... (See SLS).	332
		3.7.1.2.1.1.1.3-50	bf. The receiving sector's/position's pointout indicator shall denote the receiving sector's/position's identification.	333
		3.7.1.2.1.1.1.3-60	cd. The following emergency and alert conditions shall be coded in the FDB: Initiation or receipt of a pointout.	334
		3.7.1.2.1.1.1.3-72	db. Some of the conditions that shall result in the display of a FDB for a track are: Aircraft is in handoff or pointout status to this sector.	334
		40.3.7.1.2.1.1.1-00	SITUATION DISPLAY	779
		40.3.7.1.2.1.1.1-01	The requirements of Section 3.7.1.2.1.1.1 and subordinate sections shall apply to TAAS except that Graphic Weather from RWP, Conflict Resolution and MSAW Advisories, Route Display, and Flight Plan Conflict/Trial Plan Display are not required.	779
A1.4.9.2	ACCEPT POINTOUT	3.7.1.2.1.2.1-00	TRACK CONTROL	368
		3.7.1.2.1.2.1-63	s. Pointout Accept/Reject: Flight Identification, (Reject Indicator).	372
		3.7.1.2.1.2.1-64	s. Pointout Accept/Reject: This message shall provide the means for the controller to accept or reject a Data Block Pointout.	372
		40.3.7.1.2.1.2-00	CONTROLLER INPUT LANGUAGE PROCESSING	783
		40.3.7.1.2.1.2-01	a. The TAAS shall meet the requirements of Section 3.7.1.2.1.2 and subordinate sections with the following exceptions: Entry of the following message categories is not required: 1) Metering Parameter Changes (Section 3.7.1.2.1.2.5) and 2) Automation Processing Messages (Section 3.7.1.2.1.2.11)	783

Task Number	Task Statement	Paragraph Number	Requirement	Page No.
A1.4.9.2 (cont'd)	ACCEPT POINTOUT	40.3.7.1.2.1.2-02	b. For track control messages all messages except Inhibit/Restore Automatic Pointout, Group Suppression, Vertical Velocity Readout, Flight Plan Extrapolation, Fix/Time Readout, Range/Bearing Readout, Range/Bearing/Fix Readout, Continuous Range Readout, and Radar Contact shall be processed.	783
A1.4.9.3	DENY POINTOUT	3.7.1.2.1.2.1-00	TRACK CONTROL	368
		3.7.1.2.1.2.1-63	s. Pointout Accept/Reject: Flight Identification, (Reject Indicator).	372
		3.7.1.2.1.2.1-64	s. Pointout Accept/Reject: This message shall provide the means for the controller to accept or reject a Data Block Pointout.	372
		40.3.7.1.2.1.2-00	CONTROLLER INPUT LANGUAGE PROCESSING	783
		40.3.7.1.2.1.2-01	a. The TAAS shall meet the requirements of Section 3.7.1.2.1.2 and subordinate sections with the following exceptions: Entry of the following message categories is not required: 1) Metering Parameter Changes (Section 3.7.1.2.1.2.5) and 2) Automation Processing Messages (Section 3.7.1.2.1.2.11)	783
		40.3.7.1.2.1.2-02	b. For track control messages all messages except Inhibit/Restore Automatic Pointout, Group Suppression, Vertical Velocity Readout, Flight Plan Extrapolation, Fix/Time Readout, Range/Bearing Readout, Range/Bearing/Fix Readout, Continuous Range Readout, and Radar Contact shall be processed.	783
A1.4.9.4	SUPPRESS FULL DATA BLOCK AFTER POINTOUT	3.7.1.2.1.2.1-00	TRACK CONTROL	368
		3.7.1.2.1.2.1-13	e. Force Data Block: Flight Identification.	369
		3.7.1.2.1.2.1-14	e. Force Data Block: This message shall be used to cause or remove the forcing of the display of a Full Data Block for an individual aircraft on a Situation Display.	369
		40.3.7.1.2.1.2-00	CONTROLLER INPUT LANGUAGE PROCESSING	783
		40.3.7.1.2.1.2-01	a. The TAAS shall meet the requirements of Section 3.7.1.2.1.2 and subordinate sections with the following exceptions: Entry of the following message categories is not required: 1) Metering Parameter Changes (Section 3.7.1.2.1.2.5) and 2) Automation Processing Messages (Section 3.7.1.2.1.2.11)	783

Task to Requirement Traceability Matrix

Task Number	Task Statement	Paragraph Number	Requirement	Page No.
A1.4.9.4 (cont'd)	SUPPRESS FULL DATA BLOCK AFTER POINTOUT	40.3.7.1.2.1.2-02	b. For track control messages all messages except Inhibit/Restore Automatic Pointout, Group Suppression, Vertical Velocity Readout, Flight Plan Extrapolation, Fix/Time Readout, Range/Bearing Readout, Range/Bearing/Fix Readout, Continuous Range Readout, and Radar Contact shall be processed.	783
A1.4.9.5	DETERMINE RESPONSE TO POINTOUT	3.7.1.2.1.1.1-00	SITUATION DISPLAY	323
		3.7.1.2.1.1.1.2-00	GEOGRAPHIC MAP DATA	323
		3.7.1.2.1.1.1.3-00	TARGET AND TRACK DATA AND SYMBOLOGY	330
		40.3.7.1.2.1.1.1-00	SITUATION DISPLAY	779
		40.3.7.1.2.1.1.1-01	The requirements of Section 3.7.1.2.1.1.1 and subordinate sections shall apply to TAAS except that Graphic Weather from RWP, Conflict Resolution and MSAW Advisories, Route Display, and Flight Plan Conflict/Trial Plan Display are not required.	779
		40.3.7.1.2.1.1.2-00	FLIGHT DATA DISPLAY	779
A1.4.10.2	APPROVE CLEARANCE REQUEST	3.7.1.1.3.7.1-00	ATC MAIL MESSAGE PROCESSING	299
		3.7.1.1.3.7.1-01	The ACCC shall provide the capability to communicate via electronic media.	299
		40.3.7.1.1.3.7.1-00	ATC MAIL PROCESSING	776
		40.3.7.1.1.3.7.1-01	The requirements of Section 3.7.1.1.3.7.1 shall apply to TAAS.	776
A1.4.10.6	ISSUE CLEARANCE THROUGH ATCT/FSS FOR RELAY TO PILOT	3.7.1.1.3.7.1-00	ATC MAIL MESSAGE PROCESSING	299
		3.7.1.1.3.7.1-01	The ACCC shall provide the capability to communicate via electronic media.	299
		40.3.7.1.1.3.7.1-00	ATC MAIL PROCESSING	776
		40.3.7.1.1.3.7.1-01	The requirements of Section 3.7.1.1.3.7.1 shall apply to TAAS.	776
A1.4.10.7	VERIFY AIRCRAFT COMPLIANCE WITH CLEARANCE	3.7.1.2.1.1.1-00	SITUATION DISPLAY	323
		3.7.1.2.1.1.1.2-00	GEOGRAPHIC MAP DATA	323
		3.7.1.2.1.1.1.3-00	TARGET AND TRACK DATA AND SYMBOLOGY	330
		3.7.1.2.1.1.1.3-17	The controller shall be able to select and deselect the display of each category of target or track data and up to five previous positions of history data.	351

Task Number	Task Statement	Paragraph Number	Requirement	Page No.
A1.4.10./ (cont'd)	VERIFY AIRCRAFT COMPLIANCE WITH CLEARANCE	3.7.1.2.1.1.1.3-00	Movement of the displayed data block shall be minimal on a scan-to-scan basis.	335
		3.7.1.2.1.1.1.4-00	TRACK VECTOR	336
		3.7.1.2.1.1.1.4-01	The Situation Display shall contain a velocity/distance vector associated with each track.	336
		40.3.7.1.2.1.1.1-00	SITUATION DISPLAY	779
		40.3.7.1.2.1.1.1-01	The requirements of Section 3.7.1.2.1.1.1 and subordinate sections shall apply to TAAS except that Graphic Weather from RWP, Conflict Resolution and MSAW Advisories, Route Display, and Flight Plan Conflict/Trial Plan Display are not required.	779
A1.4.10.9	DENY CLEARANCE REQUEST	3.7.1.1.3.7.1-00	ATC MAIL MESSAGE PROCESSING	299
		3.7.1.1.3.7.1-01	The ACCC shall provide the capability to communicate via electronic media.	299
		40.3.7.1.1.3.7.1-00	ATC MAIL PROCESSING	776
		40.3.7.1.1.3.7.1-01	The requirements of Section 3.7.1.1.3.7.1 shall apply to TAAS.	776
A1.4.10.10	SUGGEST ALTERNATIVE TO CLEARANCE REQUEST FROM CONTROLLER	3.7.1.1.3.7.1-00	ATC MAIL MESSAGE PROCESSING	299
		3.7.1.1.3.7.1-01	The ACCC shall provide the capability to communicate via electronic media.	299
		40.3.7.1.1.3.7.1-00	ATC MAIL PROCESSING	776
		40.3.7.1.1.3.7.1-01	The requirements of Section 3.7.1.1.3.7.1 shall apply to TAAS.	776
A1.4.12.1	INHIBIT AUTOMATIC HANDOFF FOR ALL TRACKS OR FOR DESIGNATED TRACK	3.7.1.2.1.2.1-00	TRACK CONTROL	368
		3.7.1.2.1.2.1-11	d. Enable/Inhibit Automatic Handoff: (Flight Identification), (Sector or Facility).	368
		3.7.1.2.1.2.1-12	d. Enable/Inhibit Automatic Handoff: This message shall provide the capability for enabling or inhibiting the automatic handoff initiation function for the entering sector for a specified aircraft or for all flights to be handed off to a specified sector or facility.	369
		40.3.7.1.1.3.2-00	AUTOMATIC TRACKING CAPABILITY	769

Task Number	Task Statement	Paragraph Number	Requirement	Page No.
A1.4.12.1 (cont'd)	INHIBIT AUTOMATIC HANDOFF FOR ALL TRACKS OR FOR DESIGNATED TRACK	40.3.7.1.1.3.2-13	e. The requirements of Section 3.7.1.1.3.2.8.2 shall be replaced as follows:	770
		40.3.7.1.1.3.2-22	e.2. The automatic handoff function shall generate for display an appropriate handoff alert indication to the sector position which is controlling the track when one of the following conditions exist: When the automatic handoff function is inhibited for a track.	770
		40.3.7.1.1.3.2-27	e. It shall be possible to inhibit the automatic handoff initiation capability by controller action or through adaptation for all tracks entering a designated facility, or for all tracks exiting a designated sector or the facility.	771
		40.3.7.1.1.3.2-28	e. The controller shall also be able to inhibit automatic handoff initiation on a designated track.	771
		40.3.7.1.2.1.2-00	CONTROLLER INPUT LANGUAGE PROCESSING	783
		40.3.7.1.2.1.2-01	a. The TAAS shall meet the requirements of Section 3.7.1.2.1.2 and subordinate sections with the following exceptions: Entry of the following message categories is not required: 1) Metering Parameter Changes (Section 3.7.1.2.1.2.5) and 2) Automation Processing Messages (Section 3.7.1.2.1.2.11)	783
		40.3.7.1.2.1.2-02	b. For track control messages all messages except Inhibit/Restore Automatic Pointout, Group Suppression, Vertical Velocity Readout, Flight Plan Extrapolation, Fix/Time Readout, Range/Bearing Readout, Range/Bearing/Fix Readout, Continuous Range Readout, and Radar Contact shall be processed.	783
A1.4.12.2	RESTORE AUTOMATIC HANDOFF FOR ALL TRACKS OR FOR DESIGNATED TRACK	3.7.1.2.1.2.1-00	TRACK CONTROL	368
		3.7.1.2.1.2.1-11	d. Enable/Inhibit Automatic Handoff: (Flight Identification), (Sector or Facility).	368
		3.7.1.2.1.2.1-12	d. Enable/Inhibit Automatic Handoff: This message shall provide the capability for enabling or inhibiting the automatic handoff initiation function for the entering sector for a specified aircraft or for all flights to be handed off to a specified sector or facility.	369
		40.3.7.1.2.1.2-00	CONTROLLER INPUT LANGUAGE PROCESSING	783

Task Number	Task Statement	Paragraph Number	Requirement	Page No.
A1.4.12.2 (cont'd)	RESTORE AUTOMATIC HANDOFF FOR ALL TRACKS OR FOR DESIGNATED TRACK	40.3.7.1.2.1.2-01	a. The TAAS shall meet the requirements of Section 3.7.1.2.1.2 and subordinate sections with the following exceptions: Entry of the following message categories is not required: 1) Metering Parameter Changes (Section 3.7.1.2.1.2.5) and 2) Automation Processing Messages (Section 3.7.1.2.1.2.11)	783
		40.3.7.1.2.1.2-02	b. For track control messages all messages except Inhibit/Restore Automatic Pointout, Group Suppression, Vertical Velocity Readout, Flight Plan Extrapolation, Fix/Time Readout, Range/Bearing Readout, Range/Bearing/Fix Readout, Continuous Range Readout, and Radar Contact shall be processed.	783
A1.4.13.4	DETERMINE FREQUENCY IN USE BY RECEIVING SECTOR	3.7.1.2.1.1.8-00	SYSTEM STATUS DATA DISPLAY	359
		3.7.1.2.1.1.8-02	The following data categories shall be included: Communication Channel Assignments, Radio Frequencies, Radio Equipment Outages and Repair Schedule, Radar Equipment Outages and Repair Schedule, NAVAID Outages and Repair Schedule, NAVAID Maintenance Schedule, Sectorization Plan ... (See SLS).	359
		3.7.1.2.1.1.9-00	STATIC INFORMATION DISPLAY	360
		3.7.1.2.1.1.9-04	b. The following (textual) data shall be displayed: Airmans Information Manual, "Air Traffic Control" FAA Order 7110.65, Other Static Display Categories (Standard Operating Procedures, Letters of Agreement, Position Check Lists, NAVAID/Sector Frequencies), "Oceanic ... (See SLS).	360
		3.7.1.2.1.1.9-05	The capability shall be provided to display data items selected from the above list.	360
		40.3.7.1.2.1.1.7-00	SYSTEM STATUS DATA DISPLAY	783
		40.3.7.1.2.1.1.7-01	The requirements of Section 3.7.1.2.1.1.8 shall apply to TAAS except that the source of data shall be supervisor, area manager, controller manual entry or automatically-detected failures of TAAS resources, and that there is no requirement for additional categories defined as part of ... (See SLS).	783
		40.3.7.1.2.1.1.8-00	STATIC INFORMATION DISPLAY	783
		40.3.7.1.2.1.1.8-01	The requirements of Section 3.7.1.2.1.1.9 shall apply to TAAS.	783
A1.4.13.7	ISSUE ALTIMETER SETTING	3.7.1.2.1.1.7-00	AIRPORT ENVIRONMENTAL DATA DISPLAY	358
		3.7.1.2.1.1.7-01	This logical display shall contain airport information and data from environmental sensors.	358

Task to Requirement Traceability Matrix

Task Number	Task Statement	Paragraph Number	Requirement	Page No.
A1.4.13.7 (cont'd)	ISSUE ALTIMETER SETTING	3.7.1.2.1.1.7-02	a. The following types of data shall be included: Barometric pressure (DASI).	358
		40.3.7.1.2.1.1.6-00	AIRPORT ENVIRONMENTAL DATA DISPLAY	783
		40.3.7.1.2.1.1.6-01	The requirements of Section 3.7.1.2.1.1.7 shall apply to TAAS except that the source of data shall be TCCC or manual entry from supervisor or controller position.	783
A1.4.13.8	VERIFY AIRCRAFT ALTITUDE	3.7.1.2.1.1.1-00	SITUATION DISPLAY	323
		3.7.1.2.1.1.1.3-00	TARGET AND TRACK DATA AND SYMBOLOGY	330
		3.7.1.2.1.1.1.3-38	The above target/track data shall be updated at the scan rate of the radar(s) from which the reports are received.	332
		3.7.1.2.1.1.2.1-00	FLIGHT DATA FIELDS	341
		3.7.1.2.1.1.2.1-03	Table 3.7-1 lists the Flight Plan Data fields with the maximum number of characters in the field. (See SLS).	341
		40.3.7.1.2.1.1.1-00	SITUATION DISPLAY	779
		40.3.7.1.2.1.1.1-01	The requirements of Section 3.7.1.2.1.1.1 and subordinate sections shall apply to TAAS except that Graphic Weather from RWP, Conflict Resolution and MSAW Advisories, Route Display, and Flight Plan Conflict/Trial Plan Display are not required.	779
		40.3.7.1.2.1.1.2.1-00	FLIGHT DATA FIELDS	781
		40.3.7.1.2.1.1.2.1-01	a. The requirements of Section 3.7.1.2.1.1.2.1 shall apply to TAAS with the following exceptions: The Next Posted Fix, ETA at Next Posted Fix, Next Sector/Next Facility, Lateral Nonconformance Indicator, Metering/Traffic Management Advisory, and Metering/Traffic Management Advisory ... (See SLS).	781
A1.4.14.1	OBSERVE TARGET ENTERING RADAR COVERAGE	3.7.1.2.1.1.1-00	SITUATION DISPLAY	323
		3.7.1.2.1.1.1.3-00	TARGET AND TRACK DATA AND SYMBOLOGY	330
		3.7.1.2.1.1.1.3-01	The Situation Display shall contain selected information for the targets and tracks in the geographic area of concern.	330
		3.7.1.2.1.1.1.3-12	All targets detected by surveillance sensors (transponder, radar or radar reinforced transponder) shall be available for presentation on the Situation Display.	331
		3.7.1.2.1.1.1.3-13	This data shall be presented as position symbols and data blocks.	331

Task Number	Task Statement	Paragraph Number	Requirement	Page No.
A1.4.14 1 (cont'd)	OBSERVE TARGET ENTERING RADAR COVERAGE	3.7.1.2.1.1.1.3-16	The Situation Display shall contain current position data for various categories of targets and tracks and position history data for targets.	331
		3.7.1.2.1.1.1.3-20	Track position symbols shall be placed at the target report position if a target report correlated during the most recent radar scan; otherwise, the track position symbol shall be at the predicted track position.	331
		3.7.1.2.1.1.1.3-21	Target position symbols shall be placed at the radar reported position and shall not be the same symbols as used to denote track positions.	331
		3.7.1.2.1.1.1.3-23	a. Target position symbols shall be coded to denote whether the target is primary or beacon.	331
		3.7.1.2.1.1.1.3-24	a. Target position symbols shall distinguish between the classes of primary targets and categories of beacon targets.	331
		3.7.1.2.1.1.1.3-26	b. The ident indicator shall be coded within the target position symbol.	331
		3.7.1.2.1.1.1.3-49	The Situation Display shall also contain a FDB associated with certain tracks within the geographic area of concern.	332
		3.7.1.2.1.1.1.3-98	The Situation Display shall include Limited Data Blocks for all tracks which pass a controller specified filter and which do not have an associated Full Data Block or Partial Data Block.	336
		40.3.7.1.2.1.1.1-00	SITUATION DISPLAY	779
		40.3.7.1.2.1.1.1-01	The requirements of Section 3.7.1.2.1.1.1 and subordinate sections shall apply to TAAS except that Graphic Weather from RWP, Conflict Resolution and MSAW Advisories, Route Display, and Flight Plan Conflict/Trial Plan Display are not required.	779
A1.4.14.3	CONDUCT RADAR IDENTIFICATION PROCEDURES	3.7.1.2.1.1.1-00	SITUATION DISPLAY	323
		3.7.1.2.1.1.1.2-00	GEOGRAPHIC MAP DATA	323
		3.7.1.2.1.1.1.2-02	Map data shall be divided into many categories.	324
		3.7.1.2.1.1.1.2-03	These categories shall include, but not be limited to, several groups of fixes, several groups of airways, sector boundaries grouped by altitude, special use airspace boundaries, airports, obstructions, fixes, minimum vector altitudes (MVA), military routes, holding pattern ... (See SLS).	324

Task Number	Task Statement	Paragraph Number	Requirement	Page No.
A1.4.14.3 (cont'd)	CONDUCT RADAR IDENTIFICATION PROCEDURES	3.7.1.2.1.1.1.3-00	TARGET AND TRACK DATA AND SYMBOLOGY	330
		3.7.1.2.1.1.1.3-12	All targets detected by surveilance sensors (transponder, radar or radar reinforced transponder) shall be available for presentation on the Situation Display.	331
		3.7.1.2.1.1.1.3-13	This data shall be presented as position symbols and data blocks.	331
		3.7.1.2.1.1.1.3-16	The Situation Display shall contain current position data for various categories of targets and tracks and position history data for targets.	331
		3.7.1.2.1.1.1.3-20	Track position symbols shall be placed at the target report position if a target report correlated during the most recent radar scan; otherwise, the track position symbol shall be at the predicted track position.	331
		3.7.1.2.1.1.1.3-21	Target position symbols shall be placed at the radar reported position and shall not be the same symbols as used to denote track positions.	331
		3.7.1.2.1.1.1.3-23	a. Target position symbols shall be coded to denote whether the target is primary or beacon.	331
		3.7.1.2.1.1.1.3-24	a. Target position symbols shall distinguish between the classes of primary targets and categories of beacon targets.	331
		3.7.1.2.1.1.1.3-26	b. The ident indicator shall be coded within the target position symbol.	331
		3.7.1.2.1.1.1.3-44	The information conveyed in the track position symbol and FDB shall be adaptable from the following set of data: Callsign, Mode C Altitude or Pilot Reported Altitude and indication of Pilot Reported Altitude, Handoff Status/Indicator, Aircraft Type, Assigned Altitude or Interim ... (See SLS).	332
		3.7.1.2.1.1.1.3-99	The LDB shall include the following information, as available: Mode 3/A Code, Mode S indicator/Mode S data link indicator (whichever one is available), Mode C altitude, Ground speed, Aircraft special condition (e.g., emergency/hijack, etc.).	336
		40.3.7.1.2.1.1.1-00	SITUATION DISPLAY	779
		40.3.7.1.2.1.1.1-01	The requirements of Section 3.7.1.2.1.1.1 and subordinate sections shall apply to TAAS except that Graphic Weather from RAP, Conflict Resolution and MSAW Advisories, Route Display, and Flight Plan Conflict/Trial Plan Display are not required.	779

Task Number	Task Statement	Paragraph Number	Requirement	Page No.
A1.5.1.3	RECEIVE WEATHER BRIEFING FROM METEOROLOGIST	3.7.1.1.3.7.1-00	ATC MAIL MESSAGE PROCESSING	299
		3.7.1.1.3.7.1-01	The ACCC shall provide the capability to communicate via electronic media.	299
		40.3.7.1.1.3.7.1-00	ATC MAIL PROCESSING	776
		40.3.7.1.1.3.7.1-01	The requirements of Section 3.7.1.1.3.7 1 shall apply to TAAS.	776
A1.5.1.9	ISSUE WEATHER/ ADVISORY/ UPDATE TO PILOT/ ANOTHER CONTROLLER	3.7.1.1.3.7.1-00	ATC MAIL MESSAGE PROCESSING	299
		3.7.1.1.3.7.1-01	The ACCC shall provide the capability to communicate via electronic media.	299
		40.3.7.1.1.3.7.1-00	ATC MAIL PROCESSING	776
		40.3.7.1.1.3.7.1-01	The requirements of Section 3.7.1.1.3.7.1 shall apply to TAAS.	776
A1.5.1.10	INFORM SUPERVISOR/ TMC OF WEATHER IMPACT ON ROUTES/ FLOW	3.7.1.1.3.7.1-00	ATC MAIL MESSAGE PROCESSING	299
		3.7.1.1.3.7.1-01	The ACCC shall provide the capability to communicate via electronic media.	299
		40.3.7.1.1.3.7.1-00	ATC MAIL PROCESSING	776
		40.3.7.1.1.3.7.1-01	The requirements of Section 3.7.1.1.3.7.1 shall apply to TAAS.	776
A1.5.1.12	RECEIVE WEATHER ADVISORY FROM ANOTHER CONTROLLER/ SUPERVISOR/ METEOROLOGIST	3.7.1.1.3.7.1-00	ATC MAIL MESSAGE PROCESSING	299
		3.7.1.1.3.7.1-01	The ACCC shall provide the capability to communicate via electronic media.	299
		40.3.7.1.1.3.7.1-00	ATC MAIL PROCESSING	776
		40.3.7.1.1.3.7.1-01	The requirements of Section 3 7.1.1.3.7.1 shall apply to TAAS.	776
A1.5.1.13	RECEIVE CONTROLLER REQUEST FOR WEATHER INFORMATION	3.7.1.1.3.7.1-00	ATC MAIL MESSAGE PROCESSING	299
		3.7.1.1.3.7.1-01	The ACCC shall provide the capability to communicate via electronic media.	299
		40.3.7.1.1.3.7.1-00	ATC MAIL PROCESSING	776
		40.3.7.1.1.3.7.1-01	The requirements of Section 3.7.1.1.3.7.1 shall apply to TAAS.	776

Task to Requirement Traceability Matrix

Task Number	Task Statement	Paragraph Number	Requirement	Page No.
A1.5.1.14	FORWARD WEATHER INFORMATION TO SUPERVISOR/ METECROLOGIST	3.7.1.1.3.7.1-00	ATC MAIL MESSAGE PROCESSING	299
		3.7.1.1.3.7.1-01	The ACCC shall provide the capability to communicate via electronic media.	299
		40.3.7.1.1.3.7 1-00	ATC MAIL PROCESSING	776
		40.3.7.1.1.3.7.1-01	The requirements of Section 3.7.1.1.3.7.1 shall apply to TAAS.	776
A1.5.1.18	REQUEST SUPERVISOR/ TMC TO RELEASE AIRSPACE	3.7.1.1.3.7.1-00	ATC MAIL MESSAGE PROCESSING	299
		3.7.1.1.3.7.1-01	The ACCC shall provide the capability to communicate via electronic media.	299
		40.3.7.1.1.3.7.1-00	ATC MAIL PROCESSING	776
		40.3.7.1.1.3.7.1-01	The requirements of Section 3.7.1.1.3.7.1 shall apply to TAAS.	776
A1.5.1.22	ENTER AIRPORT ENVIRONMENTAL DATA INTO SYSTEM	3.7.1.1.3.7.2-00	ENVIRONMENTAL AND STATUS DATA PROCESSING	299
		3.7.1.1.3.7.2-02	a. Airport Environmental Data - The ACCC shall accept temperature, centerfield winds (speed and direction), ceiling, visibility, barometric pressure, Runway Visual Range, Low Level Wind Shear Alert, and vortex advisory data.	300
		3.7.1.2.1.1.7-00	AIRPORT ENVIRONMENTAL DATA DISPLAY	358
		3.7.1.2.1.1.7-01	This logical display shall contain airport information and data from environmental sensors.	358
		3.7.1.2.1.2.3-00	AERONAUTICAL AND METEOROLOGICAL DATA CHANGES	379
		3.7.1.2.1.2.3-13	d. Sensor Override: This message shall be used to control the acceptance of data received from an airport environmental sensor.	380
		3.7.1.2.1.2.3-14	d. Sensor Override: When an airport environmental sensor is determined to be faulty, the capability shall be provided to inhibit the data from entering the system data base.	380
		3.7.1.2.1.2.3-16	d. Sensor Override: At the time an inhibit data message is entered, the capability shall be provided to optionally input a fallback value for the sensor.	380

Task Number	Task Statement	Paragraph Number	Requirement	Page No.
A1.5.1.22 (cont'd)	ENTER AIRPORT ENVIRONMENTAL DATA INTO SYSTEM	3.7.1.2.1.2.3-18	d. Sensor Override: If a fallback value is not provided at the time an inhibit data message is entered, the capability shall be provided to enter a value at a later time provided a permit data action was not taken during the interim time period.	388
		3.7.1.2.1.2.3-19	d. Sensor Override: When this fallback value is provided, it shall be displayed in lieu of the data sent by the sensor.	388
		40.3.7.1.1.3.7.2-00	ENVIRONMENTAL AND STATUS DATA PROCESSING	776
		40.3.7.1.1.3.7.2-01	The requirements of Section 3.7.1.1.3.7.2 shall apply to TAAS except that the source of airport environmental data and airport equipment status data shall be TCCC or manual input.	776
		40.3.7.1.2.1.1.6-00	AIRPORT ENVIRONMENTAL DATA DISPLAY	783
		40.3.7.1.2.1.1.6-01	The requirements of Section 3.7.1.2.1.1.7 shall apply to TAAS except that the source of data shall be TCCC or manual entry from supervisor or controller position.	783
		40.3.7.1.2.1.2-00	CONTROLLER INPUT LANGUAGE PROCESSING	783
		40.3.7.1.2.1.2-12	d. For Aeronautical and Meteorological Data Changes (Section 3.7.1.2.1.2.3) only the A&M Data Amendment and Sensor Override shall be processed.	784
A1.5.1.75	OBSERVE DISPLAY OF WEATHER LINE/ INTENSITY/ MOVEMENT	3.7.1.2.1.1.1-00	SITUATION DISPLAY	323
		3.7.1.2.1.1.1.7-00	GRAPHIC WEATHER FROM ATC RADARS	337
		3.7.1.2.1.1.1.7-01	The Situation Display shall, at the controller's option, display graphic weather constructed from data obtained from Air Traffic Control radars.	337
		40.3.7.1.2.1.1.1-00	SITUATION DISPLAY	779
		40.3.7.1.2.1.1.1-01	The requirements of Section 3.7.1.2.1.1.1 and subordinate sections shall apply to TAAS except that Graphic Weather from RWP, Conflict Resolution and MSAW Advisories, Route Display, and Flight Plan Conflict/Trial Plan Display are not required.	779
A1.3.1.78	EVALUATE IMPACT OF NEW A&M CONDITION	3.7.1.2.1.1.7-00	AIRPORT ENVIRONMENTAL DATA DISPLAY	359
		3.7.1.2.1.1.7-01	This logical display shall contain airport information and data from environmental sensors.	358
		40.3.7.1.2.1.1.6-00	AIRPORT ENVIRONMENTAL DATA DISPLAY	783

Task Number	Task Statement	Paragraph Number	Requirement	Page No.
A1.5.2.78 (cont'd)	REVIEW DISPLAYED WEATHER INFORMATION	40.3.7.1.1.3.5-01	The TAAS shall accept and process weather data from ATC radars and display the weather data.	775
		40.3.7.1.1.3.5-02	Weather data shall be presented on the Situation Display.	775
		40.3.7.1.1.3.5-04	The TAAS shall acccept Aeronautical and Meteorological (A&M) Data Change messages from controllers and forward these messages to the Host Computer System for processing.	776
		40.3.7.1.2.1.1.1-00	SITUATION DISPLAY	779
		40.3.7.1.2.1.1.6-00	AIRPORT ENVIRONMENTAL DATA DISPLAY	783
		40.3.7.1.2.1.1.6 01	The requirements of Section 3.7.1.2.1.1.7 shall apply to TAAS except that the source of data shall be TCCC or manual entry from supervisor or controller position.	783
A1.6.1.1	BRIEF RELIEVING CONTROLLER	3.7.1.2.1.1.9-00	STATIC INFORMATION DISPLAY	360
		3.7.1.2.1.1.9-04	b. The following (textual) data shall be displayed: Airmans Information Manual, "Air Traffic Control" FAA Order 7110.65, Other Static Display Categories (Standard Operating Procedures, Letters of Agreement, Position Check Lists, NAVAID/Sector Frequencies), "Oceanic ... (See SLS).	360
		3.7.1.2.1.1.9-05	The capability shall be provided to display data items selected from the above list.	360
		40.3.7.1.2.1.1.8-00	STATIC INFORMATION DISPLAY	783
		40.3.7.1.2.1.1.8-01	The requirements of Section 3.7.1.2.1.1.9 shall apply to TAAS.	783
A1.6.1.2	SIGN OFF CONSOLE	3.7.1.2.1.2.9-00	SIGN ON/SIGN OFF	390
		3.7.1.2.1.2.9-04	b. Sign Off: User Identification, (Operational Responsibility Designator(s)).	390
		3.7.1.2.1.2.9-05	b. Sign Off: This message shall be used to enable a person to sign off an operational position.	390
		40.3.7.1.2.1.2-00	CONTROLLER INPUT LANGUAGE PROCESSING	783
		40.3.7.1.2.1.2-01	a. The TAAS shall meet the requirements of Section 3.7.1.2.1.2 and subordinate sections with the following exceptions: Entry of the following message categories is not required: 1) Metering Parameter Changes (Section 3.7.1.2.1.2.5) and 2) Automation Processing Messages (Section 3.7.1.2.1.2.11)	783
A1.6.1.3	VERIFY COMPLETENESS OF RELIEF BRIEFING RECEIPT	3.7.1.2.1.1.9-00	STATIC INFORMATION DISPLAY	360

Task Number	Task Statement	Paragraph Number	Requirement	Page No.
A1.6.1.3 (cont'd)	VERIFY COMPLETENESS OF RELIEF BRIEFING RECEIPT	3.7.1.2.1.1.9-04	b. The following (textual) data shall be displayed: Airmans Information Manual, "Air Traffic Control" FAA Order 7110.65, Other Static Display Categories (Standard Operating Procedures, Letters of Agreement, Position Check Lists, NAVAID/Sector Frequencies), "Oceanic ... (See SLS).	360
		3.7.1.2.1.1.9-05	The capability shall be provided to display data items selected from the above list.	360
		40.3.7.1.2.1.1.8-00	STATIC INFORMATION DISPLAY	783
		40.3.7.1.2.1.1.8-01	The requirements of Section 3.7.1.2.1.1.9 shall apply to TAAS.	783
A1.6.2.1	REVIEW SYSTEM STATUS TO DETERMINE CURRENCY/ UPDATE SELF	3.7.1.1.3.7.2-00	ENVIRONMENTAL AND STATUS DATA PROCESSING	299
		3.7.1.1.3.7.2-01	The ACCC shall accept, maintain, and disseminate data from TCCCs related to Airport Environmental Data and Equipment Status from selected airports.	239
		3.7.1.1.3.7.2-04	b. Airport Equipment Status Data - The data shall be airport-specific or runway-specific , as appropriate, and shall include Instrument Landing and Airport Lighting Systems.	300
		3.7.1.2.1.1.8-00	SYSTEM STATUS DATA DISPLAY	359
		3.7.1.2.1.1.8-01	This logical display shall contain dynamic information regarding the status of ATC equipment, operational areas, airports, etc.	359
		3.7.1.2.1.1.8-02	The following data categories shall be included: Communication Channel Assignments, Radio Frequencies, Radio Equipment Outages and Repair Schedule, Radar Equipment Outages and Repair Schedule, NAVAID Outages and Repair Schedule, NAVAID Maintenance Schedule, Sectorization Plan ... (See SLS).	359
		3.7.1.2.1.1.8-03	The controller shall have the capability to select the categories of data to be displayed.	359
		3.7.1.2.1.1.8-04	All displayed information shall be updated automatically when changes are reported.	359
		40.3.7.1.1.3.7.2-00	ENVIRONMENTAL AND STATUS DATA PROCESSING	775
		40.3.7.1.1.3.7.2-01	The requirements of Section 3.7.1.1.3.7.2 shall apply to TAAS except that the source of airport environmental data and airport equipment status data shall be TCCC or manual input.	776
		40.3.7.1.2.1.1.7-00	SYSTEM STATUS DATA DISPLAY	783

Task to Requirement Traceability Matrix

Task Number	Task Statement	Paragraph Number	Requirement	Page No.
A1.6.2.1 (cont'd)	REVIEW SYSTEM STATUS TO DETERMINE CURRENCY/ UPDATE SELF	40.3.7.1.2.1.1.7-01	The requirements of Section 3.7.1.2.1.1.8 shall apply to TAAS except that the source of data shall be supervisor, area manager, controller manual entry or automatically-detected failures of TAAS resources, and that there is no requirement for additional categories defined as part of ... (See SLS).	783
A1.6.2.3	VERIFY THAT ALL REQUIRED PARAMETERS ARE IN PROPER LOCATION	3.7.1.2.1.1-00	CONTROLLER DISPLAY LANGUAGE	320
		40.3.7.1.2.1.1-00	CONTROLLER DISPLAY LANGUAGE	779
		40.3.7.1.2.1.1-01	The requirements of Section 3.7.1.2.1.1 excluding subordinate sections shall apply to TAAS except for the reference to Section 3.7.1.2.1.1.12.1 which does not apply.	779
A1.6.2.4	SIGN ON AT DESIGNATED CONSOLE	3.7.1.1.3.7.3-00	SIGN ON AND SIGN OFF PROCESSING	300
		3.7.1.1.3.7.3-01	The capability shall be provided for the ACCC to maintain a sign on/sign off record for each operational position.	300
		3.7.1.1.3.7.3-02	This record shall include the user's unique identification, time of sign on, time of sign off, and the user's operational responsibility (e.g., R, D, trainee).	300
		3.7.1.1.3.7.3-03	It shall be possible to have multiple users signed on to a single operational position and to have multiple users signed on to the same operational responsibility.	300
		3.7.1.1.3.7.3-06	The option shall be provided for the user to invoke his/her display preference set as part of the sign on message.	300
		3.7.1.2.1.2.9-00	SIGN ON/SIGN OFF	390
		3.7.1.2.1.2.9-02	a. Sign On: User Identification, Operational Responsibility Designator(s), (Display Preference Set Identifier).	390
		3.7.1.2.1.2.9-03	a. Sign On: This message shall be used to enable a person to sign on an operational position and to optionally invoke his/her display preference set.	390
		40.3.7.1.1.3.7.3-00	SIGN ON AND SIGN OFF PROCESSING	776
		40.3.7.1.1.3.7.3-01	The requirements of Section 3.7.1.1.3.7.3 shall apply to TAAS.	776
		40.3.7.1.2.1.2-00	CONTROLLER INPUT LANGUAGE PROCESSING	783

Task Number	Task Statement	Paragraph Number	Requirement	Page No.
A1.6.2.4 (cont'd)	SIGN ON AT DESIGNATED CONSOLE	40.3.7.1.2.1.2-01	a. The TAAS shall meet the requirements of Section 3.7.1.2.1.2 and subordinate sections with the following exceptions: Entry of the following message categories is not required: 1) Metering Parameter Changes (Section 3.7.1.2.1.2.5) and 2) Automation Processing Messages (Section 3.7.1.2.1.2.11)	703
A1.6.2.5	ADJUST WORKSTATION TO PERSONAL PREFERENCE	3.7.1.1.3.7.5-00	DISPLAY PREFERENCE SET PROCESSING	300
		3.7.1.1.3.7.5-02	Each display preference set shall be uniquely identifiable and shall contain the location and size of logical display viewports on physical displays, the data item assignments to each brightness control group, the selection of display attributes, and the selection of posting, ordering... (See SLS).	300
		3.7.1.1.3.7.5-03	The capability shall be provided for each controller to modify his/her own preference set.	301
		3.7.1.1.3.7.5-05	The controller shall be able to display and to invoke an entire preference set or portions of a preference set which deal with individual logical displays.	301
		3.7.1.2.1.1-00	CONTROLLER DISPLAY LANGUAGE	320
		3.7.1.2.1.1-06	a. This adaptation shall establish the physical shape and location of the physical display area which is to be allocated to a particular logical display.	320
		3.7.1.2.1.1-07	a. This adaptation shall be dynamically alterable by the controller and shall permit assignment of all eligible logical displays of an operational position to a single physical display.	320
		3.7.1.2.1.1-10	a. The system shall provide the capability for the controller to dynamically designate any logical display or a portion of the situation display which is of interest at a given time and to have that window displayed upon a designated portion of one of the available display surfaces.	320
		3.7.1.2.1.1-12	a. The capability for a controller to dynamically define and delete viewports shall be provided.	321
		3.7.1.2.1.1-14	a. The capability shall be provided for the controller to independently control the display selections associated with each logical display for each viewport of that logical display.	321

Task to Requirement Traceability Matrix

Task Number	Task Statement	Paragraph Number	Requirement	Page No.
A1.6.2.5 (cont'd)	ADJUST WORKSTATION TO PERSONAL PREFERENCE	3.7.1.2.1.1-18	a. Additionally, the capcbility shall be provided to enlarge or contract the size of the physical viewport without changing the scaling of the data (resulting in the expansion or reduction of the geographic area displayed).	321
		3.7.1.2.1.1-59	Control of all displayed data within a Sector Suite shall be provided at each Common Console within that suite.	323
		3.7.1.2.3.1.1.1-00	SYMBOL GENERATION	402
		3.7.1.2.3.1.1.1-03	The Console shall provide for operator selection of symbol sizes.	402
		3.7.1.2.3.1.1.4-00	BRIGHTNESS LEVELS	404
		3.7.1.2.3.1.1.4-02	The brightness of data display from each brightness control group shall be controller adjustable independent of all other groups.	404
		40.3.7.1.1.3.7.4-00	DISPLAY PREFERENCE SET PROCESSING	776
		40.3.7.1.1.3.7.4-01	The requirements of Section 3.7.1.1.3.7.5 shall apply to TAAS.	776
		40.3.7.1.2.1.1-00	CONTROLLER DISPLAY LANGUAGE	779
		40.3.7.1.2.1.1-01	The requirements of Section 3.7.1.2.1.1 excluding subordinate sections shall apply to TAAS except for the reference to Section 3.7.1.2.1.1.12.1 which does not apply.	779
		40.3.7.1.2.1.2-00	CONTROLLER INPUT LANGUAGE PROCESSING	783
		40.3.7.1.2.1.2-01	a. The TAAS shall meet the requirements of Section 3.7.1.2.1.2 and subordinate sections with the following exceptions: Entry of the following message categories is not required: 1) Metering Parameter Changes (Section 3.7.1.2.1.2.5) and 2) Automation Processing Messages (Section 3.7.1.2.1.2.11)	783
		40.3.7.1.2.3-00	DATA ENTRY AND DISPLAY EQUIPMENT	789
		40.3.7.1.2.3-01	a. The requirements of Section 3.7.1.2.3 and subordinate sections shall apply to TAAS except for the following: The references to Sections 3.7.1.2.2 and 3.2.1.1.3.2.2 should be replaced by Sections 40.3.7.1.2.2 and 40.3.2.1.1.3.2.2 respectively.	789
A1.6.2.6	CHECK WORKSTATION FOR PROPER CONFIGURATION, USABILITY, AND SATISFACTORY STATUS	3.7.1.2.1.1-00	CONTROLLER DISPLAY LANGUAGE	320
		40.3.7.1.2.1.1-00	CONTROLLER DISPLAY LANGUAGE	779

Task to Requirement Traceability Matrix

Task Number	Task Statement	Paragraph Number	Requirement	Page No.
A1.6.2.6 (cont'd)	CHECK WORKSTATION FOR PROPER CONFIGURATION, USABILITY, AND SATISFACTORY STATUS	40.3.7.1.2.1.1-01	The requirements of Section 3.7.1.2.1.1 excluding subordinate sections shall apply to TAAS except for the reference to Section 3.7.1.2.1.1.12.1 which does not apply.	779
A1.6.2.7	SET UP WORKSTATION ADAPTATION PARAMETERS	3.7.1.1.3.7.5-00	DISPLAY PREFERENCE SET PROCESSING	300
		3.7.1.1.3.7.5-01	The capability shall be provided for each controller to establish multiple preference sets for each of multiple sectors for a total of 10 preference sets per controller.	300
		3.7.1.1.3.7.5-02	Each display preference set shall be uniquely identifiable and shall contain the location and size of logical display viewports on physical displays, the data item assignments to each brightness control group, the selection of display attributes, and the selection of posting, ordering... (See SLS).	300
		3.7.1.1.3.7.5-03	The capability shall be provided for each controller to modify his/her own preference set.	301
		3.7.1.2.1.2-00	CONTROLLER INPUT LANGUAGE PROCESSING	363
		3.7.1.2.1.2-39	ab. Defaults - The capability for each controller to be able to set and store the particular combination of default parameters which he/she deems most appropriate for his/her daily usage shall be provided.	365
		3.7.1.2.1.2.9-00	SIGN ON/SIGN OFF	390
		3.7.1.2.1.2.9-06	c. Modify Display Preference Set: User Identification, Password, Display Preference Identifier, Data to be Changed.	390
		3.7.1.2.1.2.9-07	c. Modify Display Preference Set: This message shall be used to modify one's own display preference set(s).	391
		40.3.7.1.1.3.7.4-00	DISPLAY PREFERENCE SET PROCESSING	776
		40.3.7.1.1.3.7.4-01	The requirements of Section 3.7.1.1.3.7.5 shall apply to TAAS.	776
		40.3.7.1.2.1.2-00	CONTROLLER INPUT LANGUAGE PROCESSING	783
		40.3.7.1.2.1.2-01	a. The TAAS shall meet the requirements of Section 3.7.1.2.1.2 and subordinate sections with the following exceptions: Entry of the following message categories is not required: 1) Metering Parameter Changes (Section 3.7.1.2.1.2.5) and 2) Automation Processing Messages (Section 3.7.1.2.1.2.11)	783
A1.6.2.8	REVIEW BRIEFING CHECKLIST/ NOTES TO ASSURE COMPLETENESS OF BRIEFING COVERAGE	3.7.1.2.1.1.9-00	STATIC INFORMATION DISPLAY	360

Task to Requirement Traceability Matrix

Task Number	Task Statement	Paragraph Number	Requirement	Page No.
A1.6.2.8 (cont'd)	REVIEW BRIEFING CHECKLIST/ NOTES TO ASSURE COMPLETENESS OF BRIEFING COVERAGE	3.7.1.2.1.1.9-04	b. The following (textual) data shall be displayed: Airmans Information Manual, "Air Traffic Control" FAA Order 7110.65, Other Static Display Categories (Standard Operating Procedures, Letters of Agreement, Position Check Lists, NAVAID/Sector Frequencies), "Oceanic ... (See SLS).	360
		3.7.1.2.1.1.9-05	The capability shall be provided to display data items selected from the above list.	360
		3.7.1.2.1.1.18-00	CONTROLLER NOTEPAD DISPLAY	363
		3.7.1.2.1.1.18-04	These notes shall only be displayed at the entering position and shall remain in the logical display until the controller takes action to delete them.	363
		40.3.7.1.2.1.1.8-00	STATIC INFORMATION DISPLAY	783
		40.3.7.1.2.1.1.8-01	The requirements of Section 3.7.1.2.1.1.9 shall apply to TAAS.	783
		40.3.7.1.2.1.1.11-00	CONTROLLER NOTEPAD DISPLAY	783
		40.3.7.1.2.1.1.11-01	The requirements of Section 3.7.1.2.1.1.18 shall apply to TAAS.	783
A1.6.2.9	REQUEST IMPLEMENTATION OF PROGRAMMED PERSONAL PREFERENCE ADJUSTMENTS	3.7.1.1.3.7.3-00	SIGN ON AND SIGN OFF PROCESSING	300
		3.7.1.1.3.7.3-06	The option shall be provided for the user to invoke his/her display preference set as part of the sign on message.	300
		3.7.1.1.3.7.3-07	If no display preference set is specified at sign on, the existing display configuration shall be retained until controller action is taken to change it.	300
		3.7.1.1.3.7.5-00	DISPLAY PREFERENCE SET PROCESSING	300
		3.7.1.1.3.7.5-04	The capability shall be provided for the controller to display and to invoke a display preference set selectable from all sets established in the ACCC.	301
		3.7.1.1.3.7.5-05	The controller shall be able to display and to invoke an entire preference set or portions of a preference set which deal with individual logical displays.	301
		3.7.1.2.1.2.9-00	SIGN ON/SIGN OFF	390
		3.7.1.2.1.2.9-08	d. Display/Invoke Display Preference Set: Display Preference Identifier, (Logical Display Identifier(s)), (Current Display Selections), (Invoke), (Logical Display Viewport Location(s)).	391

Task Number	Task Statement	Paragraph Number	Requirement	Page No.
A1.6.2.9 (cont'd)	REQUEST IMPLEMENTATION OF PROGRAMMED PERSONAL PREFERENCE ADJUSTMENTS	3.7.1.2.1.2.9-10	d. Display/Invoke Display Preference Set: This message shall be used to display a preference set selectable from all sets established in the ACCC.	391
		3.7.1.2.1.2.9-11	d. Display/Invoke Display Preference Set: The controller shall be able to display an entire preference set or portions of the requested preference set which deal with individual logical displays.	391
		3.7.1.2.1.2.9-12	d. Display/Invoke Display Preference Set: If current display selections are requested, the Display Control selections currently in use at the operational position shall be displayed in addition to the requested display preference set.	391
		3.7.1.2.1.2.9-13	d. Display/Invoke Display Preference Set: This message shall be used to invoke the displayed preference set that has been selected for display, and to specify logical display viewport location(s) if applicable.	391
		40.3.7.1.1.3.7.3-00	SIGN ON AND SIGN OFF PROCESSING	776
		40.3.7.1.1.3.7.3-01	The requirements of Section 3.7.1.1.3.7.3 shall apply to TAAS.	776
		40.3.7.1.1.3.7.4-00	DISPLAY PREFERENCE SET PROCESSING	776
		40.3.7.1.1.3.7.4-01	The requirements of Section 3.7.1.1.3.7.5 shall apply to TAAS.	776
		40.3.7.1.2.1.2-00	CONTROLLER INPUT LANGUAGE PROCESSING	783
		40.3.7.1.2.1.2-01	a. The TAAS shall meet the requirements of Section 3.7.1.2.1.2 and subordinate sections with the following exceptions: Entry of the following message categories is not required: 1) Metering Parameter Changes (Section 3.7.1.2.1.2.5) and 2) Automation Processing Messages (Section 3.7.1.2.1.2.11)	783
A1.6.2.75	REVIEW CURRENT AND PROJECTED TRAFFIC STATUS/ WEATHER	3.7.1.2.1.1.1-00	SITUATION DISPLAY	323
		3.7.1.2.1.1.1.3-00	TARGET AND TRACK DATA AND SYMBOLOGY	330
		3.7.1.2.1.1.1.3-44	The information conveyed in the track position symbol and FDB shall be adaptable from the following set of data: Callsign, Mode C Altitude or Pilot Reported Altitude and indication of Pilot Reported Altitude, Handoff Status/Indicator, Aircraft Type, Assigned Altitude or Interim ... (See SLS).	332
		3.7.1.2.1.1.2.1-00	FLIGHT DATA FIELDS	341
		3.7.1.2.1.1.2.1-03	Table 3.7-1 lists the Flight Plan Data fields with the maximum number of characters in the field. (See SLS).	341

Task to Requirement Traceability Matrix

Task Number	Task Statement	Paragraph Number	Requirement	Page No.
A1.6.2.75 (cont'd)	REVIEW CURRENT AND PROJECTED TRAFFIC STATUS/ WEATHER	3.7.1.2.1.1.2.1-07	Displayed Flight Data Entries shall be coded for content according to purpose and use.	342
		3.7.1.2.1.1.2.1-09	The capability shall be provided to display/delete FDE notations (FDENs) in specified fields of FDEs.	342
		40.3.7.1.2.1.1.1-00	SITUATION DISPLAY	779
		40.3.7.1.2.1.1.1-01	The requirements of Section 3.7.1.2.1.1.1 and subordinate sections shall apply to TAAS except that Graphic Weather from RWP, Conflict Resolution and MSAW Advisories, Route Displa . and Flight Plan Conflict/Trial Plan Display are not required.	779
		40.3.7.1.2.1.1.2.1-00	FLIGHT DATA FIELDS	781
		40.3.7.1.2.1.1.2.1-01	a. The requirements of Section 3.7.1.2.1.1.2.1 shall apply to TAAS with the following exceptions: The Next Posted Fix, CTA at Next Posted Fix, Next Sector/Next Facility, Lateral Nonconformance Indicator, Metering/Traffic Management Advisory, and Metering/Traffic Management Advisory ... (See SLS).	781
		40.3.7.1.2.1.1.3-00	ALERT AND RESOLUTION DISPLAY	782
		40.3.7.1.2.1.1.4-00	SPECIAL LISTS	782
		40.3.7.1.2.1.1.4-01	This logical display shall contain four lists of information in a concise and compact manner for quick scanning by the controller.	782
		40.3.7.1.2.1.1.4-03	Any changes to data contained in these lists shall be updated automatically.	782
		40.3.7.1.2.1.1.6-00	AIRPORT ENVIRONMENTAL DATA DISPLAY	783
		40.3.7.1.2.1.1.12-00	SUPPRESSED DISPLAY LIST DISPLAY	783
A1.6.3.1	DETECT NON-ACCEPTANCE OF INPUT DATA	3.7.1.1.2.3-00	RESPONSES TO INPUT MESSAGES	269
		3.7.1.1.2.3-01	Response messages shall be generated as appropriate to the system design and the devices employed for Data Entry and Display.	269
		3.7.1.1.2.3-02	There shall always be some response to the source of any local or remote message that originated at a manned position, to confirm that the system has taken note of the message and is acting on it.	269
		3.7.1.1.2.3-05	c. The following definitions shall apply to Response Messages: Error Message (see SLS).	270
		3.7.1.2.1.1.6-00	MESSAGE COMPOSITION AND RESPONSE DISPLAY	359

Task to Requirement Traceability Matrix

Task Number	Task Statement	Paragraph Number	Requirement	Page No.
A1.6.3.1 (cont'd)	DETECT NON-ACCEPTANCE OF INPUT DATA	3.7.1.2.1.1.5-05	The Response Display shall also contain computer responses to controller entered messages such as an accept, reject, or error.	358
		3.7.1.2.1.2-00	CONTROLLER INPUT LANGUAGE PROCESSING	363
		3.7.1.2.1.2-53	ae.5 Feedback for alphanumeric inputs shall appear on the Message Composition and Response Display.	366
		3.7.1.2.1.2-57	ae. Feedback - Every single type of every interaction activity shall result is some type of positive lexical feedback.	366
		3.7.1.2.1.2-58	af. Error Handling - When an error condition is encountered, the controller shall be provided appropriate feedback such that he/she can easily determine what was received by the system as input, what fields or data items were detected as being erroneous, and what error checking ... (See SLS).	366
		40.3.7.1.1.2-00	INPUT MESSAGE PROCESSING	769
		40.3.7.1.1.2-01	The requirements of Section 3.7.1.1.2 and subordinate sections shall apply to TAAS except that the reference to Section 3.7.1.1.3 shall be replaced by a reference to Section 40.3.7.1.1.3 and that the reference to Section 3.7.1.1.4 Automation Processing Subarea shall not apply to TAAS.	769
		40.3.7.1.2.1.1.5-00	MESSAGE COMPOSITION AND RESPONSE DISPLAY	783
		40.3.7.1.2.1.1.5-01	The requirements of Section 3.7.1.2.1.1.6 shall apply to TAAS.	783
		40.3.7.1.2.1.2-00	CONTROLLER INPUT LANGUAGE PROCESSING	783
		40.3.7.1.2.1.2-01	a. The TAAS shall meet the requirements of Section 3.7.1.2.1.2 and subordinate sections with the following exceptions: Entry of the following message categories is not required: 1) Metering Parameter Changes (Section 3.7.1.2.1.2.5) and 2) Automation Processing Messages (Section 3.7.1.2.1.2.11)	783
A1.6.3.2	INFORM SUPERVISOR OF TRANSIENT EQUIPMENT FAILURE	3.7.1.1.3.7.1-00	ATC MAIL MESSAGE PROCESSING	299
		3.7.1.1.3.7.1-01	The ACCC shall provide the capability to communicate via electronic media.	299
		40.3.7.1.1.3.7.1-00	ATC MAIL PROCESSING	776
		40.3.7.1.1.3.7.1-01	The requirements of Section 3.7.1.1.3.7.1 shall apply to TAAS.	776

Task to Requirement Traceability Matrix

Task Number	Task Statement	Paragraph Number	Requirement	Page No.
A1.6.4.1	DETECT OCCURRENCE OF SECTOR SUITE FAILURE	40.3.7.1.2.1.1.1-00	SITUATION DISPLAY	779
		40.3.7.1.2.1.1.2-00	FLIGHT DATA DISPLAY	779
		40.3.7.1.2.1.1.3-00	ALERT AND RESOLUTION DISPLAY	782
		40.3.7.1.2.1.1.4-00	SPECIAL LISTS	782
		40.3.7.1.2.1.1.5-00	MESSAGE COMPOSITION AND RESPONSE DISPLAY	783
		40.3.7.1.2.1.1.6-00	AIRPORT ENVIRONMENTAL DATA DISPLAY	783
		40.3.7.1.2.1.1.7-00	SYSTEM STATUS DATA DISPLAY	783
		40.3.7.1.2.1.1.8-00	STATIC INFORMATION DISPLAY	783
A1.6.4.2	OBSERVE SECTOR SUITE DATA BASE RESTORATION COMPLETION MESSAGE	3.7.1.4.3.3-00	FLIGHT PLAN PROCESSING CAPABILITY	411
		3.7.1.4.3.3-06	In the event the ACCC transitions from the Emergency Mode to a higher mode, the system's flight data shall automatically be made consistent with the flight data then at each operational position.	411
		3.7.1.4.3.3-07	a. This process shall require no controller action and shall result in no change to the controllers' displays except that: The Flight Data display shall indicate for each displayed FDE whether all data bases have been made consistent.	411
		40.3.7.1.2.1.1.1-00	SITUATION DISPLAY	779
		40.3.7.1.2.1.1.2-00	FLIGHT DATA DISPLAY	779
		40.3.7.1.2.1.1.7-00	SYSTEM STATUS DATA DISPLAY	795
		40.3.7.1.4.3.3-00	FLIGHT PLAN PROCESSING CAPABILITY	790
		40.3.7.1.4.3.3-01	The requirements of Section 3.7.1.4.3.3 shall apply to TAAS.	790
A1.6.4.3	FORWARD NOTICE OF EQUIPMENT STATUS	3.7.1.1.3.7.1-00	ATC MAIL MESSAGE PROCESSING	299
		3.7.1.1.3.7.1-01	The ACCC shall provide the capability to communicate via electronic media.	299
		40.3.7.1.1.3.7.1-00	ATC MAIL PROCESSING	776
		40.3.7.1.1.3.7.1-01	The requirements of Section 3.7.1.1.3.7.1 shall apply to TAAS.	776

Task Number	Task Statement	Paragraph Number	Requirement	Page No.
A1.6.4.4	RECEIVE STATUS OF SECTOR SUITE FAILURE FROM CONTROLLER / SUPERVISOR	3.7.1.1.3.7.1-00	ATC MAIL MESSAGE PROCESSING	299
		3.7.1.1.3.7.1-01	The ACCC shall provide the capability to communicate via electronic media.	299
		40.3.7.1.1.3.7.1-00	ATC MAIL PROCESSING	776
		40.3.7.1.1.3.7.1-01	The requirements of Section 3.7.1.1.3.7.1 shall apply to TAAS.	776
A1.6.4.5	REQUEST SPECIFIED DISPLAY DATA BE PRESENTED ON AND CONTROLLED AT A SPECIFIC COMMON CONSOLE	3.7.1.1.3.7.5-00	DISPLAY PREFERENCE SET PROCESSING	300
		3.7.1.1.3.7.5-07	In the event of reassignment of logical display windows to physical displays resulting from failure of a display surface containing one or more of the minimum required logical displays, the reassigned displays shall be presented using the display settings existing prior to the failure ... (See SLS).	301
		3.7.1.2.1.1-00	CONTROLLER DISPLAY LANGUAGE	320
		3.7.1.2.1.1-05	a. The system shall assign logical displays to physical displays through adaptation which is peculiar to each operational position.	320
		3.7.1.2.1.1-07	a. This adaptation shall be dynamically alterable by the controller and shall permit assignment of all eligible logical displays of an operational position to a single physical display.	320
		40.3.7.1.1.3.7.4-00	DISPLAY PREFERENCE SET PROCESSING	776
		40.3.7.1.1.3.7.4-01	The requirements of Section 3.7.1.1.3.7.5 shall apply to TAAS.	776
		40.3.7.1.2.1.1-00	CONTROLLER DISPLAY LANGUAGE	779
		40.3.7.1.2 1.1-01	The requirements of Section 3.7.1.2.1.1 excluding subordinate sections shall apply to TAAS except for the reference to Section 3.7.1.2.1.1.12.1 which does not apply.	779
A1.6.5.4	VERIFY COMPUTER ACTION DURING TRANSITION STAGES	3.7.1.2.1.1.1-00	SITUATION DISPLAY	323
		3.7.1.2.1.1.1.3-00	TARGET AND TRACK DATA AND SYMBOLOGY	330
		3.7.1.2.1.1.1.3-44	The information conveyed in the track position symbol and FDB shall be adaptable from the following set of data: Callsign, Mode C Altitude or Pilot Reported Altitude and indication of Pilot Reported Altitude, Handoff Status/Indicator, Aircraft Type, Assigned Altitude or Interim ... (See SLS).	332

Task Number	Task Statement	Paragraph Number	Requirement	Page No.
A1.6 5.4 (cont'd)	VERIFY COMPUTER ACTION DURING TRANSITION STAGES	3.7.1.2.1.1.2.1-00	FLIGHT DATA FIELDS	341
		3.7.1.2.1.1.2.1-03	Table 3.7-1 lists the Flight Plan Data fields with the maximum number of characters in the field. (See SLS).	341
		40.3.7.1.2.1.1.1-00	SITUATION DISPLAY	779
		40.3.7.1.2.1.1.1-01	The requirements of Section 3.7.1.2.1.1.1 and subordinate sections shall apply to TAAS except that Graphic Weather from RWP, Conflict Resolution and MSAW Advisories, Route Display, and Flight Plan Conflict/Trial Plan Display are not required.	779
		40.3.7.1.2.1 1.2.1-00	FLIGHT DATA FIELDS	781
		40.3.7.1.2.1 1.2.1-01	a. The requirements of Section 3.7.1.2.1.1.2.1 shall apply to TAAS with the following exceptions: The Next Posted Fix, CTA at Next Posted Fix, Next Sector/Next Facility, Lateral Nonconformance Indicator, Metering/Traffic Management Advisory, and Metering/Traffic Management Advisory ... (See SLS).	781
A1.6.5.75	DETECT OCCURRENCE OF TAAS FAILURE	3.7.1.2.1.1-00	CONTROLLER DISPLAY LANGUAGE	320
		3.7.1.2.1.1-04	In addition, each Main Display shall display an indication to denote a degraded mode of operation.	320
		3.7.1.2.1.1.8-00	SYSTEM STATUS DATA DISPLAY	359
		3.7.1.2.1.1.8-01	This logical display shall contain dynamic information regarding the status of ATC equipment, operational areas, airports, etc.	359
		3.7.1.2.1 1.8-02	The following data categories shall be included: Communication Channel Assignments, Radio Frequencies, Radio Equipment Outages and Repair Schedule, Radar Equipment Outages and Repair Schedule, NAVAID Outages and Repair Schedule, NAVAID Maintenance Schedule, Sectorization Plan ... (See SLS).	359
		40.3.7.1.1.1.3-00	SYSTEM FUNCTIONAL PERFORMANCE MONITORING CAPABILITY	766
		40.3.7.1 1 1.3-02	It shall report to the operational and supervisory personnel all events which affect the functional performance of the system and shall provide a comprehensive history of the TAAS's functional availability.	766
		40.3.7.1.1.1.3.3-00	MONITOR FUNCTION PERFORMANCE AND AVAILABILITY	767

Task to Requirement Traceability Matrix

Task Number	Task Statement	Paragraph Number	Requirement	Page No.
A1.6.5.75 (cont'd)	DETECT OCCURRENCE OF TAAS FAILURE	40.3.7.1.1.1.3.3-03	The TAAS shall alert supervisory and operational personnel to any degradation of the system's functional performance.	767
		40.3.7.1.1.1.3.3-04	If the performance of a function degrades to a point where it is no longer useful, performance of that function shall be automatically suspended and supervisory and operational personnel shall be notified.	767
		40.3.7.1.1.1.3.3-07	If the Reduced Capability Mode cannot be maintained, all supervisory and operational personnel shall be notified that the system is in the emergency mode.	767
		40.3.7.1.2.1.1-00	CONTROLLER DISPLAY LANGUAGE	779
		40.3.7.1.2.1.1-01	The requirements of Section 3.7.1.2.1.1 excluding subordinate sections shall apply to TAAS except for the reference to Section 3.7.1.2.1.1.12.1 which does not apply.	779
		40.3.7.1.2.1.1.7-00	SYSTEM STATUS DATA DISPLAY	783
		40.3.7.1.2.1.1.7-01	The requirements of Section 3.7.1.2.1.1.8 shall apply to TAAS except that the source of data shall be supervisor, area manager, controller manual entry or automatically-detected failures of TAAS resources, and that there is no requirement for additional categories defined as part of ... (See SLS).	783
A1.6.6.1	DETERMINE AIRCRAFT NEEDING SUBSTITUTE ROUTING	40.3.7.1.2.1.1.?-00	FLIGHT DATA DISPLAY	779
		40.3.7.1.2.1.1.4-00	SPECIAL LISTS	782
		40.3.7.1.2.1.1.7-00	SYSTEM STATUS DATA DISPLAY	783
A1.6.6.2	REVIEW STATUS OF QUESTIONABLE NAVAID	3.7.1.2.1.1.8-00	SYSTEM STATUS DATA DISPLAY	359
		3.7.1.2.1.1.8-01	This logical display shall contain dynamic information regarding the status of ATC equipment, operational areas, airports, etc.	359
		3.7.1.2.1.1.8-02	The following data categories shall be included: Communication Channel Assignments, Radio Frequencies, Radio Equipment Outages and Repair Schedule, Radar Equipment Outages and Repair Schedule, NAVAID Outages and Repair Schedule, NAVAID Maintenance Schedule, Sectorization Plan ... (See SLS).	359
		40.3.7.1.2.1 1.7-00	SYSTEM STATUS DATA DISPLAY	783
		40.3.7.1.2.1.1.7-01	The requirements of Section 3.7.1.2.1.1.8 shall apply to TAAS except that the source of data shall be supervisor, area manager, controller manual entry or automatically-detected failures of TAAS resources, and that there is no requirement for additional categories defined as part of ... (See SLS).	783

Task Number	Task Statement	Paragraph Number	Requirement	Page No.
A1.6.6.3	OBSERVE SUBSTITUTE ROUTING ON DISPLAY	3.7.1.2.1.1.2.1-00	FLIGHT DATA FIELDS	341
		3.7.1.2.1.1.2.1-80	u. The following FDEN categories shall be provided: An FDEN associated with the Route field shall denote a SWAP or preferential route.	345
		3.7.1.2.1.1.2.1-81	u. The Route field in conjunction with the FDEN shall provide for display of both the SWAP or preferential route and the associated segment of the filed route.	345
		3.7.1.2.1.1.8-00	SYSTEM STATUS DATA DISPLAY	359
		3.7.1.2.1.1.8-02	The following data categories shall be included: Communication Channel Assignments, Radio Frequencies, Radio Equipment Outages and Repair Schedule, Radar Equipment Outages and Repair Schedule, NAVAID Outages and Repair Schedule, NAVAID Maintenance Schedule, Sectorization Plan ... (See SLS).	359
		3.7.1.2.1.1.9-00	STATIC INFORMATION DISPLAY	360
		3.7.1.2.1.1.9-02	a. The following (graphic) data shall be displayed: Controller Charts, Sectional Aeronautical Charts, Instrument Approach Procedures, STARs/Profile Descent, SID/Departure Procedure, North Atlantic Route Chart, Pacific Route Chart, Substitute Routing.	360
		40.3.7.1.2.1.1.2.1-00	FLIGHT DATA FIELDS	781
		40.3.7.. 1.1.2.1-01	a. The requirements of Section 3.7.1.2.1.1.2.1 shall apply to TAAS with the following exceptions: The Next Posted Fix, CTA at Next Posted Fix, Next Sector/Next Facility, Lateral Nonconformance Indicator, Metering/Traffic Management Advisory, and Metering/Traffic Management Advisory ... (See SLS).	781
		40.3.7.1.2.1.1.7-00	SYSTEM STATUS DATA DISPLAY	783
		40.3.7.1.2 1.1.7-01	The requirements of Section 3.7.1.2.1.1.8 shall apply to TAAS except that the source of data shall be supervisor, area manager, controller manual entry or automatically-detected failures of TAAS resources, and that there is no requirement for additional categories defined as part of ... (See SLS).	783
		40.3.7.1.2.1.1.8-00	STATIC INFORMATION DISPLAY	783
		40.3.7.1.2.1.1.8-01	The requirements of Section 3.7.1.2.1.1.9 shall apply to TAAS.	783
A1.6.6.4	RECEIVE NOTICE OF NAVAID STATUS	3.7.1.1.3.7.1-00	ATC MAIL MESSAGE PROCESSING	299

Task Number	Task Statement	Paragraph Number	Requirement	Page No.
A1.6.6.4 (cont'd)	RECEIVE NOTICE OF NAVAID STATUS	3.7.1.1.3.7.1-01	The ACCC shall provide the capability to communicate via electronic media.	299
		40.3.7.1.1.3.7.1-00	ATC MAIL PROCESSING	776
		40.3.7.1.1.3.7.1-01	The requirements of Section 3.7.1.1.3.7.1 shall apply to TAAS.	776
A1.6.6.5	RECEIVE SUBSTITUTE ROUTING	3.7.1.1.3.7.1-00	ATC MAIL MESSAGE PROCESSING	299
		3.7.1.1.3.7.1-01	The ACCC shall provide the capability to communicate via electronic media.	299
		40.3.7.1.1.3.7.1-00	ATC MAIL PROCESSING	776
		40.3.7.1.1.3.7.1-01	The requirements of Section 3.7.1.1.3.7.1 shall apply to TAAS.	776
A1.6.6.6	RECEIVE CANCELLATION OF SUBSTITUTE ROUTING	3.7.1.1.3.7.1-00	ATC MAIL MESSAGE PROCESSING	299
		3.7.1.1.3.7.1-01	The ACCC shall provide the capability to communicate via electronic media.	299
		40.3.7.1.1.3.7.1-00	ATC MAIL PROCESSING	776
		40.3.7.1.1.3.7.1-01	The requirements of Section 3.7.1.1.3.7.1 shall apply to TAAS.	776
A1.6.6.7	FORWARD NAVAID STATUS TO ANOTHER CONTROLLER/ SUPERVISOR/ PILOT	3.7.1.1.3.7.1-00	ATC MAIL MESSAGE PROCESSING	299
		3.7.1.1.3.7.1-01	The ACCC shall provide the capability to communicate via electronic media.	299
		40.3.7.1.1.3.7.1-00	ATC MAIL PROCESSING	776
		40.3.7.1.1.3.7.1-01	The requirements of Section 3.7.1.1.3.7.1 shall apply to TAAS.	776
A1.6.6.8	FORWARD SUBSTITUTE ROUTING	3.7.1.1.3.7.1-00	ATC MAIL MESSAGE PROCESSING	299
		3.7.1.1.3.7.1-01	The ACCC shall provide the capability to communicate via electronic media.	299
		40.3.7.1.1.3.7.1-00	ATC MAIL PROCESSING	776
		40.3.7.1.1.3.7.1-01	The requirements of Section 3.7.1.1.3.7.1 shall apply to TAAS.	776
A1.6.6.9	DELETE PREVIOUS SUBSTITUTE ROUTING	3.7.1.1.3.7.1-00	ATC MAIL MESSAGE PROCESSING	299
		3.7.1.1.3.7.1-01	The ACCC shall provide the capability to communicate via electronic media.	299

Task to Requirement Traceability Matrix

Task Number	Task Statement	Paragraph Number	Requirement	Page No.
A1.6.6.9 (cont'd)	DELETE PREVIOUS SUBSTITUTE ROUTING	40.3.7.1.1.3.7.1-00	ATC MAIL PROCESSING	776
		40.3.7.1.1.3.7.1-01	The requirements of Section 3.7.1.1.3.7.1 shall apply to TAAS.	776
A1.6.6.12	RECEIVE SUPERVISOR NOTICE OF EQUIPMENT RELEASED TO MAINTENANCE	3.7.1.1.3.7.1-00	ATC MAIL MESSAGE PROCESSING	299
		3.7.1.1.3.7.1-01	The ACCC shall provide the capability to communicate via electronic media.	299
		40.3.7.1.1.3.7.1-00	ATC MAIL PROCESSING	776
		40.3.7.1.1.3.7.1-01	The requirements of Section 3.7.1.1.3.7.1 shall apply to TAAS.	776
A1.6.7.2	FORWARD ALTERNATE COMMUNICATION PATH	3.7.1.1.3.7.1-00	ATC MAIL MESSAGE PROCESSING	299
		3.7.1.1.3.7.1-01	The ACCC shall provide the capability to communicate via electronic media.	299
		40.3.7.1.1.3.7.1-00	ATC MAIL PROCESSING	776
		40.3.7.1.1.3.7.1-01	The requirements of Section 3.7.1.1.3.7.1 shall apply to TAAS.	776
A1.6.7.3	RECEIVE NEW FREQUENCY ASSIGNMENT	3.7.1.1.3.7.1-00	ATC MAIL MESSAGE PROCESSING	299
		3.7.1.1.3.7.1-01	The ACCC shall provide the capability to communicate via electronic media.	299
		40.3.7.1.1.3.7.1-00	ATC MAIL PROCESSING	776
		40.3.7.1.1.3.7.1-01	The requirements of Section 3.7.1.1.3.7.1 shall apply to TAAS.	776
A1.6.7.4	FORWARD NOTICE OF COMMUNICATION STATUS	3.7.1.1.3.7.1-00	ATC MAIL MESSAGE PROCESSING	299
		3.7.1.1.3.7.1-01	The ACCC shall provide the capability to communicate via electronic media.	299
		40.3.7.1.1.3.7.1-00	ATC MAIL PROCESSING	776
		40.3.7.1.1.3.7.1-01	The requirements of Section 3.7.1.1.3.7.1 shall apply to TAAS.	776
A1.6.7.5	FORWARD NEW FREQUENCY ASSIGNMENT TO ANOTHER CONTROLLER/SUPERVISOR	3.7.1.1.3.7.1-00	ATC MAIL MESSAGE PROCESSING	299
		3.7.1.1.3.7.1-01	The ACCC shall provide the capability to communicate via electronic media.	299

Task Number	Task Statement	Paragraph Number	Requirement	Page No.
A1.6.7.5 (cont'd)	FORWARD NEW FREQUENCY ASSIGNMENT TO ANOTHER CONTROLLER/SUPERVISOR	40.3.7.1.1.3.7.1-00	ATC MAIL PROCESSING	776
		40.3.7.1.1.3.7.1-01	The requirements of Section 3.7.1.1.3.7.1 shall apply to TAAS.	776
A1.6.7.6	RECEIVE NOTICE OF ALTERNATE COMMUNICATION PATH	3.7.1.1.3.7.1-00	ATC MAIL MESSAGE PROCESSING	299
		3.7.1.1.3.7.1-01	The ACCC shall provide the capability to communicate via electronic media.	299
		40.3.7.1.1.3.7.1-00	ATC MAIL PROCESSING	776
		40.3.7.1.1.3.7.1-01	The requirements of Section 3.7.1.1.3.7.1 shall apply to TAAS.	776
A1.6.8.3	REQUEST ASSISTANCE OR RELIEF	3.7.1.1.3.7.1-00	ATC MAIL MESSAGE PROCESSING	299
		3.7.1.1.3.7.1-01	The ACCC shall provide the capability to communicate via electronic media.	299
		40.3.7.1.1.3.7.1-00	ATC MAIL PROCESSING	776
		40.3.7.1.1.3.7.1-01	The requirements of Section 3.7.1.1.3.7.1 shall apply to TAAS.	776
A1.6.8.4	REQUEST FLOW CONTROL BE IMPOSED	3.7.1.1.3.7.1-00	ATC MAIL MESSAGE PROCESSING	299
		3.7.1.1.3.7.1-01	The ACCC shall provide the capability to communicate via electronic media.	299
		40.3.7.1.1.3.7.1-00	ATC MAIL PROCESSING	776
		40.3.7.1.1.3.7.1-01	The requirements of Section 3.7.1.1.3.7.1 shall apply to TAAS.	776
A1.6.9.2	REASSOCIATE DATA BLOCK	3.7.1.2.1.2.1-00	TRACK CONTROL	368
		3.7.1.2.1.2.1-40	1. Track Reposition: Flight Identification, New Coordinate Position.	371
		3.7.1.2.1.2.1-41	1. Track Reposition: This message shall provide the capability to change a designated track's coordinate position and its associated full data block.	371
		40.3.7.1.2.1.2-00	CONTROLLER INPUT LANGUAGE PROCESSING	783
		40.3.7.1.2.1.2-01	a. The TAAS shall meet the requirements of Section 3.7.1.2.1.2 and subordinate sections with the following exceptions: Entry of the following message categories is not required: 1) Metering Parameter Changes (Section 3.7.1.2.1.2.5) and 2) Automation Processing Messages (Section 3.7.1.2.1.2.11)	783

Task to Requirement Traceability Matrix

Task Number	Task Statement	Paragraph Number	Requirement	Page No.
A1.6.9.2 (cont'd)	REASSOCIATE DATA BLOCK	40.3.7.1.2.1.2-02	b. For track control messages all messages except Inhibit/Restore Automatic Point Out, Group Suppression, Vertical Velocity Readout, Flight Plan Extrapolation, Fix/Time Readout, Range/Bearing Readout, Range/Bearing/Fix Readout, Continuous Range Readout, and Radar Contact shall be processed.	783
A1.6.9.3	OBSERVE DATA BLOCK NOT ASSOCIATED WITH TARGET	3.7.1.2.1.1.1-00	SITUATION DISPLAY	323
		3.7.1.2.1.1.1.3-00	TARGET AND TRACK DATA AND SYMBOLOGY	330
		3.7.1.2.1.1.1.3-21	Target position symbols shall be placed at the radar reported position and shall not be the same symbols as used to denote track positions.	331
		40.3.7.1.2.1.1.1-00	SITUATION DISPLAY	779
		40.3.7.1.2.1.1.1-01	The requirements of Section 3.7.1.2.1.1.1 and subordinate sections shall apply to TAAS except that Graphic Weather from RWP, Conflict Resolution and MSAW Advisories, Route Display, and Flight Plan Conflict/Trial Plan Display are not required.	779
A1.6.9.5	INITIATE USE OF NON-RADAR SEPARATION STANDARDS	3.7.1.2.1.1.1-00	SITUATION DISPLAY	323
		3.7.1.2.1.1.1.3-21	Target position symbols shall be placed at the radar reported position and shall not be the same symbols as used to denote track positions.	331
		40.3.7.1.2.1.1.1-00	SITUATION DISPLAY	779
		40.3.7.1.2.1.1.1-01	The requirements of Section 3.7.1.2.1.1.1 and subordinate sections shall apply to TAAS except that Graphic Weather from RWP, Conflict Resolution and MSAW Advisories, Route Display, and Flight Plan Conflict/Trial Plan Display are not required.	779
		40.3.7.1.2.1.1.2-00	FLIGHT DATA DISPLAY	779
A1.6.9.7	INITIATE USE OF RADAR SEPARATION STANDARDS	3.7.1.2.1.1.1-00	SITUATION DISPLAY	323
		3.7.1.2.1.1.1.3-00	TARGET AND TRACK DATA AND SYMBOLOGY	330
		3.7.1.2.1.1.1.3-23	a. Target position symbols shall be coded to denote whether the target is primary or beacon.	331
		3.7.1.2.1.1.1.3-24	a. Target position symbols shall distinguish between the classes of primary targets and categories of beacon targets.	331

Task to Requirement Traceability Matrix

Task Number	Task Statement	Paragraph Number	Requirement	Page No.
A1.6.9.7 (cont'd)	INITIATE USE OF RADAR SEPARATION STANDARDS	3.7.1.2.1.1.1.3-44	The information conveyed in the track position symbol and FDB shall be adaptable from the following set of data: Callsign, Mode C Altitude or Pilot Reported Altitude and indication of Pilot Reported Altitude, Handoff Status/Indicator, Aircraft Type, Assigned Altitude or Interim ... (See SLS).	332
		40.3.7.1.2.1.1.1-00	SITUATION DISPLAY	779
		40.3.7.1.2.1.1.1-01	The requirements of Section 3.7.1.2.1.1.1 and subordinate sections shall apply to TAAS except that Graphic Weather from RWP, Conflict Resolution and MSAW Advisories, Route Display, and Flight Plan Conflict/Trial Plan Display are not required.	779
A1.6.9.9	OBSERVE RETURN OF NORMAL RADAR ENVIRONMENT	3.7.1.2.1.1.1-00	SITUATION DISPLAY	323
		3.7.1.2.1.1.1.3-00	TARGET AND TRACK DATA AND SYMBOLOGY	330
		3.7.1.2.1.1.1.3-23	c. Target position symbols shall be coded to denote whether the target is primary or beacon.	331
		3.7.1.2.1.1.1.3-44	The information conveyed in the track position symbol and FDB shall be adaptable from the following set of data: Callsign, Mode C Altitude or Pilot Reported Altitude and indication of Pilot Reported Altitude, Handoff Status/Indicator, Aircraft Type, Assigned Altitude or Interim ... (See SLS).	332
		40.3.7.1.2.1.1.1-00	SITUATION DISPLAY	779
		40.3.7.1.2.1.1.1-01	The requirements of Section 3.7.1.2.1.1.1 and subordinate sections shall apply to TAAS except that Graphic Weather from RWP, Conflict Resolution and MSAW Advisories, Route Display, and Flight Plan Conflict/Trial Plan Display are not required.	779
A1.6.9.10	OBSERVE AIRCRAFT TRACK IN COAST MODE	3.7.1.2.1.1.1-00	SITUATION DISPLAY	323
		3.7.1.2.1.1.1.3-00	TARGET AND TRACK DATA AND SYMBOLOGY	330
		3.7.1.2.1.1.1.3-29	d. Track status shall be coded within the track position symbol, leader line, or FDB and shall denote when a track is in coast, hold, flight plan extrapolation, or out of association with its paired flight plan.	331
		40.3.7.1.2.1.1.1-00	SITUATION DISPLAY	779

Task to Requirement Traceability Matrix

Task Number	Task Statement	Paragraph Number	Requirement	Page No.
A1.6.9.10 (cont'd)	OBSERVE AIRCRAFT TRACK IN COAST MODE	40.3.7.1.2.1.1.1-01	The requirements of Section 3.7.1.2.1.1.1 and subordinate sections shall apply to TAAS except that Graphic Weather from RWP, Conflict Resolution and MSAW Advisories, Route Display, and Flight Plan Conflict/Trial Plan Display are not required.	779
A1.6.9.75	REQUEST READOUT OF ASSIGNED/ REPORTED BEACON CODE	40.3.7.1.2.1.2-00	CONTROLLER INPUT LANGUAGE PROCESSING	783
		40.3.7.1.2.1.2-24	Any messages necessary for ATC at existing ARTS control positions shall also be enterable at the Sector Suite of the TAAS, even if such messages are not required for the AAS.	785
A1.6.10.1	OBSERVE MESSAGE ON LOSS OF FLIGHT PLAN DATA BASE	3.7.1.2.1.1.8-00	SYSTEM STATUS DATA DISPLAY	359
		3.7.1.2.1.1.8-01	This logical display shall contain dynamic information regarding the status of ATC equipment, operational areas, airports, etc.	359
		3.7.1.2.1.1.8-02	The following data categories shall be included: Communication Channel Assignments, Radio Frequencies, Radio Equipment Outages and Repair Schedule, Radar Equipment Outages and Repair Schedule, NAVAID Outages and Repair Schedule, NAVAID Maintenance Schedule, Sectorization Plan ... (See SLS).	359
		40.3.7.1.2.1.1.7-00	SYSTEM STATUS DATA DISPLAY	783
		40.3.7.1.2.1.1.7-01	The requirements of Section 3.7.1.2.1.1.8 shall apply to TAAS except that the source of data shall be supervisor, area manager, controller manual entry or automatically-detected failures of TAAS resources, and that there is no requirement for additional categories defined as part of ... (See SLS).	783
A1.6.10.2	DETECT FAILURE TO UPDATE FLIGHT PLAN DATA BASE	3.7.1.2.1.1.2.1-00	FLIGHT DATA FIELDS	341
		3.7.1.2.1.1.2.1-03	Table 3.7-1 lists the Flight Plan Data fields with the maximum number of characters in the field. (See SLS).	341
		40.3.7.1.2.1.1.2.1-00	FLIGHT DATA FIELDS	781
		40.3.7.1.2.1.1.2.1-01	a. The requirements of Section 3.7.1.2.1.1.2.1 shall apply to TAAS with the following exceptions: The Next Posted Fix, CTA at Next Posted Fix, Next Sector/Next Facility, Lateral Nonconformance Indicator, Metering/Traffic Management Advisory, and Metering/Traffic Management Advisory ... (See SLS).	781
A1.6.10.3	ENTER DISPLAY AMENDMENT MESSAGE ON CONSOLE	3.7.1.2.1.2.2-00	FLIGHT DATA CHANGES	373

Task Number	Task Statement	Paragraph Number	Requirement	Page No.
A1.6.10.3 (cont'd)	ENTER DISPLAY AMENDMENT MESSAGE ON CONSOLE	3.7.1.2.1.2.2-03	a. Flight Data Amendment: Flight Identification, Field to be Modified, New Data.	373
		3.7.1.2.1.2.2-04	a. Flight Data Amendment: This message shall be used to modify, add to, or delete previously entered flight data for any flight plan.	373
		3.7.1.4.3.3-00	FLIGHT PLAN PROCESSING CAPABILITY	411
		3.7.1.4.3.3-01	Flight and other data available at the sector at the time the Emergency Mode was entered shall continue to be displayed.	411
		3.7.1.4.3.3-03	The capability to enter new data, such as Flight Plans, and to modify existing data shall be provided.	411
		3.7.1.4.3.3-04	While operating in the Emergency Mode, sector-to-sector communications shall be continued in order to process messages such as FDE Pointout, Request FDEs, Initiate Handoff, Accept, Reject and Retract Handoff and to automatically distribute entered modifications to flight data to ... (See SLS).	411
		40.3.7.1.2.1.2-00	CONTROLLER INPUT LANGUAGE PROCESSING	783
		40.3.7.1.2.1.2-07	c. For Flight Data Changes (Section 3.7.1.2.1.2.2) all messages shall be processed by TAAS except Emergency Airport, Implement Reroute, Implement Absorption Maneuver, Create/Delete Route, and Repetitive Route Amendment.	784
		40.3.7.1.4.3.3-00	FLIGHT PLAN PROCESSING CAPABILITY	790
		40.3.7.1.4.3.3-01	The requirements of Section 3.7.1.4.3.3 shall apply to TAAS.	790
A1.6.10.4	ENTER FLIGHT PLAN ON CONSOLE	3.7.1.2.1.2.2-00	FLIGHT DATA CHANGES	373
		3.7.1.2.1.2.2-15	e. Flight Plan: Callsign, (Flight Rules), (Type of Flight), (Number of Aircraft), Type of Aircraft, (Model Number), (Heavy Jet Indicator), Equipment, Departure Point, Departure Time, Coordination Fix, Coordination Time/Elapsed Time to Coordinate Fix, True Air Speed, Altitude, Route, ... (See SLS).	374
		3.7.1.2 1.2.2-16	e. Flight Plan: This message shall be used to enter flight plan data into the system for a flight.	374
		3.7.1.4.3.3-00	FLIGHT PLAN PROCESSING CAPABILITY	411
		3.7.1.4.3.3-01	Flight and other data available at the sector at the time the Emergency Mode was entered shall continue to be displayed.	411

Task to Requirement Traceability Matrix

Task Number	Task Statement	Paragraph Number	Requirement	Page No.
A1.6.10.4 (cont'd)	ENTER FLIGHT PLAN ON CONSOLE	3.7.1.4.3.3-03	The capability to enter new data, such as Flight Plans, and to modify existing data shall be provided.	411
		3.7.1.4.3.3-04	While operating in the Emergency Mode, sector-to-sector communications shall be continued in order to process messages such as FDE Pointout, Request FDEs, Initiate Handoff, Accept, Reject and Retract Handoff and to automatically distribute entered modifications to flight data to ... (See SLS).	411
		40.3.7.1.2.1.2-00	CONTROLLER INPUT LANGUAGE PROCESSING	783
		40.3.7.1.2.1.2-07	c. For Flight Data Changes (Section 3.7.1.2.1.2.2) all messages shall be processed by TAAS except Emergency Airport, Implement Reroute, Implement Absorption Maneuver, Create/Delete Route, and Repetitive Route Amendment.	784
		40.3.7.1.2.1.2-10	c. The capability shall also be provided for the controller to enter a new IFR flight plan for use only within the facility.	784
		40.3.7.1.2.1.2-11	c. The new flight plan shall contain the aircraft ID, aircraft data (optional), assigned beacon code (optional), speed (optional), entry/departure point (optional), exit/arrival point (optional), estimated time of entry or departure (optional), assigned or requested altitude ... (See SLS).	784
		40.3.7.1.4.3.3-00	FLIGHT PLAN PROCESSING CAPABILITY	798
		40.3.7.1.4.3.3-01	The requirements of Section 3.7.1.4.3.3 shall apply to TAAS.	798
A1.6.10.5	VERIFY FLIGHT PLAN DATA BASE TRANSITION ACTIVITIES	3.7.1.1.3.7.1-00	ATC MAIL MESSAGE PROCESSING	299
		3.7.1.1.3.7.1-01	The ACCC shall provide the capability to communicate via electronic media.	299
		3.7.1.2.1.1.1-00	SITUATION DISPLAY	323
		3.7.1.2.1.1.1.3-00	TARGET AND TRACK DATA AND SYMBOLOGY	330
		3.7.1.2.1.1.1.3-44	The information conveyed in the track position symbol and FDB shall be adaptable from the following set of data: Callsign, Mode C Altitude or Pilot Reported Altitude and Indication of Pilot Reported Altitude, Handoff Status/Indicator, Aircraft Type, Assigned Altitude or Interim ... (See SLS).	332
		3.7.1.2.1.1.2.1-00	FLIGHT DATA FIELDS	341
		3.7.1.2.1.1.2.1-03	Table 3.7-1 lists the Flight Plan Data fields with the maximum number of characters in the field. (See SLS).	341

Task Number	Task Statement	Paragraph Number	Requirement	Page No.
A1.6.10.5 (cont'd)	VERIFY FLIGHT PLAN DATA BASE TRANSITION ACTIVITIES	40.3.7.1.1.3.7.1-00	ATC MAIL PROCESSING	776
		40.3.7.1.1.3.7.1-01	The requirements of Section 3.7.1.1.3.7.1 shall apply to TAAS.	776
		40.3.7.1.2.1.1.1-00	SITUATION DISPLAY	779
		40.3.7.1.2.1.1.1-01	The requirements of Section 3.7.1.2.1.1.1 and subordinate sections shall apply to TAAS except that Graphic Weather from RWP, Conflict Resolution and MSAW Advisories, Route Display, and Flight Plan Conflict/Trial Plan Display are not required.	779
		40.3.7.1.2.1.1.2.1-00	FLIGHT DATA FIELDS	781
		40.3.7.1.2.1.1.2.1-01	a. The requirements of Section 3.7.1.2.1.1.2.1 shall apply to TAAS with the following exceptions: The Next Posted Fix, CTA at Next Posted Fix, Next Sector/Next Facility, Lateral Nonconformance Indicator, Metering/Traffic Management Advisory, and Metering/Traffic Management Advisory ... (See SLS).	781
A1.6.11.2	QUERY WHETHER OTHERS ARE RECEIVING AN AIRCRAFT'S TRANSMISSIONS	3.7.1.1.3.7.1-00	ATC MAIL MESSAGE PROCESSING	299
		3.7.1.1.3.7.1-01	The ACCC shall provide the capability to communicate via electronic media.	299
		40.3.7.1.1.3.7.1-00	ATC MAIL PROCESSING	776
		40.3.7.1.1.3.7.1-01	The requirements of Section 3.7.1.1.3.7.1 shall apply to TAAS.	776
A1.6.11.4	RECEIVE NOTICE OF TRANSIENT COMMUNICATION FAILURE	3.7.1.1.3.7.1-00	ATC MAIL MESSAGE PROCESSING	299
		3.7.1.1.3.7.1-01	The ACCC shall provide the capability to communicate via electronic media.	299
		40.3.7.1.1.3.7.1-00	ATC MAIL PROCESSING	776
		40.3.7.1.1.3.7.1-01	The requirements of Section 3.7.1.1.3.7.1 shall apply to TAAS.	776
A1.6.12.1	RECEIVE NOTICE TO TAKE OVER AIRSPACE	3.7.1.1.3.7.1-00	ATC MAIL MESSAGE PROCESSING	299
		3.7.1.1.3.7.1-01	The ACCC shall provide the capability to communicate via electronic media.	299
		40.3.7.1.1.3.7.1-00	ATC MAIL PROCESSING	776
		40.3.7.1.1.3.7.1-01	The requirements of Section 3.7.1.1.3.7.1 shall apply to TAAS.	776

Task Number	Task Statement	Paragraph Number	Requirement	Page No.
A1.6.12.2	RECEIVE NOTICE TO PREPARE FOR SECTOR RECONFIGURATION	3.7.1.1.3.7.1-00	ATC MAIL MESSAGE PROCESSING	299
		3.7.1.1.3.7.1-01	The ACCC shall provide the capability to communicate via electronic media.	299
		40.3.7.1.1.3.7.1-00	ATC MAIL PROCESSING	776
		40.3.7.1.1.3.7.1-01	The requirements of Section 3.7.1.1.3.7.1 shall apply to TAAS.	776
		40.3.7.1.1.3.9.1-00	SECTORIZATION SUPPORT	777
		40.3.7.1.1.3.9.1-02	The supervisor shall have the capability to initiate the simultaneous display of FDEs at more than one position.	777
		40.3.7.1.1.3.9.1-03	The FDEs shall be emphasized to indicate their status to the affected controllers.	777
		40.3.7.1.1.3.9.1-04	Upon entry of the resectorization message, a prompt shall be displayed informing the controller that a resectorization is about to occur.	777
		40.3.7.1.1.3.9.1-05	The specific FPAs or sectors that will be added or deleted as a result of the resectorization shall be displayed.	777
		40.3.7.1.1.3.9.1-06	All full data blocks that were in the airspace assigned to another position and were displayed shall be displayed at the position now responsible for the airspace.	777
		40.3.7.1.2.1.1.2-00	FLIGHT DATA DISPLAY	779
A1.6.12.3	RECEIVE NOTICE TO RELEASE AIRSPACE	3.7.1.1.3.7.1-00	ATC MAIL MESSAGE PROCESSING	299
		3.7.1.1.3.7.1-01	The ACCC shall provide the capability to communicate via electronic media.	299
		40.3.7.1.1.3.7.1-00	ATC MAIL PROCESSING	776
		40.3.7.1.1.3.7.1-01	The requirements of Section 3.7.1.1.3.7.1 shall apply to TAAS.	776
A1.6.12.4	RECEIVE NOTICE THAT ADJACENT FACILITY IS OPERATIVE	3.7.1.1.3.7.1-00	ATC MAIL MESSAGE PROCESSING	299
		3.7.1.1.3.7.1-01	The ACCC shall provide the capability to communicate via electronic media.	299
		40.3.7.1.1.3.7.1-00	ATC MAIL PROCESSING	776
		40.3.7.1.1.3.7.1-01	The requirements of Section 3.7.1.1.3.7.1 shall apply to TAAS.	776

Task Number	Task Statement	Paragraph Number	Requirement	Page No.
A1.6.12.5	RECEIVE NOTICE THAT ADJACENT FACILITY IS INOPERATIVE	3.7.1.1.3.7.1-00	ATC MAIL MESSAGE PROCESSING	299
		3.7.1.1.3.7.1-01	The ACCC shall provide the capability to communicate via electronic media.	299
		40.3.7.1.1.3.7.1-00	ATC MAIL PROCESSING	776
		40.3.7.1.1.3.7.1-01	The requirements of Section 3.7.1.1.3.7.1 shall apply to TAAS.	776
A1.6.12.6	ENTER RECONFIGURATION/ RESECTORIZATION ACCEPTANCE	3.7.1.2.1.2.1-00	TRACK CONTROL	368
		3.7.1.2.1.2.1-72	v. Accept Resectorization: (All Handoffs Indicator).	373
		3.7.1.2.1.2.1-73	v. Accept Resectorization: This message shall be used at the position now responsible for an FPA to accept control of all flights in the FPA being controlled at another position and redirect handoffs to the new position.	373
		3.7.1.2.1.2.1-74	v. Accept Resectorization: This message shall provide the option for the controller to simultaneously accept all handoffs resulting from the resectorization.	373
		40.3.7.1.1.3.9.1-00	SECTORIZATION SUPPORT	777
		40.3.7.1.1.3.9.1-01	The controller at the position now responsible for the airspace shall be able to accept control of all aircraft in the airspace being controlled at another position by entering an Accept Resectorization message.	777
		40.3.7.1.1.3.9.1-09	Aircraft in handoff to the position being combined or decombined shall be redirected to the new position upon entry of the Accept Resectorization message.	777
		40.3.7.1.2.1.2-00	CONTROLLER INPUT LANGUAGE PROCESSING	783
		40.3.7.1.2.1.2-01	a. The TAAS shall meet the requirements of Section 3.7.1.2.1.2 and subordinate sections with the following exceptions: Entry of the following message categories is not required: 1) Metering Parameter Changes (Section 3.7.1.2.1.2.5) and 2) Automation Processing Messages (Section 3.7.1.2.1.2.11)	783
		40.3.7.1.2.1.2-02	b. For track control messages all messages except Inhibit/Restore Automatic Pointout, Group Suppression, Vertical Velocity Readout, Flight Plan Extrapolation, Fix/Time Readout, Range/Bearing Readout, Range/Bearing/Fix Readout, Continuous Range Readout, and Radar Contact shall be processed.	783

Task Number	Task Statement	Paragraph Number	Requirement	Page No.
A1.6.12.6 (cont'd)	ENTER RECONFIGURATION/ RESECTORIZATION ACCEPTANCE	4Ø.3.7.1.2 1.2-Ø4	b. The Accept Resectorization message shall apply to terminal airspace instead of FPAs.	784
A1.6.13.1	RECEIVE NOTICE OF RADAR SENSOR STATUS	3.7. .1.3.7.1-ØØ	ATC MAIL MESSAGE PROCESSING	299
		3.7.1.1.3.7.1-Ø1	The ACCC shall provide the capability to communicate via electronic media.	299
		4Ø.3.7.1.1.3.7.1-ØØ	ATC MAIL PROCESSING	776
		4Ø.3.7.1.1.3.7 1-Ø1	The requirements of Section 3.7.1.1.3.7.1 shall apply to TAAS.	776
A1.6 13.2	RECEIVE PROCEDURES TO BE USED TO ACCOMMODATE SENSOR OUTAGE	3.7.1.1.3.7.1-ØØ	ATC MAIL MESSAGE PROCESSING	299
		3.7.1.1.3 7.1-Ø1	The ACCC shall provide the capability to communicate via electronic media.	299
		4Ø.3.7.1.1.3.7.1-ØØ	ATC MAIL PROCESSING	776
		4Ø.3.7.1.1.3.7.1-Ø1	The requirements of Section 3.7.1.1.3.7.1 shall apply to TAAS.	776
A1.6.13 3	PERCEIVE TRACKING OR TRANSPONDER FAILURE	3.7.1.2.1.1.1-Øø	SITUATION DISPLAY	323
		3.7.1.2.1.1.1.3-ØØ	TARGET AND TRACK DATA AND SYMBOLOGY	330
		3.7.1.2.1.1.1.3-23	a. Target position symbols shall be coded to denote whether the target is primary or beacon.	331
		3.7.1.2.1.1.1.3-24	a. Target position symbols shall distinguish between the classes of primary targets and categories of beacon targets.	331
		3.7 1.2.1.1.1.3-29	d. Track status shall be coded within the track position symbol, leader line, or FDB and shall denote when a track is in coast, hold, flight plan extrapolation, or out of association with its paired flight plan.	331
		4Ø.3.7.1.2.1.1.1-ØØ	SITUATION DISPLAY	779
		4Ø.3.7.1.2.1.1.1-Ø1	The requirements of Section 3.7.1.2.1.1.1 and subordinate sections shall apply to TAAS except that Graphic Weather from RAP, Conflict Resolution and MSAW Advisories, Route Display, and Flight Plan Conflict/Trial Plan Display are not required.	779
A1.6 13.4	FORWARD NOTICE OF RADAR SENSOR STATUS TO ANOTHER CONTROLLER/ SUPERVISOR	3.7.1.1 3.7.1-ØØ	ATC MAIL MESSAGE PROCESSING	299
		3.7.1.1.3.7.1-Ø1	The ACCC shall provide the capability to communicate via electronic media.	299

Task to Requirement Traceability Matrix

Task Number	Task Statement	Paragraph Number	Requirement	Page No.
A1.6.13.4 (cont'd)	FORWARD NOTICE OF RADAR SENSOR STATUS TO ANOTHER CONTROLLER/ SUPERVISOR	40.3.7.1.1.3.7.1-00	ATC MAIL PROCESSING	776
		40.3.7.1.1.3.7.1-01	The requirements of Section 3.7.1.1.3.7.1 shall apply to TAAS.	776
		40.3.7.1.1.3.7.1-01	The requirements of Section 3.7.1.1.3.7.1 shall apply to TAAS.	776

Task Statement Orphans

Task Number	Task Statement	Task Type
A1.0	PERFORM TAAS DOMESTIC AIR TRAFFIC CONTROL	
A1.0.0.0	GENERATE CLEARANCE	
A1.1	PERFORM SITUATION MONITORING	
A1.1.1	CHECKING AND EVALUATING SEPARATION	
A1.1.1.7	DETERMINE WHETHER AIRCRAFT MAY BE SEPARATED BY LESS THAN PRESCRIBED MINIMA	A
A1.1.1.15	DETERMINE WHETHER AIRSPACE SEPARATION STANDARDS MAY BE VIOLATED	A
A1.1.1.17	DETERMINE WHETHER FLOW RESTRICTIONS MAY BE VIOLATED	A
A1.1.2	RECEIVING SYSTEM STATUS INFORMATION	
A1.1.2.6	REQUEST REPORT ON NAVAID STATUS	VC
A1.1.3	ANALYZING INITIAL REQUESTS FOR CLEARANCES	
A1.1.4	PROCESSING DEPARTURE/ EN ROUTE TIME INFORMATION	
A1.1.5	PROCESSING REQUESTS FOR FLIGHT FOLLOWING	
A1.1.5.5	INFORM PILOT OF ALTERNATE INSTRUCTIONS NECESSARY FOR FLIGHT FOLLOWING SERVICE	VC
A1.1.6	HOUSEKEEPING	
A1.1.6.52	REMOVE OBSOLETE PAPER RECORDS OR RECORDED DATA	E
A1.2	RESOLVE AIRCRAFT CONFLICTS	
A1.2.1	PERFORMING AIRCRAFT CONFLICT RESOLUTION	
A1.2.1.2	DETERMINE VALIDITY OF POTENTIAL AIRCRAFT CONFLICT NOTICE OR INDICATION	A
A1.2.1.3	RECEIVE CONTROLLER NOTICE OF POTENTIAL AIRCRAFT CONFLICT IN SECTOR	VC
A1.2.1.4	INFORM CONTROLLER OF POTENTIAL AIRCRAFT CONFLICT IN HIS SECTOR	VC
A1.2.2	PERFORMING MINIMUM SAFE ALTITUDE PROCESSING	
A1.2.2.3	RECEIVE CONTROLLER NOTICE OF POTENTIAL MSAW IN SECTOR	VC
A1.2.2.4	INFORM CONTROLLER OF POTENTIAL MSAW IN HIS SECTOR	VC
A1.2.2.6	DETERMINE VALIDITY OF MSAW NOTICE OR INDICATION	A
A1.2.3	PERFORMING AIRSPACE CONFLICT PROCESSING	
A1.2.3.2	RECEIVE CONTROLLER NOTICE OF POTENTIAL AIRSPACE CONFLICT IN SECTOR	VC
A1.2.3.75	DETERMINE VALIDITY OF AIRSPACE CONFLICT NOTICE	A
A1.2.4	ISSUING UNSAFE CONDITION ADVISORIES	
A1.2.4.3	FORMULATE ADVISORY/ SAFETY ALERT CONTENT	A
A1.2.4.5	ISSUE TRAFFIC ADVISORY/ SAFETY ALERT IN REGARD TO TRAFFIC PROXIMITY	VC
A1.2.4.6	INFORM PILOT WHEN CLEAR OF TRAFFIC	VC
A1.2.4.7	ISSUE ADVISORY IN REGARD TO A NON-CONTROLLED OBJECT	VC
A1.2.4.8	INFORM PILOT WHEN CLEAR OF NON-CONTROLLED OBJECT	VC
A1.2.4.9	ISSUE ADVISORY IN REGARD TO RESTRICTED AIRSPACE PROXIMITY	VC
A1.2.4.10	ISSUE ADVISORY IN REGARD TO FLIGHT PLAN DEVIATION	VC
A1.2.4.12	ISSUE SAFETY ALERT IN REGARD TO MINIMUM ALTITUDE	VC
A1.2.4.14	DETERMINE NEED FOR ADVISORY/ SAFETY ALERT/ CLEARANCE	A
A1.2.5	SUPPPESSING ALERTS	
A1.3	MANAGE AIR TRAFFIC SEQUENCES	
A1.3.1	RESPONDING TO TRAFFIC MANAGEMENT CONSTRAINTS/ FLOW CONFLICTS	

Task Statement Orphans

Task Number	Task Statement	Task Type
A1.3.1.3	DISCUSS DISCONTINUANCE OF TRAFFIC MANAGEMENT RESTRICTION/ TRAFFIC REROUTE WITH SUPERVISOR	A/VC
A1.3.1.4	REVIEW OPTIONS TO BRING AIRCRAFT INTO CONFORMANCE WITH TRAFFIC MANAGEMENT RESTRICTIONS	A
A1.3.1.5	NEGOTIATE TRAFFIC MANAGEMENT ACTION WITH PILOT	VC
A1.3.1.11	RECEIVE SUPERVISOR BRIEFING ON WHAT TRAFFIC CONDITIONS TO EXPECT	VC/A
A1.3.2	PROCESSING DEVIATIONS	
A1.3.2.3	DETERMINE MANEUVER TO ESTABLISH/ RESTORE FLIGHT PLAN CONFORMANCE	A
A1.3.3	RESPONDING TO SPECIAL USE AIRSPACE EVENTS	
A1.3.3.4	DETERMINE RESTRICTIONS TO USERS NECESSARY WITHIN RELEASED AIRSPACE	A
A1.3.4	ESTABLISHING ARRIVAL SEQUENCES	
A1.3.4.2	PROJECT TRAFFIC SEQUENCE TO ESTABLISH/ MODIFY APPROACH FLOW TO AIRPORT OR SECTOR	A
A1.3.4.6	PROJECT MENTALLY THE ARRIVAL FLOW FOR AIRCRAFT LANDING IN OR NEAR THIS SECTOR	A
A1.3.4.7	ISSUE NEW ATIS CODE	VC
A1.3.4.8	INFORM PILOT TO OBTAIN NEW ATIS INFORMATION	VC
A1.3.4.9	ISSUE ATIS INFORMATION	VC
A1.3.5	MANAGING DEPARTURE FLOWS	
A1.3.5.4	PROJECT TRAFFIC SEQUENCE TO ESTABLISH/ MODIFY DEPARTURE FLOW	A
A1.3.6	MONITORING NON-CONTROLLED OBJECTS	
A1.3.7	RESPONDING TO TEMPORARY RELEASE OF AIRSPACE REQUESTS	
A1.3.7.5	DISCUSS RELEASE OF AIRSPACE FOR TEMPORARY USE WITH SUPERVISOR/ OTHER CONTROLLER	A/VC
A1.3.8	REQUESTING TEMPORARY RELEASE OF AIRSPACE	
A1.4	ROUTE OR PLAN FLIGHTS	
A1.4.1	PLANNING CLEARANCES	
A1.4.1.12	DISCUSS CLEARANCE ALTERNATIVES WITH PILOT	VC
A1.4.1.14	DETERMINE PRIORITY OF CONTROL ACTIONS	A
A1.4.1.16	FORMULATE CONTROLLER PLAN OF ACTION FOR CLEARANCE GENERATION	A
A1.4.1.75	DETERMINE APPROPRIATE MENTAL PLAN FOR AIRCRAFT CLEARANCE	A
A1.4.2	RESPONDING TO CONTINGENCIES	
A1.4.2.3	ISSUE INSTRUCTIONS TO PILOT (NORDO) FOR IDENTIFICATION TURN/ TRANSPONDER RESPONSE	VC
A1.4.3	RECOGNIZING SPECIAL OPERATIONS	
A1.4.4	REVIEWING FLIGHT PLANS	
A1.4.4.6	RECEIVE FLIGHT PLAN FROM PILOT	VC
A1.4.4.7	RECEIVE FLIGHT PLAN VERBALLY FORWARDED	VC
A1.4.4.8	QUERY PILOT ABOUT FLIGHT PLAN	VC
A1.4.4.10	FORWARD FLIGHT PLAN VERBALLY	VC
A1.4.5	PROCESSING FLIGHT PLAN AMENDMENTS	
A1.4.5.6	RECEIVE FLIGHT PLAN AMENDMENT VERBALLY FORWARDED	VC
A1.4.5.7	RECEIVE PILOT'S POSITION REPORT	VC
A1.4.5.8	FORWARD FLIGHT PLAN AMENDMENT VERBALLY	VC
A1.4.6	RECEIVING TRANSFER OF CONTROL/ RADAR IDENTIFICATION	
A1.4.6.5	DETERMINE THAT AIRCRAFT IS ENTERING SECTOR	A

Task Statement Orphans

Task Number	Task Statement	Task Type
A1.4.7	INITIATING TRANSFER OF CONTROL/ RADAR IDENTIFICATION	
A1.4.7.5	DISCUSS TRANSFER OF CONTROL WITH OTHER CONTROLLER	VC
A1.4.7.6	INITIATE VERBAL HANDOFF	VC
A1.4.8	ISSUING POINTOUTS	
A1.4.8.7	DISCUSS POINTOUT WITH OTHER CONTROLLER	VC
A1.4.9	RESPONDING TO POINTOUTS	
A1.4.10	ISSUING CLEARANCES	
A1.4.10.3	SUGGEST CLEARANCE ALTERNATIVES TO PILOT	VC
A1.4.10.4	FORMULATE A CLEARANCE WITH APPROPRIATE INSTRUCTIONS	A
A1.4.10.5	ISSUE CLEARANCE AND INSTRUCTIONS TO PILOT	VC
A1.4.10.8	QUERY PILOT REGARDING CONFORMANCE WITH CLEARANCE	VC
A1.4.12	MANAGING AUTOMATED HANDOFF FEATURES	
A1.4.13	ESTABLISHING, MAINTAINING, AND TERMINATING RADIO COMMUNICATIONS	
A1.4.13.1	RECEIVE REQUEST TO CANCEL AIR TRAFFIC SERVICES	VC
A1.4.13.2	TERMINATE RADIO COMMUNICATIONS WITH AIRCRAFT	VC
A1.4.13.3	RECEIVE ARRIVAL MESSAGE	VC
A1.4.13.5	ISSUE CHANGE OF FREQUENCY TO PILOT	VC
A1.4.13.6	RECEIVE INITIAL RADIO CONTACT FROM PILOT	VC
A1.4.14	ESTABLISHING/ REESTABLISHING RADAR IDENTIFICATION	
A1.4.14.2	INFORM PILOT THAT RADAR CONTACT IS ESTABLISHED	VC
A1.5	ASSESS WEATHER IMPACT	
A1.5.1	RESPONDING TO SIGNIFICANT WEATHER INFORMATION	
A1.5.1.5	DETERMINE WHETHER ANOTHER CONTROLLER OR PILOT NEEDS WEATHER ADVISORY	A
A1.5.1.16	BROADCAST RECORDED WEATHER INFORMATION	VC
A1.5.1.76	DETERMINE WEATHER IMPACT ON ROUTES/ FLOW	A
A1.5.1.77	DETERMINE ALTITUDE/ROUTE CHANGE TO BYPASS SEVERE WEATHER	A
A1.5 1.79	RECEIVE PIREP ON WEATHER	VC
A1.5.1.81	FORWARD URGENT PIREP TO OTHER CONTROLLER	VC
A1.5.1.82	RECORD PIREP NOTE	E
A1.5.2	PROCESSING WEATHER REPORTS	
A1.5.2.6	REVIEW ATIS VOICE RECORDING	VC/A
A1.6	MANAGE SECTOR/POSITION RESOURCES	
A1.6.1	BRIEFING RELIEVING CONTROLLERS	
A1.6.2	ASSUMING POSITION RESPONSIBILITY	
A1.6.2.10	DETERMINE IF READY TO ACCEPT CONTROL RESPONSIBILITY	A
A1.6.3	RESPONDING TO TRANSIENT COMPUTER FAILURES	
A1.6.4	EXECUTING BACKUP PROCEDURES FOR SECTOR SUITE FAILURES	
A1.6.5	EXECUTING BACKUP PROCEDURES FOR TAAS FAILURES	
A1.6.5.6	RECEIVE CONFIRMATION OF COMPUTER ACTION DURING TRANSITION STAGES	VC
A1.6 5.76	REVERT TO TAAS BACKUP PROCEDURES (TBD)	TBD

Task Statement Orphans

Task Number	Task Statement	Task Type
A1.6.5.77	REVERT TO TAAS EMERGENCY MODE PROCEDURES (TBD)	TBD
A1.6.5.78	REVERT TO TAAS REDUCED CAPABILITY MODE PROCEDURES (TBD)	TBD
A1.6.6	EXECUTING BACKUP NAVAID PROCEDURES	
A1.6.6.10	DISCUSS APPROPRIATENESS WITH SUPERVISOR OF RELEASING EQUIPMENT TO MAINTENANCE	A/VC
A1.6.6.11	REVIEW NEED/ CANCELLATION OF SUBSTITUTE ROUTING WITH SUPERVISOR	A/VC
A1.6.7	EXECUTING BACKUP PROCEDURES FOR COMMUNICATION FAILURES	
A1.6.7.1	DETECT COMMUNICATION FAILURE	VC/A
A1.6.8	MANAGING PERSONAL WORKLOAD	
A1.6.8.1	DETERMINE IMPENDING CONTROLLER OVERLOAD	A
A1.6.9	PERFORMING PROCEDURES FOR NON-RADAR ENVIRONMENT	
A1.6.9.1	INFORM PILOT OF RADAR CONTACT LOST	VC
A1.6.9.4	TERMINATE RADAR SERVICE TO AIRCRAFT	VC
A1.6.9.8	REQUEST PILOT POSITION REPORTS	VC
A1.6.10	EXECUTING BACKUP PROCEDURES FOR LOSS OF FLIGHT PLAN DATA BASE	
A1.6.11	RESPONDING TO TRANSIENT VSCS FAILURES	
A1.6.11.1	DETECT UNRELIABLE VSCS COMMUNICATION	A/VC
A1.6.11.3	ISSUE ALTERNATE COMMUNICATION FOR AIR/GROUND TRANSMISSION	VC
A1.6.12	RESPONDING TO AIRSPACE RECONFIGURATIONS/ RESECTORIZATIONS	
A1.6.13	RESPONDING TO SENSOR OUTAGES	

APPENDIX G

SITE VISIT INFORMATION

No Air Traffic Control sites were visited as part of the preparation of this version of Volume IV. Operations content was derived from the earlier report of ACF/ACCC controller tasks [8] and from the current System Level Specification [21]. The task and element information was presented to terminal representatives on the Sector Suite Requirements Validation Team (SSRVT) for review and validation. In the preparation of the earliest version of terminal and en route controller analyses [2, 6], a significant number of TRACONs were visited and site personnel interviewed.

APPENDIX H

EXPANDED OPERATIONAL SCENARIOS

This appendix contains expansions of the two baseline scenarios for TAAS terminal controllers (Appendix B of Volume I):

Scenario II: Terminal Departure Sector

Scenario V: Terminal Arrival Sector

Appendix B in Volume I of this series contains the background description of each scenario, the baseline scenarios from which the present expansion was produced, and the map of the fictitious airspace assumed for these scenarios. The explanation of these scenarios is presented in Section 3.7.6 of Volume I.

The scenarios are expanded by analysis of the baseline scenario data versus the Composition Graphs in Appendix A and the Task Information Requirements in Appendix D, to show in detail how the controller might respond under each applicable scenario in the TAAS time frame. Thus, these expanded scenarios present a solution for each problem posed in the baseline scenarios.

Expanded scenarios in this appendix contain seven columns of data:

Time (in Zulu time reference) for each situation presented

Situation as introduced in the baseline scenario

Controller Task to identify the number and statement of tasks that are pertinent to that situation

Display Output Requirements to identify display output data objects that are pertinent to each scenario task

Source of the listed display outputs

Data Input Requirements to identify controller input data objects that are pertinent to each scenario task

Remarks to explain VSCS actions and other useful information.

Above the last four columns is a line identifying the reference number for the scenario situation being presented. This number is to be used to track scenario situations between baseline and expanded scenario descriptions.

NOTE: Due to the extensive revision of the data in this Appendix, black lines (side bars) in the margins to indicate substantive changes (see Foreword) from the original volume have not been used.

OPERATIONAL SCENARIOS

SCENARIO II: TERMINAL DEPARTURE SECTOR TAAS | **ACTIVITY: II - 1, II - 2, II - 3** | **PAGE 1**

TIME Z	SITUATION	CONTROLLER TASK	DISPLAY OUTPUT REQUIREMENTS	SOURCE	DATA INPUT REQUIREMENTS	REMARKS
1800:00	AIRSPACE INTRUSION BY NON-CONTROLLED OBJECT	A1.3.6.1 OBSERVE AIRSPACE INTRUSION BY A NON-CONTROLLED OBJECT	UNASSOCIATED TARGET SYMBOL	SITUATION DISPLAY,		(II-1)
		A1.1.4.2 INITIATE TRACK MANUALLY		VSCS	TRACK, FLIGHT ID (PSEUDO), COORDINATES	(II-1)
		A1.3.6.2 ENTER CONTROLLER NOTE		CONTROLLER NOTEPAD DISPLAY	FREE TEXT, ENTER CONTROLLER NOTE	(II-1)
		A1.3.6.3 FLIGHT FOLLOW AN OBSERVED NON-CONTROLLED OBJECT	FULL DATA BLOCK, PRIMARY TARGET	SITUATION DISPLAY		(II-1)
1805:00	AIRCRAFT TO EDGE OF SECTOR	A1.4.7.9 DETECT MANUAL HANDOFF MODE INDICATION	FULL DATA BLOCK	SITUATION DISPLAY		(II-2)
		A1.4.7.1 INITIATE HANDOFF FUNCTION			HANDOFF FUNCTION, SECTOR NUMBER, FLIGHT ID	(II-2) HANDOFF AWE110 TO SECTOR 71
		A1.4.7.15 RECEIVE HANDOFF REJECTION		VSCS		(II-2) RECEIVING G/G COMMUNICATIONS (HANDOFF REJECTION FROM SECTOR 71)
		A1.4.7.5 DISCUSS TRANSFER OF CONTROL WITH OTHER CONTROLLER		VSCS		(II-2) RECEIVING G/G COMMUNICATIONS
		A1.4.7.14 REDIRECT HANDOFF			REDIRECT HANDOFF MESSAGE, SECTOR NUMBER, FLIGHT ID	(II-2) HANDOFF AWE110 TO SECTOR 70
		A1.4.7.4 RECEIVE HANOFF ACCEPTANCE	FULL DATA BLOCK, SECTOR NUMBER, HANDOFF ACCEPTANCE	SITUATION DISPLAY		(II-2) HANDOFF ACCEPTANCE FROM SECTOR 70 ON AWE110
1807:00	AMENDED ROUTE/ DESTINATION/ALTITUDE, CLEARANCE DELIVERY	A1.4.1.2 RECEIVE CLEARANCE REQUEST FROM ATCT/FSS/ PILOT/SUPERVISOR		VSCS		(II-3) COMMUNICATING NORMALLY AIR-TO-GROUND (N699LJ)
		A1.4.1.5 REQUEST CLEARANCE/APPROVAL FROM ANOTHER CONTROLLER		VSCS		(II-3) INITIATING G/G COMMUNICATIONS
		A1.4.1.6 RECEIVE CLEARANCE APPROVAL/CLEARANCE RESTRICTION FROM ANOTHER CONTROLLER		VSCS		(II-3) RECEIVING G/G COMMUNICATIONS

OPERATIONAL SCENARIOS

SCENARIO II: TERMINAL DEPARTURE SECTOR TAAS | **ACTIVITY:** II - 3, II - 4 | **PAGE 2**

TIME Z	SITUATION	CONTROLLER TASK	DISPLAY OUTPUT REQUIREMENTS	SOURCE	DATA INPUT REQUIREMENTS	REMARKS
		A1.4.1.75 DETERMINE APPROPRIATE MENTAL PLAN FOR AIRCRAFT CLEARANCE	GEOGRAPHIC MAP, PARTIAL/FULL DATA BLOCKS, FLIGHT DATA ENTRIES	SITUATION DISPLAY, FLIGHT DATA DISPLAY		(II-3)
		A1.4.10.4 FORMULATE A CLEARANCE WITH APPROPRIATE INSTRUCTIONS				II-3) DESIGN A CLEARANCE FOR N699LJ
		A1.4.10 5 ISSUE CLEARANCE AND INSTRUCTIONS TO PILOT		VSCS		(II-3) COMMUNICATING NORMALLY AIR TO-GROUND (N699LJ)
		A1.4 5 3 ENTER FLIGHT PLAN AMENDMENT	FLIGHT DATA ENTRY	MESSAGE COMP-OSITION & RESPONSE DISPLAY, FLIGHT DATA DISPLAY	FLIGHT PLAN AMENDMENT, FLIGHT ID REVISED DATA	(II-3) ENTER ROUTE CHANGE (N699LJ)
		A1.1.6.11 ENTER FDE NOTATIONS		MESSAGE COMP-OSITION & RESPONSE DISPLAY	FDE NOTATION MESSAGE, FLIGHT ID REVISED DATA	(II-3) SPECIAL VFR, OUT OF CONTROL ZONE, ENTER FLIGHT ID (N699LJ)
		A1.1.4.3 OBSERVE AUTOMATIC TRACK START	FULL DATA BLOCK	SITUATION DISPLAY		(II-3)
		A1.3 2.14 DETECT UNREASONABLE MODE C INDICATION	FULL DATA BLOCK, UNREASONABLE MODE C INDICATOR	SITUATION DISPLAY		(II-3) UNREASONABLE ALTITUDE (CLIMBING FASTER THAN ADAPTED VALUE)
		A1.4.10 8 QUERY PILOT REGARDING CONFORMANCE WITH CLEARANCE		VSCS		(II-3) COMMUNICATING NORMALLY AIR-TO-GROUND (N699LJ)
		A1.3 2.2 OBSERVE AIRCRAFT RESUMING NORMAL FLIGHT PLAN	TARGET POSITION SYMBOL	SITUATION DISPLAY		(II-3)
1609:00	HANDOFF RECEIPT, AIRCRAFT TO EDGE OF SECTOR	A1.4.6.1 RECEIVE HANDOFF REQUEST	FULL DATA BLOCK, HANDOFF STATUS INDICATOR	SITUATION DISPLAY		(II-4) SECTOR RECEIVES HANDOFF FROM SECTOR 61 ON N104PG
		A1.4.6.5 DETERMINE RESPONSE TO HANDOFF REQUEST	FULL DATA BLOCK, GEOGRAPHIC MAP, FLIGHT DATA ENTRY	SITUATION DISPLAY, FLIGHT DATA DISPLAY		(II-4)
		A1.4 6 4 ACCEPT AUTOMATIC HANDOFF	(TRANSFORMED) FULL DATA BLOCK	SITUATION DISPLAY	ACCEPT HANDOFF, FLIGHT ID	(II-4) SECTOR 60 ACCEPTS HANDOFF ON N104PG
		A1.4.13 6 RECEIVE INITIAL RADIO CONTACT FROM PILOT		VSCS		(II-4) COMMUNICATING NORMALLY AIR-TO-GROUND (N104PG)

OPERATIONAL SCENARIOS

SCENARIO II: TERMINAL DEPARTURE SECTOR TAAS | **ACTIVITY:** II -1, II - 4, II - 5, II - 6, II - 7 | **PAGE 3**

TIME Z	SITUATION	CONTROLLER TASK	DISPLAY OUTPUT REQUIREMENTS	SOURCE	DATA INPUT REQUIREMENTS	REMARKS
		A1.4.13.7 ISSUE ALTIMETER SETTING	ALTIMETER SETTING	AIRPORT ENVORINMENTAL DATA DISPLAY, VSCS		(II-4) COMMUNICATING NORMALLY AIR-TO-GROUND (ISSUE ALTIMETER SETTING ON N104PG)
		A1.4.13.8 VERIFY AIRCRAFT ALTITUDE		VSCS		(II-4) COMMUNICATING NORMALLY AIR-TO-GROUND (PILOT REPORTED ALTITUDE (N104PG))
		A1.3.5.1 VALIDATE MODE C ALTITUDE	MODE C ALTITUDE, FULL DATA BLOCK	SITUATION DISPLAY		(II-4) COMPARE MODE C ALTITUDE TO REPORT FROM N104PG
1810.00	EXIT OF NON-CONTROLLED AIRCRAFT	A1.5.9.10 OBSERVE AIRCRAFT IN COAST MODE	TRACK STATUS, FULL DATA BLOCK	SITUATION DISPLAY		(II-1)
		A1.1.6.14 DELETE CONTROLLER NOTE	(DELETION) CONTROLLER NOTEPAD DISPLAY	CONTROLLER NOTEPAD DISPLAY		(II-1)
		A1.1.6.3 DELETE FLIGHT DATA ENTRY AND FULL DATA BLOCK FROM ATC SYSTEM	(DELETION) FULL DATA BLOCK, FLIGHT DATA ENTRY	SITUATION DISPLAY, FLIGHT DATA DISPLAY	DELETE NOTE, (PSEUDO) FLIGHT ID	(II-1)
1812.00	SIGMET	A1.5.1.12 RECEIVE WEATHER ADVISORY FROM ANOTHER CONTROLLER/SUPERVISOR/ METEOROLOGIST	SIGMET	VSCS		(II-5) RECEIVE G/G COMMUNICATION (METEOROLOGIST FORWARDS SIGMET)
		A1.3.5.4 PROJECT TRAFFIC SEQUENCE TO ESTABLISH/ MODIFY DEPARTURE FLOW	FULL DATA BLOCK	SITUATION DISPLAY		(II-6)
		A1.4.10.4 FORMULATE A CLEARANCE WITH APPROPRIATE INSTRUCTIONS				(II-6) DESIGN A CLEARANCE FOR ALL AIRCRAFT AFFECTED BY WEATHER
		A1.4.10.5 ISSUE CLEARANCE AND INSTRUCTIONS TO PILOT		VSCS		(II-6) COMMUNICATING NORMALLY AIR-TO-GROUND (N104PG)
		A1.1.6.11 ENTER FDE NOTATIONS	(REVISED) FLIGHT DATA ENTRY	FLIGHT DATA DISPLAY	FLIGHT ID, ENTER FDE NOTATION MESSAGE, REVISED DATA	(II-6)
		A1.4.10.7 VERIFY AIRCRAFT COMPLIANCE WITH CLEARANCE	FULL DATA BLOCK	FLIGHT DATA DISPLAY		(II-6)
1818.00	PIREP	A1.5.1.8 RECEIVE PIREP ON WEATHER		VSCS		(II-7) COMMUNICATING NORMALLY AIR-TO-GROUND (PIREP FROM N645G)

OPERATIONAL SCENARIOS

SCENARIO II: TERMINAL DEPARTURE SECTOR TAAS | **ACTIVITY: II - 7, II - 8, II - 9** | **PAGE 4**

TIME Z	SITUATION	CONTROLLER TASK	DISPLAY OUTPUT REQUIREMENTS	SOURCE	DATA INPUT REQUIREMENTS	REMARKS
		A1.4.1.2 RECEIVE CLEARANCE REQUEST FROM ATC/FSS/ PILOT SUPERVISOR		VSCS		(II-7) COMMUNICATING NORMALLY AIR-TO-GROUND (CLEARANCE REQUEST FROM N645G)
		A1.4.1.5 REQUEST CLEARANCE/APPROVAL FROM ANOTHER CONTROLLER		VSCS		(II-7) INITIATING G/G COMMUNICATIONS (CLEARANCE COORDINATED WITH SECTOR 61
		A1.4.10.4 FORMULATE A CLEARANCE WITH APPROPRIATE INSTRUCTIONS				(II-7) DESIGN A CLEARANCE FOR N645G
		A1.4.10.5 ISSUE A CLEARANCE AND INSTRUCTIONS TO PILOT		VSCS		(II-7) COMMUNICATING NORMALLY AIR-TO-GROUND (ISSUE CLEARANCE TO N645G)
		A1.4.5.3 ENTER FLIGHT PLAN AMENDMENT	FLIGHT DATA ENTRY	FLIGHT DATA DISPLAY	FLIGHT PLAN AMENDMENT, FLIGHT DATA (REVISED), FLIGHT ID	(II-7) DESTINATION CHANGE FOR N645G
		A1.4.4.14 ENTER SCRATCH PAD DATA IN FULL DATA BLOCK	FULL DATA BLOCK, SCRATCH PAD DATA	SITUATION DISPLAY	SCRATCH PAD, TEXT, FLIGHT ID	(II-7) ARRIVAL RUNWAY/AIRPORT IN SCRATCH PAD, N645G
		A1.5.1.81 FORWARD URGENT PIREP TO OTHER CONTROLLER		VSCS		(II-7) INITIATING G/G COMMUNICATIONS (DISTRIBUTE PIREP TO OTHER POSITIONS THAT NEED INFORMATION)
1821:00	RUNWAY CONFIGURATION CHANGE	A1.5.2.9 RECEIVE RUNWAY USE DATA	DEPARTURE & ARRIVAL ROUTES, ACTIVE RUNWAYS, ACCEPTANCE RATE, RUNWAY ALERT DATA, ATIS CHARACTER, ATIS MESSAGE	AIRPORT ENVIRONMENTAL DISPLAY DATA		(II-8) ESB SUPERVISOR FORWARDS RUNWAY CHANGE
		A1.4.4.14 ENTER SCRATCH PAD DATA IN FULL DATA BLOCK	DEPARTURE LIST	FLIGHT DATA DISPLAY	SCRATCH PAD, TEXT, FLIGHT ID	(II-8) REVISE DEPARTURE RELATED DATA IN SCRATCH PAD OF AFFECTED AIRCRAFT
1823:00	AIRSHOW	A1.4.3.1 PERCEIVE PRESENCE OF SPECIAL OPERATION	FLIGHT ID, FULL DATA BLOCK & FLIGHT DATA ENTRY (REMARKS), SPECIAL ACTIVITIES	SITUATION DISPLAY, FLIGHT DATA DISPLAY, SYSTEM STATUS DATA DISPLAY		(II-9)

OPERATIONAL SCENARIOS

SCENARIO 8: TERMINAL DEPARTURE SECTOR TAAS | **ACTIVITY: II - 9, II - 10** | **PAGE 5**

TIME Z	SITUATION	CONTROLLER TASK	DISPLAY OUTPUT REQUIREMENTS	SOURCE	DATA INPUT REQUIREMENTS	REMARKS
		A1.4.3.3 FORWARD NOTICE OF SPECIAL OPERATIONS TO ANOTHER CONTROLLER/ SUPERVISOR		VSCS		(II-9) INITIATING G/G COMMUNICATIONS (FORWARD AIRSHOW DATA TO SUPERVISOR)
		A1.1.4.3 OBSERVE AUTOMATIC TRACK START	FULL DATA BLOCK	SITUATION DISPLAY		(II-9) AIRCRAFT IN AIRSHOW ARE OBSERVED UPON DEPARTURE
		A1.2.1.1 DETECT AIRCRAFT CONFLICT ALERT INDICATION	CA ALERT INDICATOR, FULL DATA BLOCK	ALERT & RESOLUTION DISPLAY, SITUATION DISPLAY		(II-9) AIRSHOW AIRCRAFT JOIN INTO ONE FLIGHT
		A1.2.5.2 SUPPRESS CONFLICT ALERT FOR PAIRED AIRCRAFT			CA SUPPRESSION, FLIGHT ID(S)	(II-9) CONFLICT ALERT IS SUPPRESSED FOR AIRCRAFT IN AIRSHOW
		A1.2.5.5 SUPPRESS MSAW FUNCTION FOR AN AIRCRAFT			MSAW SUPPRESSION, FLIGHT ID	(II-9) MSAW IS SUPPRESSED FOR AIRCRAFT IN AIRSHOW
1824:00	FILED FLIGHT PLAN, CLEARANCE DELIVERY	A1.4.4.6 RECEIVE FLIGHT PLAN FROM PILOT		VSCS		(II-10) COMMUNICATING NORMALLY AIR-TO-GROUND (FLIGHT PLAN ON N294NJ)
		A1.4.4.2 REVIEW FLIGHT PLAN FOR COMPLETENESS				(II-10)
		A1.4.4.3 ENTER FLIGHT PLAN			FLIGHT PLAN DATA, FLIGHT PLAN FUNCTION	(II-10) FLIGHT PLAN ON N294NJ IS ENTERED INTO SYSTEM
		A1.4.1.16 FORMULATE CONTROLLER PLAN OF ACTION FOR CLEARANCE GENERATION				(II-10)
		A1.4.10.4 FORMULATE A CLEARANCE WITH APPROPRIATE INSTRUCTIONS				(II-10) DESIGN A CLEARANCE FOR N294NJ
		A1.4.10.5 ISSUE CLEARANCE AND INSTRUCTIONS TO PILOT		VSCS		(II-10) COMMUNICTING NORMALLY AIR-TO-GROUND (ISSUE CLEARANCE TO N294NJ)
		A1.4.10.7 VERIFY AIRCRAFT COMPLIANCE WITH CLEARANCE	FULL DATA BLOCK, TARGET POSITION SYMBOL	SITUATION DISPLAY		(II-10)

OPERATIONAL SCENARIOS

SCENARIO II: TERMINAL DEPARTURE SECTOR TAAS | **ACTIVITY:** II - 11 | **PAGE 6**

TIME Z	SITUATION	CONTROLLER TASK	DISPLAY OUTPUT REQUIREMENTS	SOURCE	DATA INPUT REQUIREMENTS	REMARKS
1625:00	AIRCRAFT EMERGENCY-AIRBORNE	A1.4.2.2 RECEIVE NOTICE OF PILOT OR AIRCRAFT HAVING A PROBLEM (E.G., OVERDUE, LOSS OF RADIO CONTACT)	AIRCRAFT SPECIAL CONDITION (FULL DATA BLOCK), FLIGHT DATA ENTRY	SITUATION DISPLAY, FLIGHT DATA ENTRY		(II-11) RECEIVING G/G COMMUNICATIONS (SECTOR 90 REPORTS AN EMERGENCY ON M12345)
		A1.4.2.6 INFORM DESIGNATED PERSONNEL OF AIRCRAFT HAVING FLIGHT PROBLEMS		VSCS		(II-11) INITIATING G/G COMMUNICATIONS (INFORM OTHERS OF EMERGENCY M12345)
		A1.3.1.8 RECEIVE SUPERVISOR NOTICE TO HOLD/REROUTE TRAFFIC CLEAR OF CONTINGENCY		VSCS		(II-11) RECEIVING G/G COMMUNICATIONS (SUPERVISOR ASSISTS IN EMERGENCY)
		A1.3.4.4 REQUEST AIRCRAFT BE REROUTED	FLIGHT DATA ENTRY, FULL DATA BLOCK, DEPARTURE LIST	FLIGHT DATA DISPLAY SITUATION DISPLAY, SPECIAL LISTS, VSCS		(II-11) INITIATING G/G COMMUNICATIONS (REQUEST ESB CLEAR THE AREA)
		A1.3.1.3 DISCUSS DISCONTINUANCE OF TRAFFIC MANAGEMENT RESTRICTION/ TRAFFIC REROUTE WITH SUPERVISOR		VSCS		(II-11) INITIATING G/G COMMUNICATIONS (SUPERVISOR RELEASES DEPARTURES AFTER EMERGENCY IS RESOLVED)
1630:00	SCENARIO ENDS					

IXOT/FAA/AP-01/VOL#4)
CHG 1 29 July 1988

OPERATIONAL SCENARIOS

SCENARIO V: TERMINAL ARRIVAL SECTOR TAAS | **ACTIVITY:** V - 1, V - 2 | **PAGE 1**

TIME Z	SITUATION	CONTROLLER TASK	DISPLAY OUTPUT REQUIREMENTS	SOURCE	DATA INPUT REQUIREMENTS	REMARKS
2103:00	MINIMUM SAFE ALTITUDE WARNING	A1.2.2.1 DETECT MSAW INDICATION OR ALARM	EMPHASIZED MSAW INDICATOR IN FDB AND FDE, EMPHASIZED FLID IN A&R DISPLAY	SITUATION DISPLAY, FLIGHT DATA DISPLAY, ALERT & RESOLUTON DISPLAY		(V-1) MSAW ALERT ON N345GJ
		A1.2.2.6 DETERMINE VALIDITY OF MSAW NOTICE OR INDICATON	GEOGRAPHIC MAP DATA, FULL DATA BLOCK	SITUATION DISPLAY		(V-1)
		A1.2.4.3 FORMULATE ADVISORY/SAFETY ALERT CONTENT				(V-1) DESIGN A SAFETY ALERT FOR N345GJ
		A1.2.4.12 ISSUE SAFETY ALERT WITH REGARD TO MINIMUM ALTITUDE		VSCS		(V-1) COMMUNICATING NORMALLY AIR-TO-GROUND, ISSUE SAFETY ALERT TO N345GJ
		A1.2.4.4 DETECT AIRCRAFT MANEUVER IN RESPONSE TO ADVISORY/ALERT	FULL DATA BLOCK (HISTORY), TARGET POSITION SYMBOL	SITUATON DISPLAY		(V-1)
2106:00	POSITION RELIEF	A1.6.1.1 BRIEF RELIEVING CONTROLLER	BRIEFING CHECKLIST	ALL DISPLAYS	DISPLAY CONTROL	(V-2) CONTROLLER 1 (RELIEVED CONTROLLER
		A1.6.2.1 REVIEW SYSTEM STATUS TO DETERMINE CURRENCY/UPDATE SELF		ALL DISPLAYS		(V-2) CONTROLLER 2 (RELIEVING CONTROLLER)
		A1.6.2.2 REVIEW CURRENT & PROJECTED TRAFFIC STATUS/WEATHER	FLIGHT DATA ENTRY, FULL DATA BLOCK, WEATHER	SITUATION DISPLAY, FLIGHT DATA DISPLAY, WEATHER DISPLAY		(V-2) CONTROLLER 2
		A1.6.2.8 REVIEW BRIEFING CHECKLIST/NOTES TO ASSURE COMPLETENESS OF BRIEFING COVERAGE	BRIEFING CHECKLIST	STATIC INFORMATION DISPLAY		(V-2) CONTROLLER 2
		A1.6.2.10 DETERMINE IF READY TO ACCEPT CONTROL RESPONSIBILITY				(V-2) CONTROLLER 2
		A1.6.1.2 SIGN OFF AT CONSOLE			SIGN OFF, USER ID	(V-2) CONTROLLER 1
		A1.6.2.4 SIGN ON AT DESIGNATED CONSOLE			SIGN OFF, USER ID	(V-2) CONTROLLER 2

OPERATIONAL SCENARIOS

SCENARIO V: TERMINAL ARRIVAL SECTOR TAAS | **ACTIVITY:** V - 2, V - 3 | **PAGE 2**

TIME Z	SITUATION	CONTROLLER TASK	DISPLAY OUTPUT REQUIREMENTS	SOURCE	DATA INPUT REQUIREMENTS	REMARKS
		A1.6.1.3 VERIFY COMPLETENESS RELIEF BRIEFING RECEIPT	BRIEFING CHECKLIST	ALL DISPLAYS		(V-2) CONTROLLER 1
		A1.6.2.6 CHECK WORKSTATION FOR PROPER CONFIGURATION, USABILITY, AND SATISFACTORY STATUS	ALL DATA	ALL DISPLAYS		(V-2) CONTROLLER 2
		A1.6.2.9 REQUEST IMPLEMENTATION OF PROGRAMMED PERSONAL PREFERENCE ADJUSTMENTS	ALL DATA	ALL DISPLAYS	DISPLAY PREFERENCE IDENTIFIER, DISPLAY/INVOKE DISPLAY PREFERENNCE SET MESSAGE	(V-2) CONTROLLER 2
2109:00	CONTROLLER OVERLOAD	A1.6.8.1 DETERMINE IMPENDING CONTROLLER OVERLOAD		ALL DISPLAYS		(V-2)
		A1.6.8.3 REQUEST ASSISTANCE OR RELIEF		VSCS		(V-2) INITIATING G/G COMMUNICATIONS (CONTROLLER TO SUPERVISOR)
		A1.3.4.4 REQUEST AIRCRAFT BE REROUTED		VSCS		(V-2) INITIATING G/G COMMUNICATIONS (TRAFFIC MOVED TO ANOTHER ARRIVAL FIX)
2111:00	LAW ENFORCEMENT	A1.4.1.2 RECEIVE CLEARANCE REQUEST FROM ATC/FSS/ PILOT/SUPERVISOR		VSCS		(V-3) COMMUNICATING NORMALLY AIR-TO-GROUND (SKY WATCH I, REQUEST CLEARANCE)
		A1.1.3.1 SEARCH DISPLAY FOR INACTIVE FLIGHT PLAN ON CLEARANCE REQUEST	FLIGHT DATA ENTRY	FLIGHT DATA DISPLAY		(V-3) SKY WATCH I
		A1.4.4.6 RECEIVE FLIGHT PLANS FROM PILOT		VSCS		(V 3) COMMUNICATING NORMALLY AIR-TO-GROUND (SKY WATCH I)
		A1.4.4.3 ENTER FLIGHT PLAN			FLIGHT PLAN FUNCTION, CALLSIGN, BEACON CODE	(V-3) SKY WATCH I
		A1.4.1.16 FORMULATE CONTROLLER PLAN OF ACTION FOR CLEARANCE GENERATION				(V-3)

OPERATIONAL SCENARIOS

SCENARIO V: TERMINAL ARRIVAL SECTOR TAAS | **ACTIVITY:** V - 3, V - 4, V - 5 | **PAGE 3**

TIME Z	SITUATION	CONTROLLER TASK	DISPLAY OUTPUT REQUIREMENTS	SOURCE	DATA INPUT REQUIREMENTS	REMARKS
		A1.4.10.4 FORMULATE A CLEARANCE WITH APPROPRIATE INSTRUCTIONS				(V-3) DESIGN A CLEARANCE FOR SKY WATCH I
		A1.4.10.5 ISSUE CLEARANCE AND INSTRUCTIONS TO PILOT		VSCS		(V-3) COMMUNICATING NORMALLY AIR-TO-GROUND (SKY WATCH I)
		A1.1.4.3 OBSERVE AUTOMATIC TRACK START	FULL DATA BLOCK	SITUATION DISPLAY		(V-3) SKY WATCH I
		A1.4.3.3 FORWARD NOTICE OF SPECIAL OPERATIONS TO ANOTHER CONTROLLER/ SUPERVISOR		VSCS		(V-3) INITIATING G/G COMMUNICATIONS, SUPERVISOR ADVISED OF SKY WATCH I
211500	RADAR SURVEILLANCE SENSOR FAILURE	A1.6.13.3 PERCEIVE TRACKING OR TRANSPONDER FAILURE	COAST TRACK INDICATOR, FULL DATA BLOCK	SITUATION DISPLAY		(V-4)
		A1.6.13.4 FORWARD NOTICE OF RADAR SENSOR STATUS TO ANOTHER CONTROLLER/ SUPERVISOR		VSCS		(V-4) INITIATING G/G COMMUNICATIONS, SECTOR 75 ADVISED OF RADAR STATUS
		A1.6.9.1 INFORM PILOT OF RADAR CONTACT LOST		VSCS		(V-4) COMMUNICATING NORMALLY AIR-TO-GROUND (ALL AIRCRAFT)
		A1.6.13.2 RECEIVE PROCEDURES TO BE USED TO ACCOMODATE SENSOR OUTAGE		VSCS		(V-4) RECEIVING G/G COMMUNICATIONS (SUPERVISORY ASSISTANCE)
		A1.6.9.9 REQUEST PILOT POSITION REPORTS		VSCS		(V-4) COMMUNICATING NORMALLY AIR-TO-GROUND (ALL AIRCRAFT)
211700	RADAR SURVEILLANCE SENSOR FAILURE	A1.1.2.1 OBSERVE DISPLAY OF NEW/CHANGED EQUIPMENT/OPERATIONAL STATUS	EMPHASIZED EQUIPMENT STATUS	SYSTEM STATUS DATA DISPLAY		(V-5) SUPERVISOR CHANGED TO BACK-UP RADAR CHANNEL
		A1.6.13.1 RECEIVE NOTICE OF RADAR SENSOR STATUS		VSCS		(V-5) RECEIVING G/G COMMUNICATIONS (SUPERVISOR FORWARDS NOTICE OF RADAR CHANNEL)
		A.6.9.9 OBSERVE RETURN OF NORMAL RADAR ENVIRONMENT	FULL DATA BLOCKS	SITUATION DISPLAY		(V-5)
		A1.6.9.3 OBSERVE DATA BLOCK NOT ASSOCIATED WITH TARGET	FULL DATA BLOCK, NON-CONFORMANCE INDICATOR	SITUATION DISPLAY		(V-5)

OPERATIONAL SCENARIOS

SCENARIO V: TERMINAL ARRIVAL SECTOR TAAS | **ACTIVITY:** V - 5, V - 6, V - 7, V - 8 | **PAGE 4**

TIME Z	SITUATION	CONTROLLER TASK	DISPLAY OUTPUT REQUIREMENTS	SOURCE	DATA INPUT REQUIREMENTS	REMARKS
		A1.6.9.2 REASSOCIATE DATA BLOCK	FULL DATA BLOCK	SITUATION DISPLAY	TRACK REPOSITION, FLIGHT ID, NEW COORDINATE POSITION	(V-5)
		A1.4.14.2 INFORM PILOT THAT RADAR CONTACT IS ESTABLISHED				(V-5) COMMUNICATING NORMALLY AIR-TO-GROUND (ALL AIRCRAFT)
		A1.6.9.7 INITIATE USE OF RADAR SEPARATION STANDARDS		VSCS		(V-5)
2120:00	SPECIAL INTEREST FLIGHT	A1.4.3.1 PERCEIVE PRESENCE OF SPECIAL OPERATIONS	CALLSIGN, FULL DATA BLOCK, FLIGHT DATA ENTRY	SITUATION DISPLAY		(V-6) AIR FORCE ONE
		A1.4.3.3 FORWARD NOTICE OF SPECIAL OPERATION TO ANOTHER CONTROLLER/ SUPERVISOR		VSCS		(V-6) INITIATING G/G COMMUNICATIONS (SECTOR 75 HANDS OFF AIR FORCE ONE TO SECTOR 61)
2122:00	AIRCRAFT EMERGENCY-AIRBORNE	A1.4.2.2 RECEIVE NOTICE OF PILOT OR AIRCRAFT HAVING A PROBLEM (E.G. OVERDUE, LOSS OF RADIO CONTACT)		VSCS		(V-7) COMMUNICATING NORMALLY AIR-TO-GROUND (AIR FORCE ONE ADVISES OF FIRE IN #2 ENGINE)
		A1.4.2.5 FORWARD CONTINGENCY INFORMATION TO SUPERVISOR/ANOTHER CONTROLLER		VSCS		(V-7) INITIATING G/G COMMUNICATIONS (ADVISE SUPERVISOR OF FIRE)
		A1.4.2.11 RECEIVE SUPERVISOR NOTICE OF EMERGENCY DECLARED AND CONTINGENCY PLAN INVOKED		VSCS		(V-7) RECEIVING G/G COMMUNICATIONS (SUPERVISOR INITIATES EMERGENCY ACTION)
2123:00	ENTERING/LEAVING AIRBORN HOLD	A1.3.1.8 RECEIVE SUPERVISOR NOTICE TO HOLD/ REROUTE TRAFFIC CLEAR OF CONTINGENCY		VSCS		(V-7) RECEIVING G/G COMMUNICATIONS (SUPERVISOR ASSISTS IN EMERGENCY)
		A1.3.1.1 EVALUATE TRAFFIC MANAGEMENT CONTRAINTS FOR EFFECT ON TRAFFIC FLOW	FULL DATA BLOCK, INBOUND LIST, FLIGHT DATA ENTRY	SITUATION DISPLAY, FLIGHT DATA DISPLAY SPECIAL LISTS		(V-8) REPEAT SEQUENCE FOR EACH AIRCRAFT IN SECTOR

OPERATIONAL SCENARIOS

SCENARIO V: TERMINAL ARRIVAL SECTOR TAAS | **ACTIVITY:** V - 8 | **PAGE 5**

TIME Z	SITUATION	CONTROLLER TASK	DISPLAY OUTPUT REQUIREMENTS	SOURCE	DATA INPUT REQUIREMENTS	REMARKS
		A1.3.1.4 REVIEW OPTIONS TO BRING AIRCRAFT INTO CONFORMANCE WITH TRAFFIC MANAGEMENT RESTRICTIONS	HOLDING PATTERNS, GEOGRAPHIC MAP DATA	SITUATION DISPLAY		(V-8)
		A.1.3.1.2 CHOOSE OPTION TO BRING AIRCRAFT INTO CONFORMANCE WITH TRAFFIC MANAGEMENT RESTRICTIONS				(V-8) ALL AIRCRAFT INBOUND TO ESB WILL BE HELD
		A1.4.10.4 FORMULATE A CLEARANCE WITH APPROPRIATE INSTRUCTIONS				(V-8) DESIGN A HOLD CLEARANCE FOR ALL AIRCRAFT
		A1.4.10.5 ISSUE CLEARANCE AND INSTRUCTIONS TO PILOT		VSCS		(V-8) COMMUNICATING NORMALLY AIR-TO-GROUND (ISSUE HOLD CLEARANCE TO ALL AIRCRAFT)
2129:00	ENTERING/LEAVING AIRBORNE HOLD	A1.1.6.11 ENTER FDE NOTATIONS	FLIGHT DATA ENTRY	FLIGHT DATA DISPLAY	FDEN, FLIGHT ID	(V-8) ENTER HOLD INTO SYSTEM
		A1.3.4.1 DETERMINE DESCENT TIME OR POINT	FULL DATA BLOCK, AIRPORT, GEOGRAPHIC MAP DATA	SITUATION DISPLAY		(V-8)
		A1.3.4.2 PROJECT TRAFFIC SEQUENCE TO ESTABLISH/ MODIFY APPROACH FLOW TO AIRPORT OR SECTOR				(V-8)
		A1.4.10.4 FORMULATE A CLEARANCE WITH APPROPRIATE INSTRUCTIONS				(V-8) DESIGN CLEARANCES TO RELEASE AIRCRAFT FROM HOLD AND CONTINUE ON APPROACH PATH
		A1.4.10.5 ISSUE CLEARANCE AND INSTRUCTIONS TO PILOT		VSCS		(V-8) COMMUNICATING NORMALLY AIR-TO-GROUND (ISSUE CLEARANCES TO AIRCRAFT)
		A1.1.6.11 ENTERING FDE NOTATIONS	FLIGHT DATA ENTRY	SITUATION DISPLAY	FDEN, FLIGHT ID	(V-8) UPDATE THE SYSTEM
		A1.6.9.2 REASSOCIATE DATA BLOCK	TARGET POSITION	FLIGHT DATA DISPLAY	REASSOCIATE DATA BLOCK MESSAGE, FLIGHT ID	(V-8) UPDATE TRACKING ON AIRCRAFT WITHOUT DISCRETE BEACON
2130:00	SCENARIO ENDS					